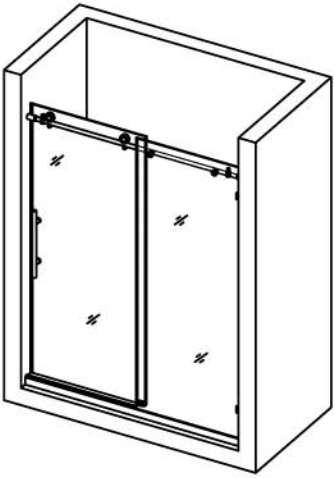

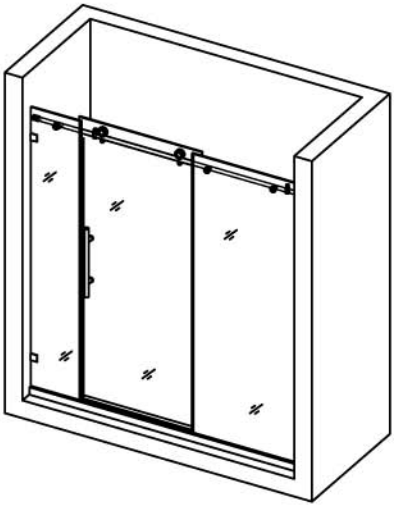

INSTALLATION INSTRUCTIONS

SHOWER DOORS • TUB DOORS

MODELS:

TUB DOORS: LBTDC6062

SHOWER DOORS: LBSDC4876
LBSDC6076
LBSDC7276

PREPARATION

1. After opening all boxes and packages, read this introduction carefully. Check that all of the needed parts are included in the package by marking all the components on the "Detailed Diagram of Shower Door Components". Examine boxes and packages for shipping damage. If the unit has been damaged, has a finishing defect, or is missing parts, please contact our customer support department to be served immediately. Please note that LessCare will not replace any damaged products or missing parts free of charge after 5 business days or if the product has been installed. Feel free to contact LessCare if you have any questions.

2. Please note that you should consult your local building codes with questions on installation compliance standards. Building and plumbing codes may vary by location, and LessCare is not responsible for code compliance standards for your project and will not accept any returns.

3. Prior to installation, ensure that the installation surface is leveled and solid and will be able to support the total weight of the unit. Also, make sure the walls are at the right angles. Irregular installation surface level or improper angle of side walls will result in serious problems during installation. Please, note that some adjustments and drilling might be necessary during the installation process.

4. **NOTE!** This door does not have out-of-plumb adjustment. Make sure your walls are at right angles.

5. This door requires a minimum 23/4" wide threshold, base or installation space. Please note that Step 6 calls for installation of the door to the wall using anchors. However, the manufacturer strongly recommends installing these heavy doors to the studs or to preinstalled 2" x 6" wood reinforcements behind the wall and attach the Wall brackets to it.

Attention: This door is extremely heavy and requires professional installation. Instructions are given for the shower door installation. Please, follow the same instructions to install the tub door.

TOOLS REQUIRED

NOTE: Unpack your unit carefully and inspect it. Lay it out and identify all parts using parts diagram and part list in your manual as a reference. Before discarding the carton, check for small hardware bags that tend to fall to the bottom of the box. If any parts are damaged or missing, please contact the retail store where you have purchased the product.

SHOWER DOOR COMPONENTS

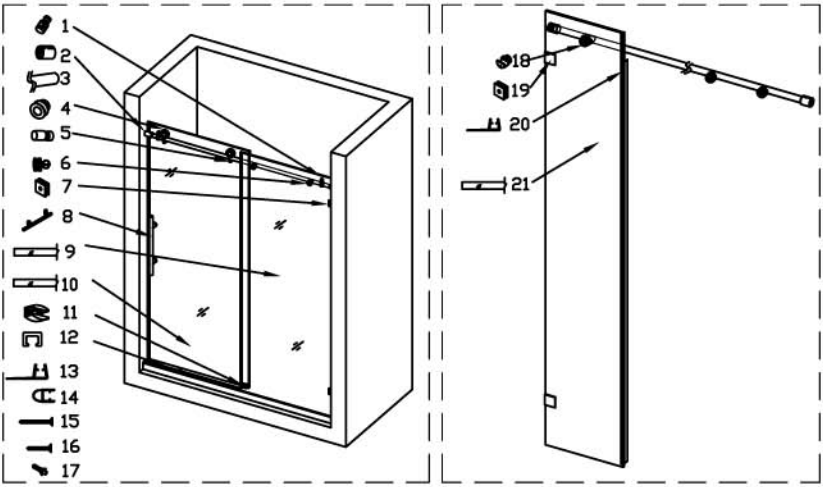

1	Glass Door Stopper	2 pcs
2	Guide Rail Bracket	2 pcs
3	Upper Guide Rail	1 pc
4	Roller	2 pcs
5	Safety Pin	2 pcs
6	Glass Bracket	2 pcs
7	Wall Mount Clip	2 pcs
8	Handle	1 pc
9	Fixed Glass	1 pc
10	Glass Door	1 pc

11	Guide Block	1 pc
12	Anti-Splash Aluminum Threshold	1 pc
13	Side Anti-Water Strip	1 pc
14	A-shape Strip	1 pc
15	Countersunk Screw M4X45	4 pcs
16	Countersunk Screw M4X25	2 pcs
17	Wall Anchor	6 pcs
18	Glass Bracket for Small Fixed Glass	1 pc
19	Wall Mount Clip	2 pcs
20	Side Anti-Water Strip	1 pc
21	Small Fixed Glass	1 pc

RETAIN THESE INSTALLATION INSTRUCTIONS FOR FUTURE REFERENCE!

INSTALLATION INSTRUCTION

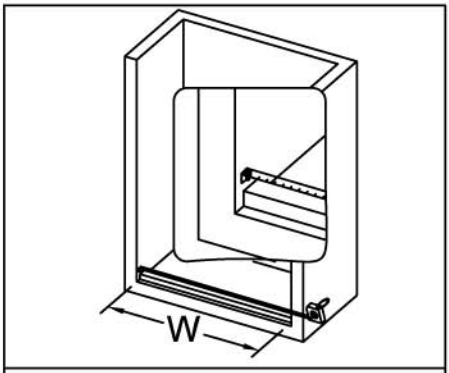

Figure 1

A. Measure the distance between two finished walls with tape measurement tool. That distance on the scheme is marked as "W".

*See **Figure 1** for details.*

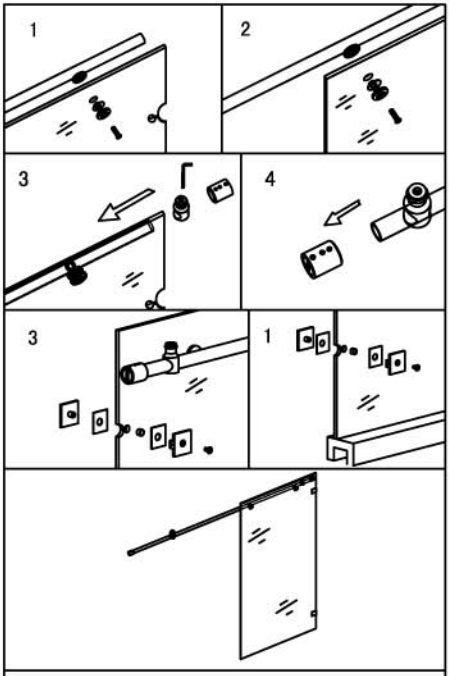

Figure 3

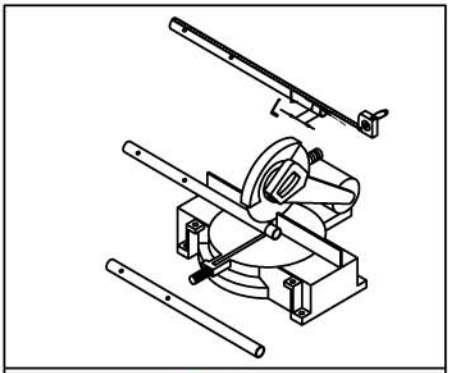

Figure 2

B. Your upper guide rail (3) and anti-splash aluminum threshold (12) have been precut for your shower model opening width: 48" or 60". If W-width of your wall to wall opening is equal to the size of your shower model, it is not necessary to cut the guide rail and you can continue to step C.

If W width of your wall to wall opening is less than the size of your shower model, you will need to cut the guide rail (from the the end which is father from the **glass bracket (6)**. The end to cut off will be L:
L= Subtract W from the size of your shower model .

*See **Figure 2** for details.*

Example: If the wall opening W=47".
Your shower door width is 48".
L=48"- 47"=1". You have to cut 1" off from the **upper guide rail and the anti-splash aluminum threshold.**

C. Install the **upper guide rail (3)** onto the **fixed glass (9)** with the **glass brackets (6)** and tighten the set screws.
Slide the **glass door stopper (1)** on each end of the **upper guide rail (3)** and secure them temporarily.
Slide the **guide rail bracket (2)** on each end of the **upper guide rail (3)** and secure them temporarily as well.
Install the **wall mount clip (7)** to the **fixed glass (9)**.
*See **Figure 3** for details.*

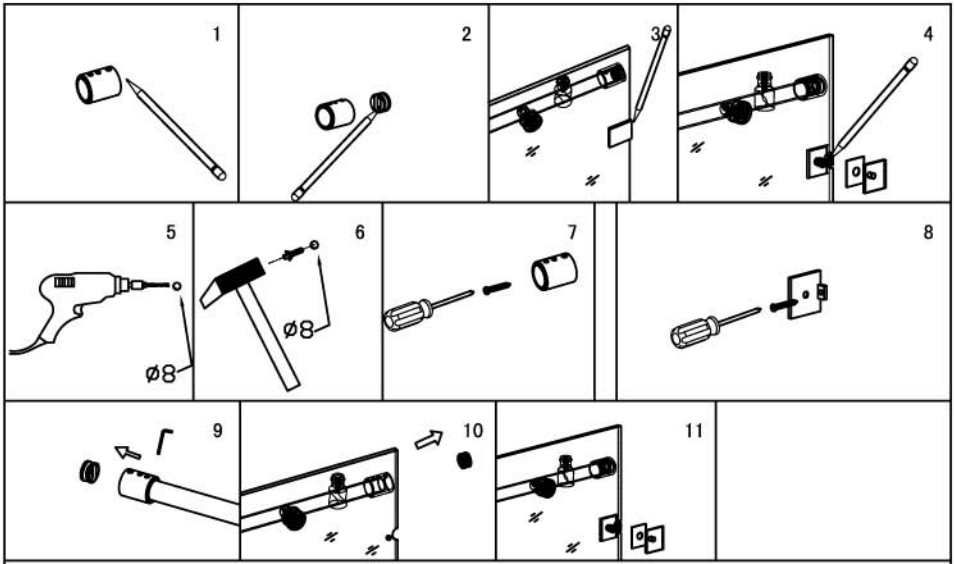

Figure 4

D. Place the **fixed glass (9)** onto the shower base or shower tray and butt it against the wall. Make sure the **fixed glass (9)** and the **upper guide rail (3)** are level. If a horizontal adjustment is required, adjust it in the **glass brackets (6)**.
Outlide the **guide rail brackets (2)** position and the **wall mount clip (7)** position on the wall. Put the **fixed glass (9)** aside.
Remove the **guide rail brackets (2)** from the **upper guide rail (3)** and place bracket to the outlined positions and mark the drilling holes. Now drill the holes with drill bit (Φ8mm) and insert the **wall anchor (17)**. Mount the **guide rail bracket (2)** to the wall with **countersunk screw M4x45 (15)**.
Remove the **wall mount clip (7)** from the fixed glass and place the part with screw hole to the outlined positions and mark the drilling hole. Now drill the holes with drill bit (Φ8mm) and insert the **wall anchor (17)**. Mount the wall mount clip with hole to the wall with **countersunk screw M4x45 (15)**.

*See **Figure 4** for details.*

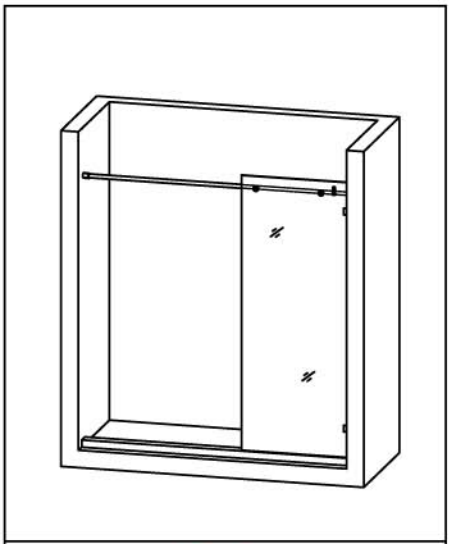

Figure 4

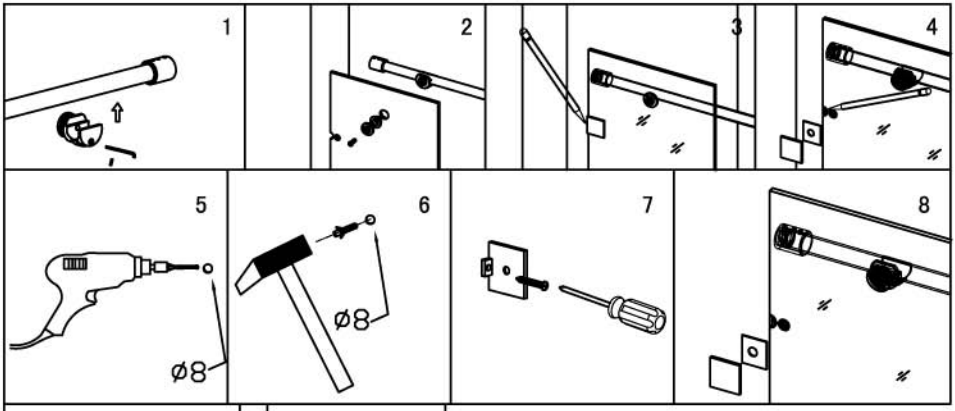

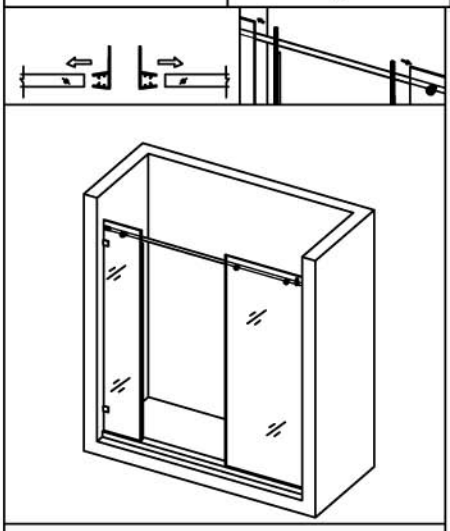

Figure 5

E. If the width of your door is 72" and you need to install the door with the small fixed glass (21). Attached the glass bracket for the small fixed glass (18) to the upper guide rail (3), install the wall mount clip (19) to the small fixed glass (21), outline the position of the wall mount clip (19), set the glass aside, now mark down the drilling hole and drill the hole with drill bit (Φ8mm) and insert the wall anchor (17). Install the wall mount clip (19) to the wall and secure it with screw
Insert the side anti-water strip (13) (20) to the two fixed glasses.
*See **Figure 5** for details.*

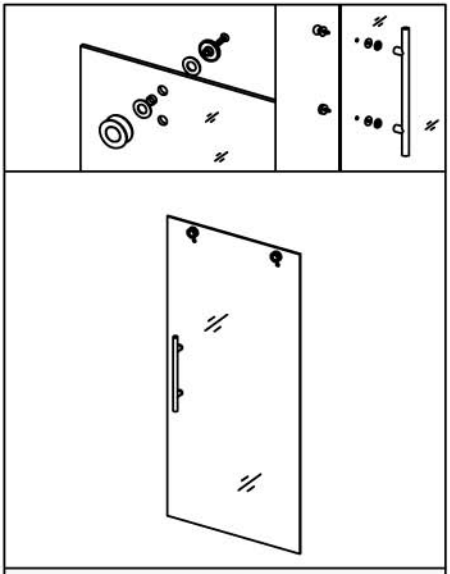

Figure 6

F. Attach the **rollers (4)** to the **glass door (10)**. Install the **handle (8)** to the **glass door (10).**
*See **Figure 6** for details.*

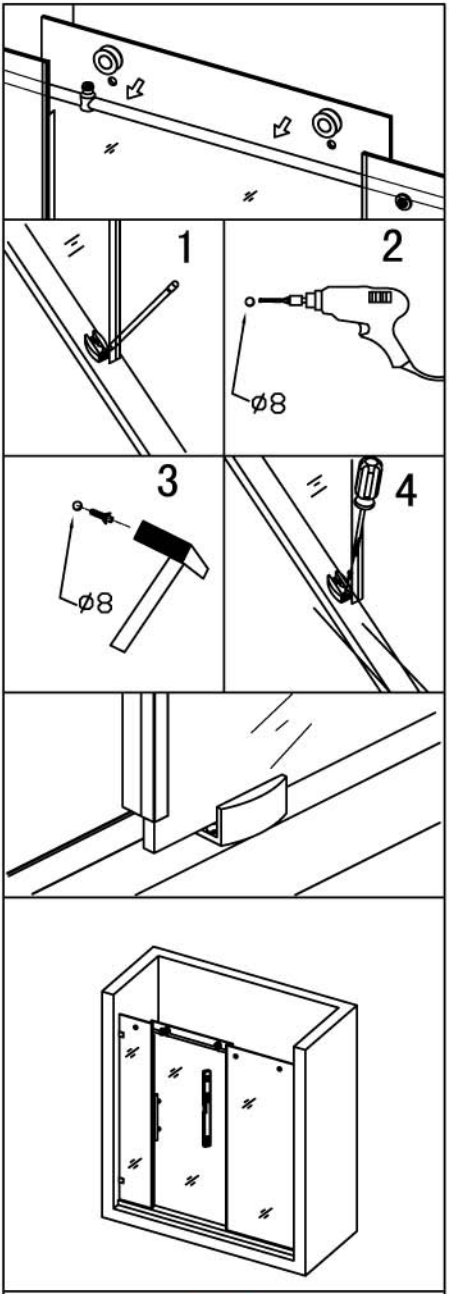

Figure 7

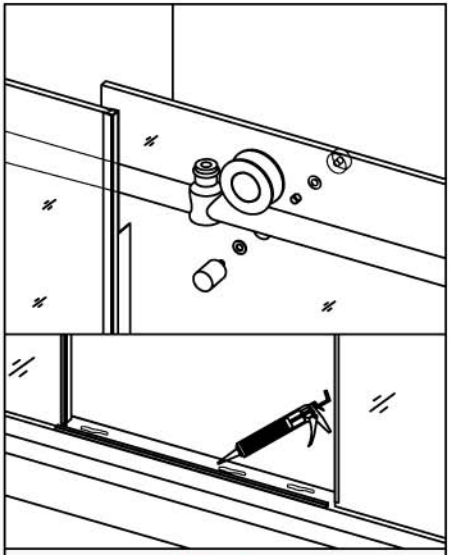

Figure 8

G. Put the **glass door (10)** back to the upper guide rail (3) and install the **safety pin (5)** under the guide rail. Put the **anti-splash aluminum threshold (12)** in front of the glass door (10) and secure it to the floor with silicone.
Note: Adjust the fasteners on both **rollers (4)** to ensure that the bottom edge of the **glass door (10)** will not touch the bottom of the **guide block (11)**.
*See **Figure 8** for details.*

G. Suspend the **glass door (10)** by hanging the **rollers (4)** onto the **upper guide rail (3)**. Slide the guide block (11) to the bottom edge of the **glass door (10)**, make sure the **guide block (11)** is at the central position of the **glass door (10)**. Now, outline the position of the **guide block (11)**, put the glass door aside and mark down the drill hole for drilling.
Drill the hole with with drill bit (Φ8mm) and insert the **wall anchor (17)**, fasten the **guide block (11)** to the floor with the **countersunk screw M4x25 (16)**.

*See **Figure 7** for details.*

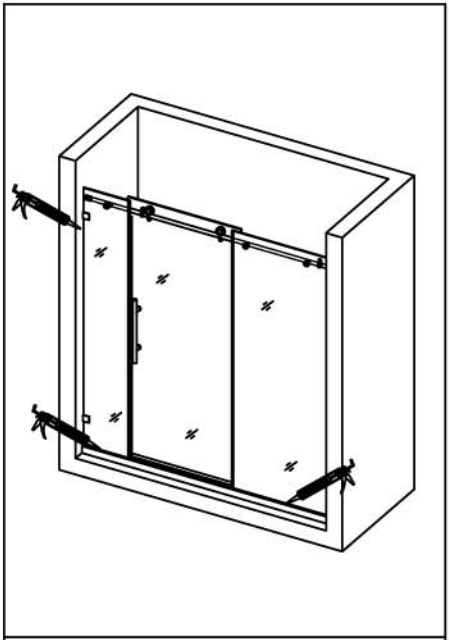

Figure 9

H. Apply silicone along the connection of the fixed glass and the wall.

WAIT 24 HOURS BEFORE USING THE SHOWER ENCLOSURE

*See **Figure 9** for details.*

PRODUCT MAINTENANCE

To ensure long lasting life of your glass shower products, wipe them off after each use with a soft cloth. Rinse and wipe off the glass using either soft cloth or squeegee to prevent soap buildup. Never use abrasive cleaners and cleaning products that contain scouring agents as this may scratch the surface. Never use bristle brushes or abrasive sponges.

To ensure a long lasting hardware finish, wipe off the metal parts after each use with a soft cloth. Do not use abrasive cleaners or cleaning products containing ammonia, bleach or acid. If accidentally used, rinse the surface as soon as possible to prevent finish peeling or corrosion. After cleaning the shiny finishes, rinse thoroughly and wipe dry with soft cloth. Clean stainless steel surfaces at least once a week. When applying stainless steel cleaner or polish, work with (not against/across) the grain. Never use an abrasive sponge or cloth, steel wool or wired brushes.