EASY WHEEL QUICK COUPE RIDE-ON

Read Operation Instructions
Carefully Before Use

EASY WHEEL QUICK COUPE RIDE-ON

- Used as stroller
- Used as riding car

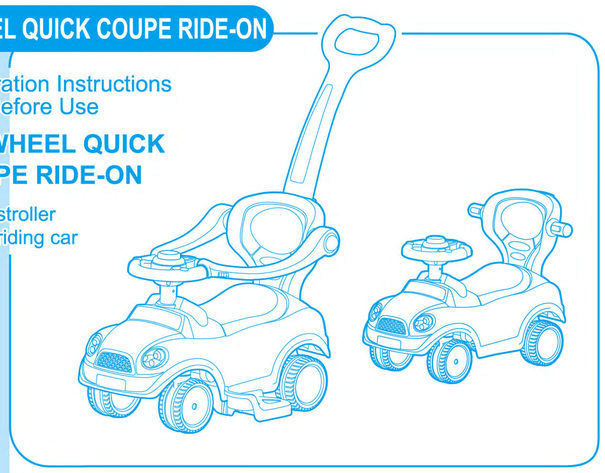

Please read the installation instructions carefully before installation.

Parts List

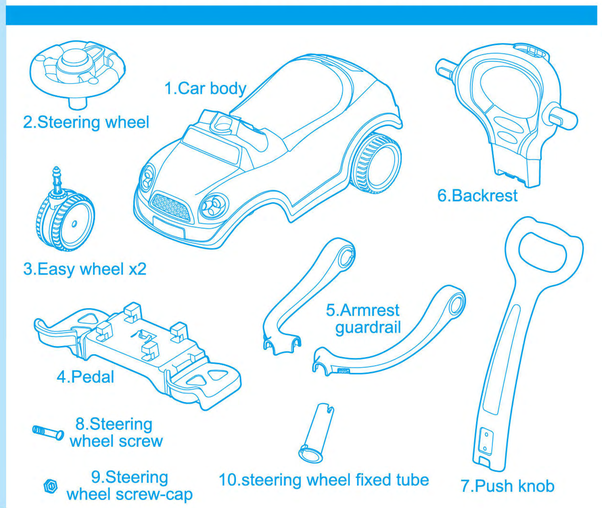

Beginning of assembly

1.Assembly of car body (please see the assembly order)

1. Insert the steering wheel fixed tube from the assigned location of car bottom into car front end according to the buckle hole direction.
2. Insert the steering wheel into the steering wheel fixed tube, and fix it with the screw and screw cap.
3. Insert the easy wheel into the assigned location of car bottom.
4. Insert the backrest into the assigned location of the car rear end.
5. Insert the armrest guardrail into the assigned location of both ends of the backrest, spin forward and buckle the steering wheel.
6. Insert the push knob into the assigned location of the backrest upper end.

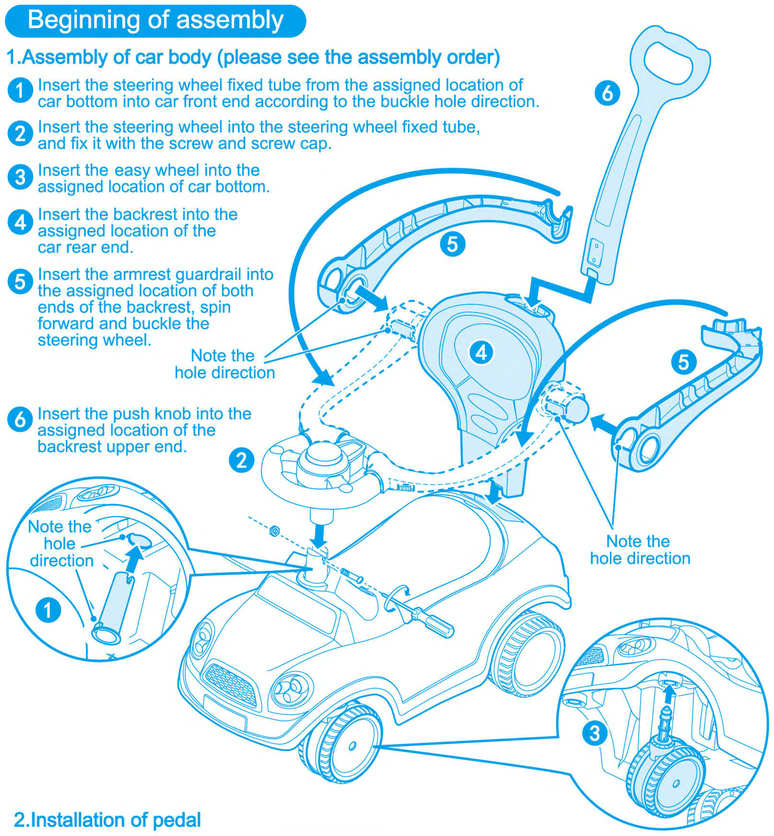

2.Installation of pedal

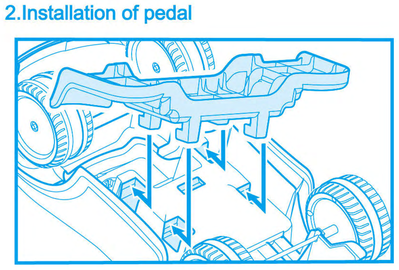

Insert the pedal buckles into the assigned location of the car bottom and push them forward along with the direction of arrow until fasten them.

Operating function

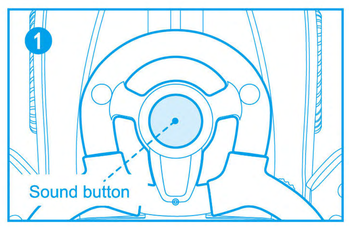

There is one sound button on the steering wheel, when press the button, the sound will be on.

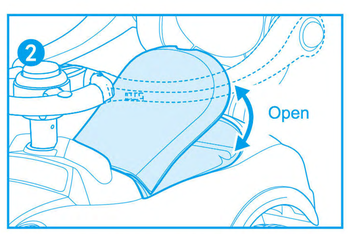

Open the seat and put the goods in it.

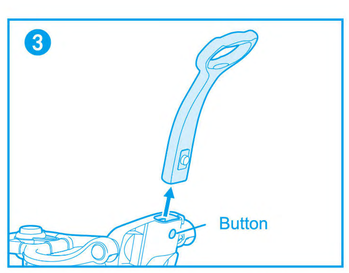

Press the button under the push knob, the push knob can be removed.

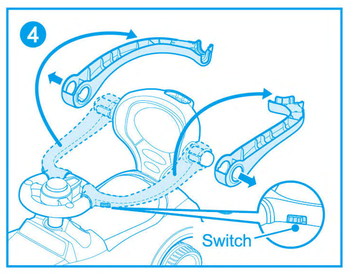

Push the switch of the armrest guardrail and spin it backward, the armrest guardrail can be removed.

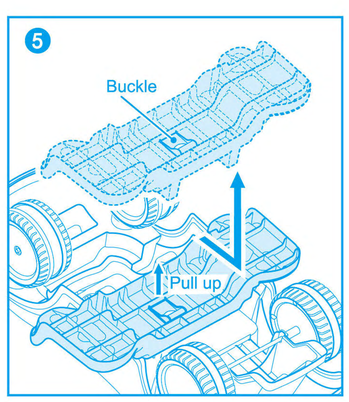

Pull up the pedal buckle, push them backward along with the direction of arrow and lift upward, the pedal can be removed.

Item transformation function

Stroller

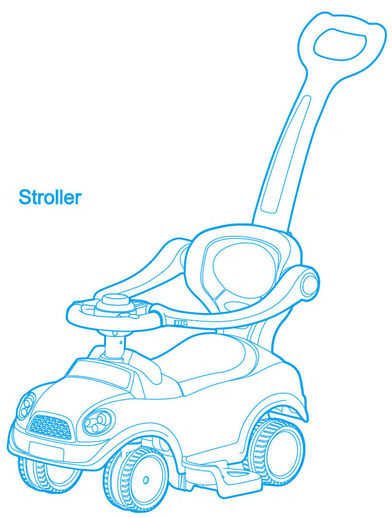

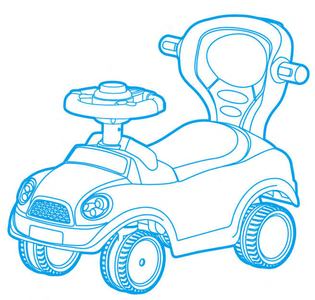

Riding car: After disassembling pedal (part 4), push knob (part 7) and armrest guardrail (part 5) according to the operating function Figure 3、4、5, a riding car which move with feet will be shown.

Safety operation guide

This operation guide shows you how to ensure children riding the motor with joy and safety. Please read below safety operation guide carefully before use.

1) Children should ride the motor properly with adult's guidance and instructions, otherwise children themselves or others may be hurt.
2) Some possible sharp edge, cuspidal points or small parts may be on the toy before assembly, so the toy should be assembled by adult.
3) Don't ride the car in such dangerous places as street, road, steep slope and beside swimming pool. Otherwise, it may cause traffic accident or drowning hazard.
4) The item is only suitable for children of 2-6 years old. Children must put on protective equipments before use, such as: helmet, hands pads and knee pads.
5) The car maximum load is 23 kg. No overload running.
6) To avoid suffocation, keep all bags away from babies and children. Dispose of all bags immediately.
7) Some parts of the car will be damaged if it is improperly ridden.
8) Small parts possibly fall off when this toy car is used, so it is not suitable for children under 2 years old.
9) Please frequently check whether the various parts are completely in good condition or not when installing and using, and they should be regularly checked and maintained.
10) Instructions are to be kept as they contain important information.

The package contains important information, please keep it.

Dimension of car

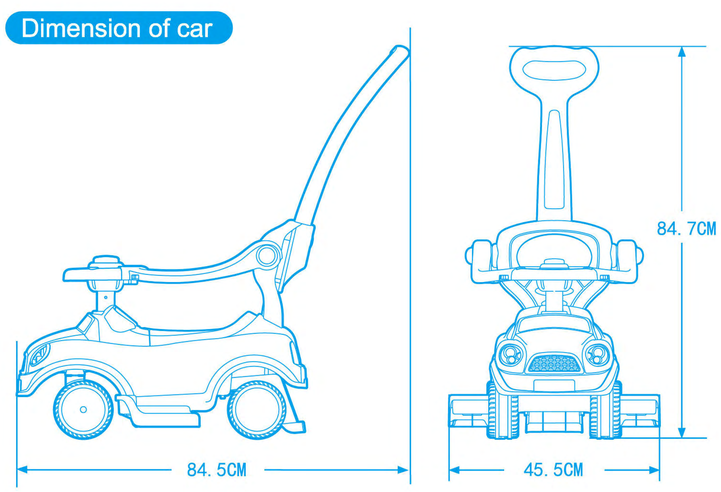

⚠ WARNING

To reduce the risk of injury , adult supervision is required .

Strictly forbidden using on the roadways, near motor vehicles,slope , swimming pools and where there is water ; Only used by 1 rider who wearing shoes .

⚠ WARNING

Wearing protective equipments when using and do not use in traffic.

⚠ WARNING

Keep away from kids before assembled by adult, as there are potentially sharp edges, points, or small parts.