Kids' Electric Vehicles

Product ID. 7AXFP

Scan for Support

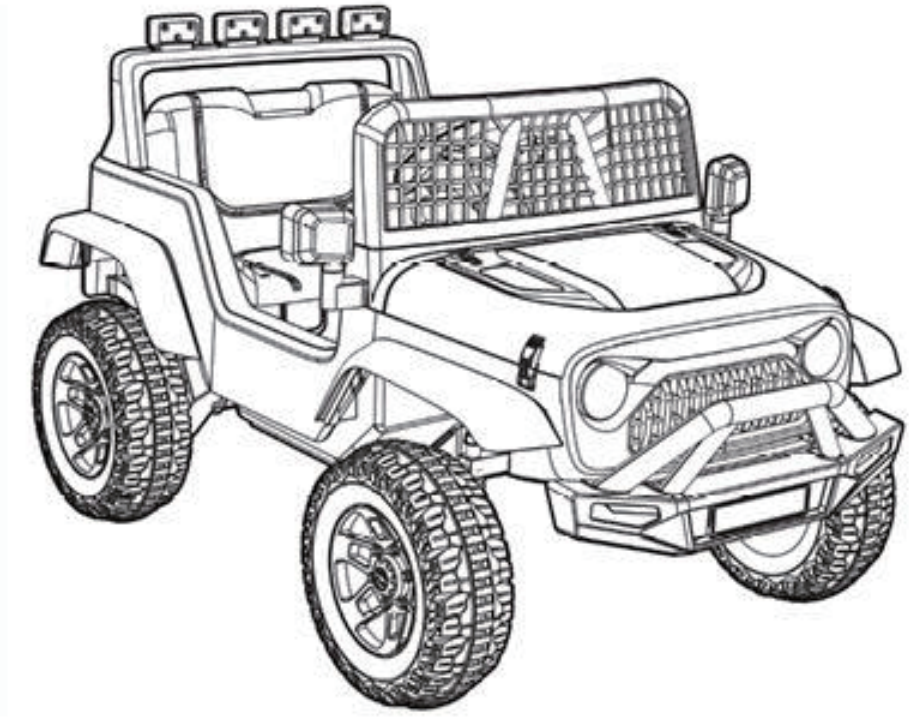

Distributed by

GARVEE.com

support@garvee.com

On the purchase of your new Ride-On.

This ride-on car will provide your child with many miles of riding of enjoyment. To help assure you and your rider a safe ride we ask you to please read this manual carefully, and keep it for future reference.

Follow the recommendations in this manual, they are designed to improve the safety and operation of your ride-on car and its rider.

	2WD
Battery	12V4.5AH
Charger	12V700-1000mA
input	Depend on local voltage
Motor	12V 390-18000x2
Steering Motor	390-5000*1

Suitable age: 3+ Years
Charge time: 8-12 hours
Load capacity: Under 30 kg
Size of car: 97 × 61.5 × 58 CM
Speed: 1.6-4.1 km/h

⚠ BATTERY INFORMATION

- Non-rechargeable batteries are not to be recharged.
- Rechargeable batteries are to be removed from the toy before being charged.
- Rechargeable batteries are only to be charged under adult supervision.
- Different types of batteries or new and used batteries are not to be mixed.
- Batteries are to be inserted with the correct polarity.
- Exhausted batteries are to be removed from the toy.
- The supply terminals are not to be short-circuited.

WARNING:



- **CHOKING HAZARD!** Not suitable for children under 36 months.
- Must be assembled by an adult.
- To reduce the risk of injury, adult supervision is required.
- Never use in roadways, near motor vehicles, on or near steep inclines or steps, swimming pools or other bodies of water; always wear shoes, and never allow more than 1 rider.
- Power supply or battery charger used with the electric toy shall be regularly examined for damage to the supply cord, plug, enclosure or other parts, and in the event of damage, it shall not be used not be used until the damage has been repaired.
- Use only battery(ies) and charger specified by the manufacturer.
- The battery on the vehicle is not replaceable.
- This toy should be used with caution since skill is required to avoid falls or collisions causing injury to the user or third parties.
- Protective equipment should be worn.
- Always wear shoes, always sit on the seat.
- Not to be used in traffic.
- This toy is unsuitable for children under 36 months due to its maximum speed; Maximum user weight is 30 kg.
- This toy has no brake.
- Aways wear protective equipment such as helmet, gloves, elbow and knee pads, also long sleeved shirts and long trousers help protece skin.

Rules for Safe Riding

- Keep Children within Safe Riding Areas.
- Use the toy only on flat surfaces. Such as inside your house, garden or playground.
- Never use in the dark. A child could encounter unexpected obstacles and have an accident. Operate the vehicle only in the daytime or a well-lit area.
- It is prohibited to change the circuit or add other electric parts
- Inspect wires and connections of the vehicle periodically.
- Do not let any child touch the wheels or be near them when the car is moving .
- All circuit connetions in the toy must be connected properly. Any wrong circuit connections could cause possible dangerous malfunctions, shortcircuit, sudden equipment failure and other possible failures

1 Rear gear box
x2

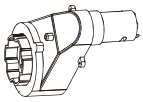

2 Vehicle body
x1

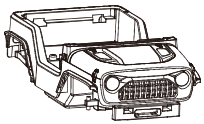

3 Driving wheel
x2

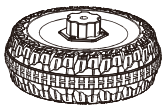

4 Normal wheel
x2

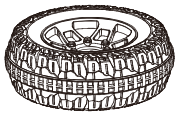

5 M10 washer
x6

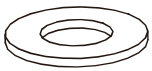

6 M8 lock nut
x6



7 Wheel cover
x4



8 Front axle
x1



9 Shock spring
x2

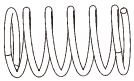

10 Rear axle carrier
x1



11 Rear axle
x1



12 #4x12 screw
x18

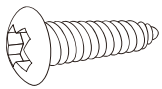

13 Front bumper
x1

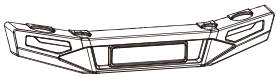

14 Front fender
x2
(L & R)



15 Rear fender
x2
(L & R)



16 Side mirror
x2
(L & R)

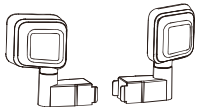

17 Steering wheel
x1

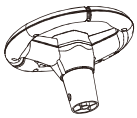

18 M5x30 machine screw
x1

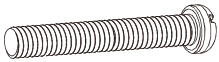

19 M5 lock nut
x1



20 Windshield
x1

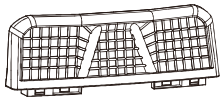

21 Seat
x1



22 Rear light rack
x1



23 Off-load light
x4

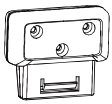

24 Bull bar
x1

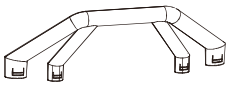

25 Remote control
x1

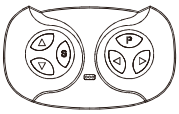

26 Socket wrench
x2

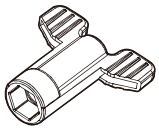

27 Spanner
x1

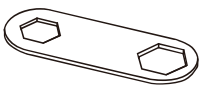

28 Charger
x1



Assembly tools required (not included):

Screwdriver



HINT: Some parts shown are assembled on both sides of vehicle

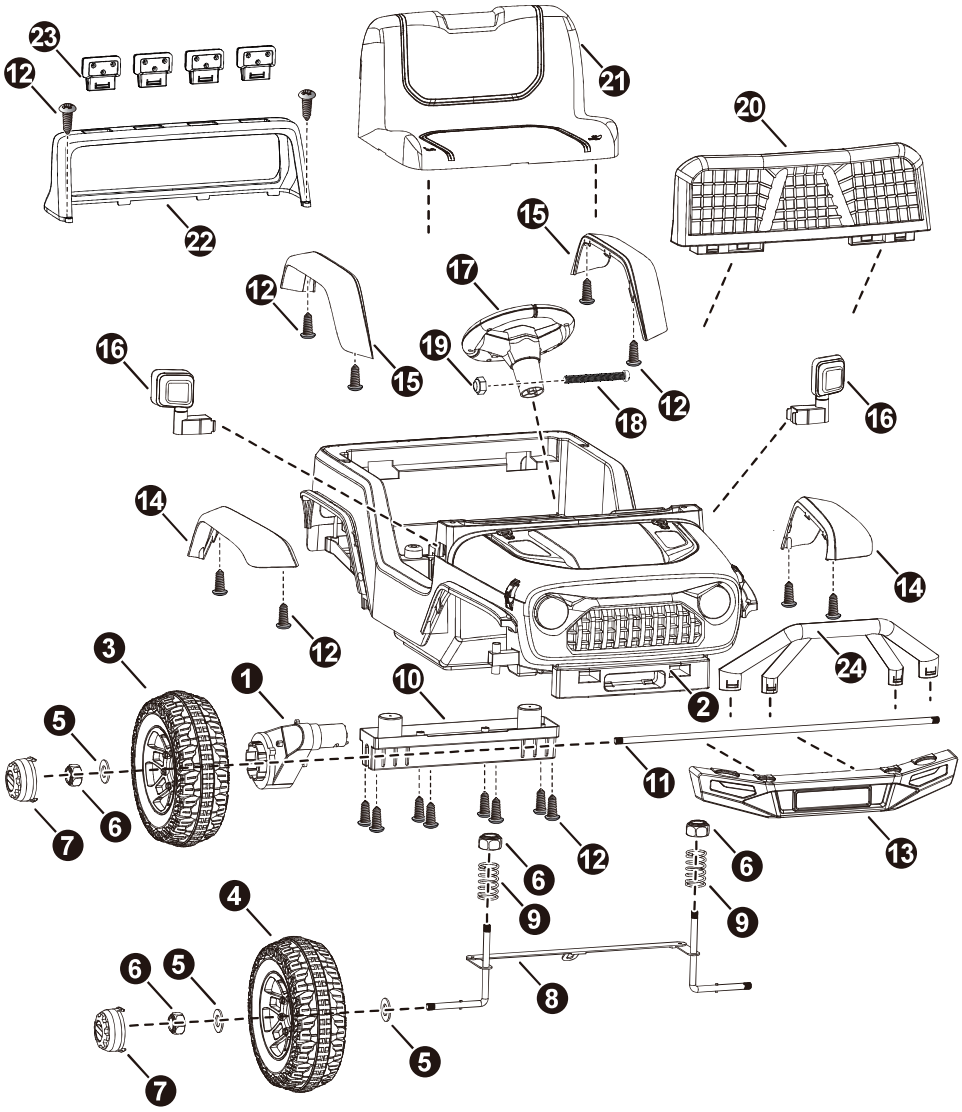

Attach the Front & Rear Fenders

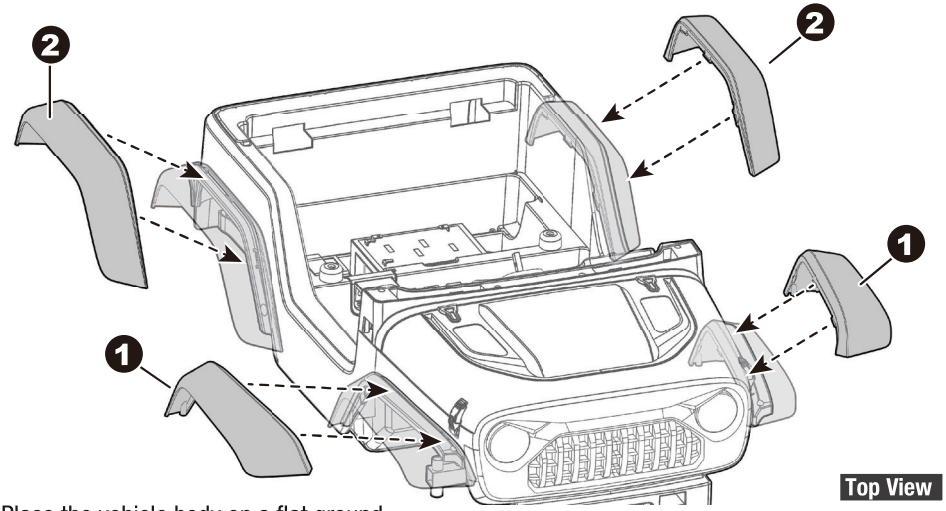

• Place the vehicle body on a flat ground.

1. Fit the two front fenders to the front end of the vehicle. Hint: There is a left and right front fender. If the fender does not seem to fit, try the other one.
2. Fit the two rear fenders to the rear end of the vehicle. Hint: There is a left and right rear fender. If the fender does not seem to fit, try the other one.
3. Insert two #4x12 screws through the wheel well and tighten on each fender.

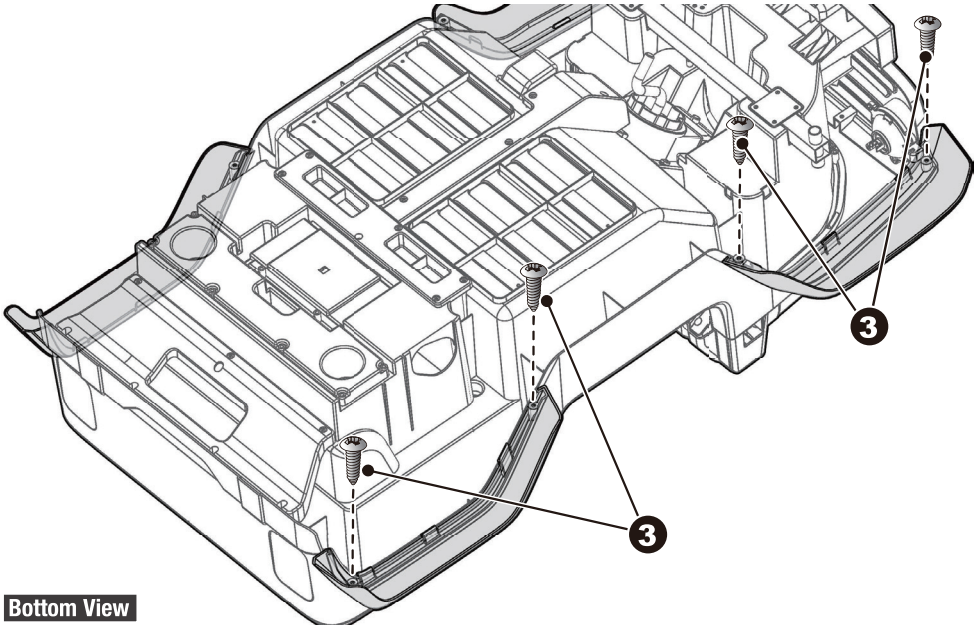

Attach the Front Axle

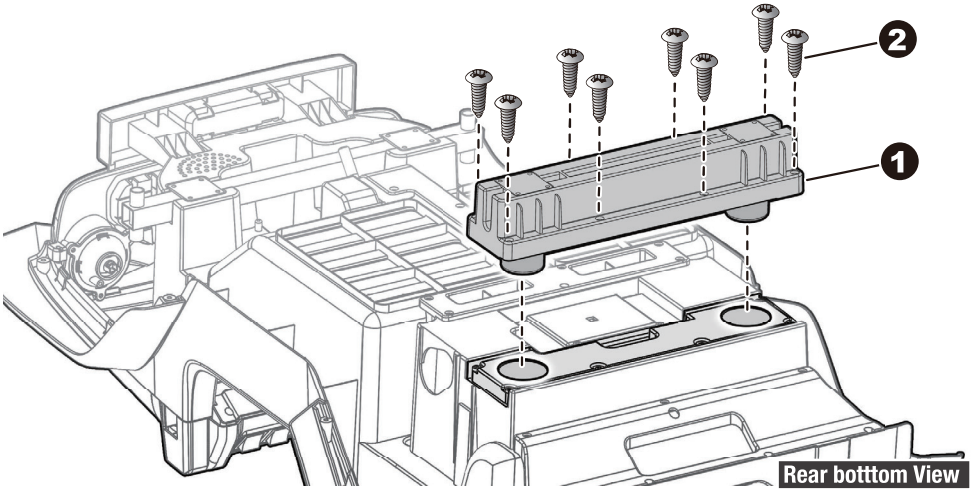

1. Fit the rear wheel carrier to the rear end of the vehicle.
2. Insert eigtht #4x12 screws and tighten with screwdriver.
3. Fit the two front axle springs to the front axle supports, and fit the front axle supports into the holes at both ends of the front axle holder.
4. Ensure the bent end of the steering column passes through the hole in the steering linkage.
5. Tighten a M8 lock nut to each end of the front axle support with a spanner (included).

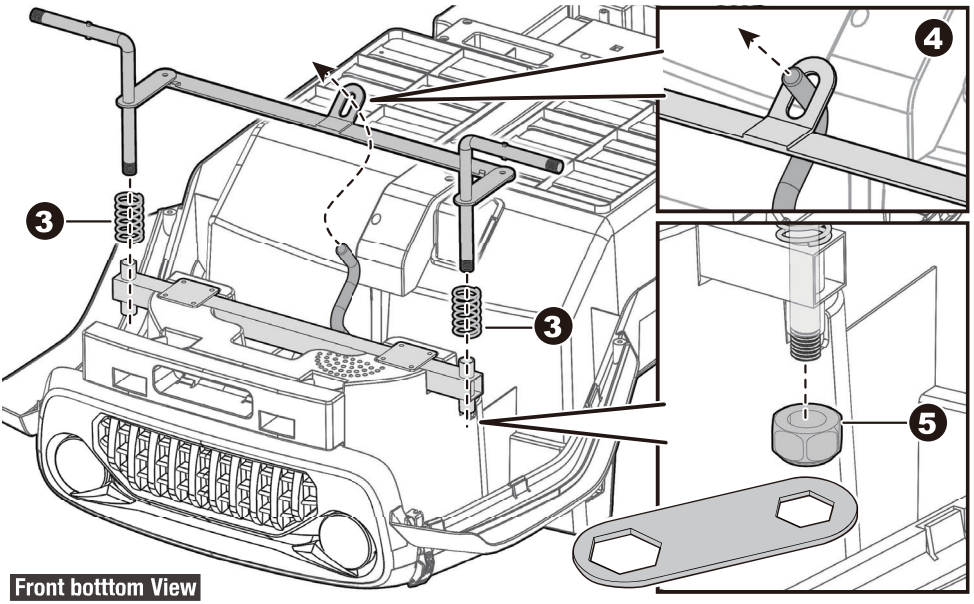

Attach the Front Wheels

Please choose the appropriate assembly steps based on the configuration of your product.

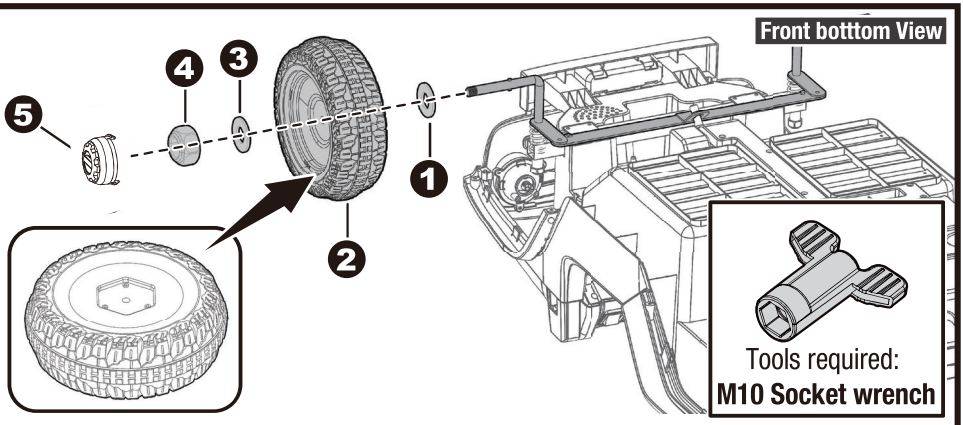

1. Slide a M10 washer onto the front axle.
2. Slide the **Normal wheel** onto the front axle.
3. Slide another M10 washer onto the front axle.
4. Tighten a M8 lock nut to the end of the front axle with a socket wrench.
5. “Snap” the hubcap to the front wheel.

Repeat for the other front wheel.

Attach the Rear Wheels

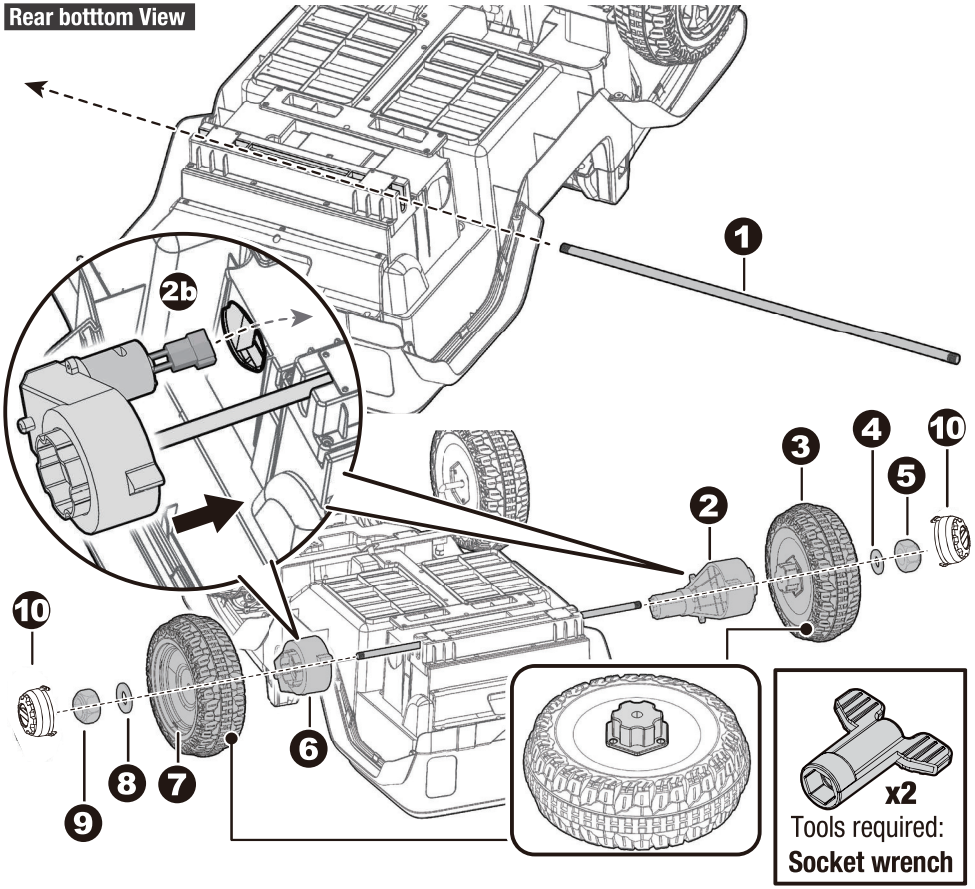

1. Insert the rear axle through the hole in the rear wheel carrier.
2. Slide a rear gear box on the rear axle. Make sure the motor and the wire connector on the gear box pass through the larger hole in the body (fig 2b).
3. Slide the **Driving wheel** onto the rear alxe. Ensure the wheel driver match up with the gear box.
4. Slide a M10 washer onto the rear axle.
5. Tighten a M8 lock nut to the end of the rear axle with a socket wrench.

6-9. Repeat the steps 2-5 to assemble the other rear wheel.

10. “Snap” the wheel covers to the wheels.

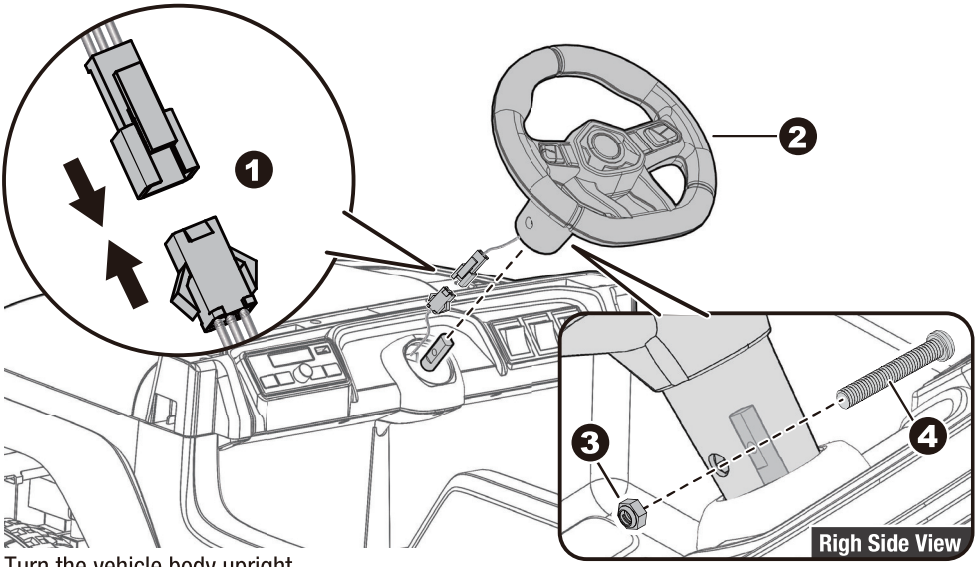

Turn the vehicle body upright.

1. Plug the sound unit connector on the steering wheel into the connector on the vehicle body, and hide the plugged connectors into the hole in the body.
2. Fit the steering wheel to the end of the steering column.
3. Insert the M5 lock nut into the slot at right side of the steering wheel.
4. Line up the holes on the steering wheel with the holes on the steering column, insert the M5x30 machine screw and tighten with a screwdriver.
5. Insert the tabs on the windshield into the grooves in the body, push until you hear it “click” into place.
6. Insert a side mirror into the hole on the each side of the vehicle body.

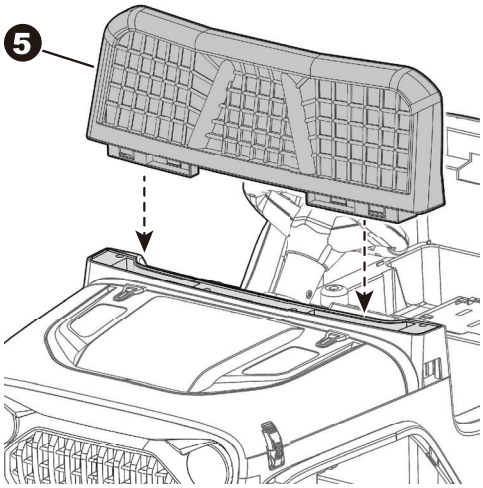

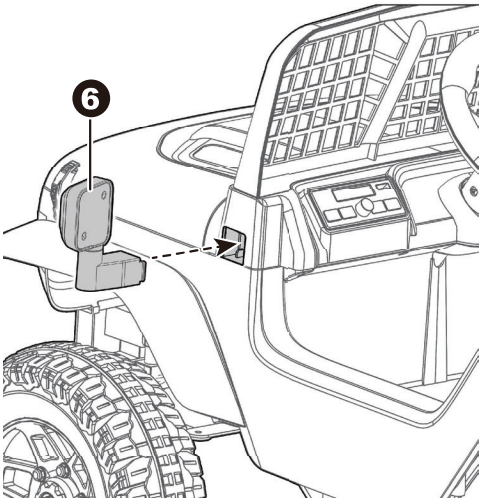

Plug the Power Supply & Attach the Seat

1. Plug the red connector on the vehicle body into the red connector on the battery.
2. Plug the white connectors on the body into the white connectors on the motors.
3. Using a slotted screwdriver (not included) or coin to turn the both seat locks to the unlock position. Fit the tabs on the seat back and the seat locks into the holes on the body. Turn the both seat locks to the lock position to secure the seat.

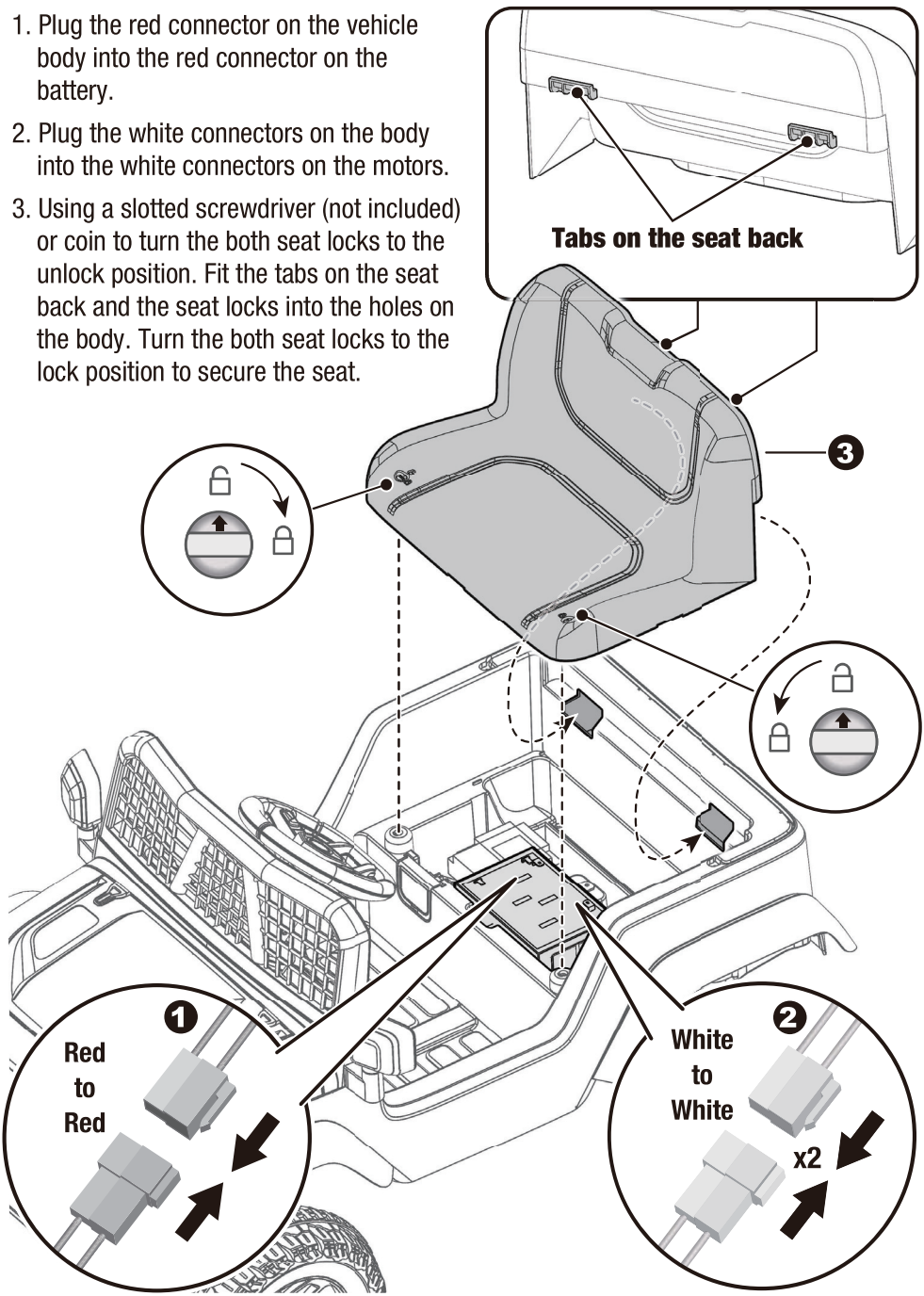

Plug the Rear Light Rack & Front Bumper

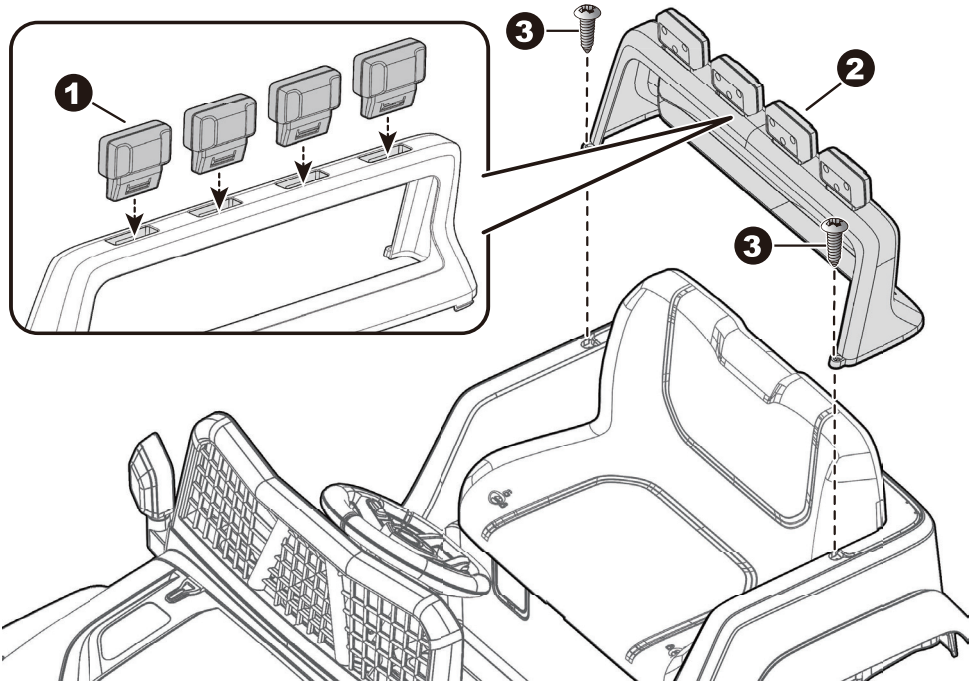

1. Fit the four off-load lights to the rear light rack.
2. Fit the rear light rack assembly to the rear end of the body,
3. Insert two #4x12 screws and tighten with a screwdriver.
4. Snap the bull bar (smooth side out) into the holes in the front bumper.
5. Fit the the front bumper to the front end of the body, push it until you hear it "click" into place.

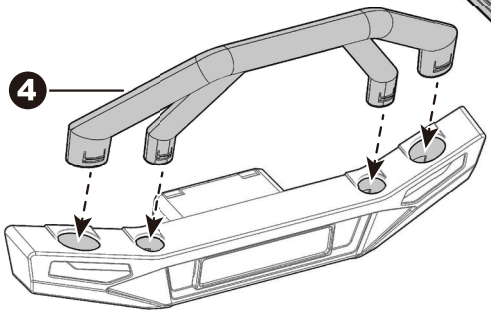

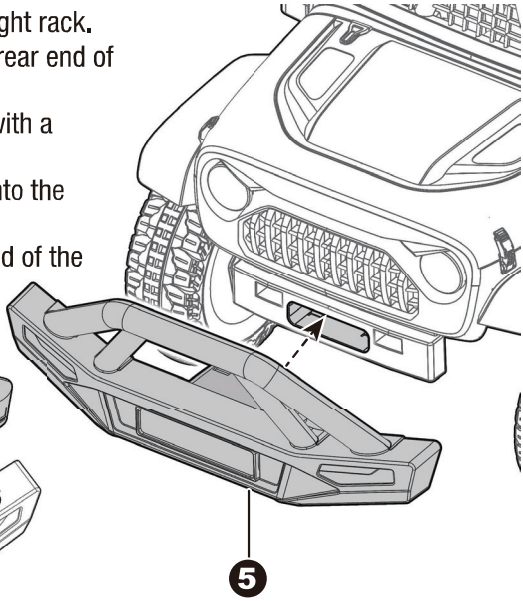

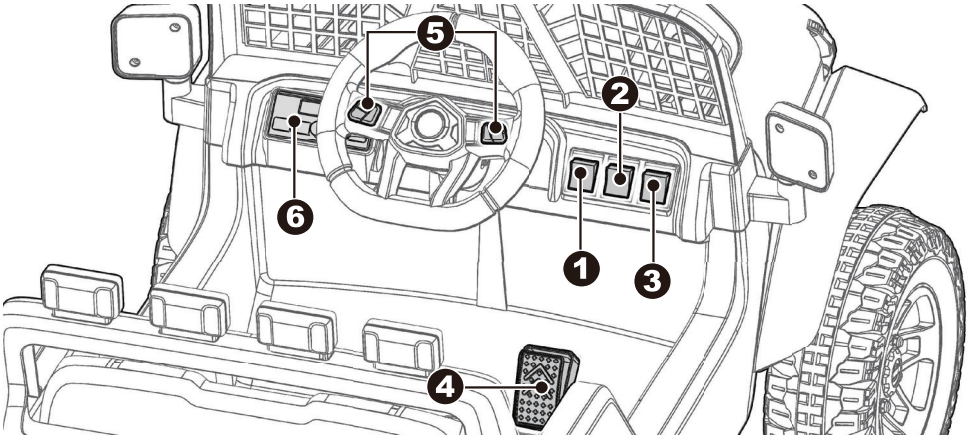

1. Power switch: Turn the product on and off.

2. High/Low speed switch:

Operate the product to move forward in high or low speed.

3. Forward/Reverse switch:

Change the direction that product moves from forward to reverse.

- To move the product forward, shift the lever to top position.
- To move the product backward, shift the lever to down position.
- Move the switch in the middle, the product will stop and not run.

4. Accelerator pedal:

- To move the product, press the pedal down.
- To brake or slow down, release pressure from the pedal.

5. Sound / Horn buttons: Press for sound / horn playing.

6. Audio Player:

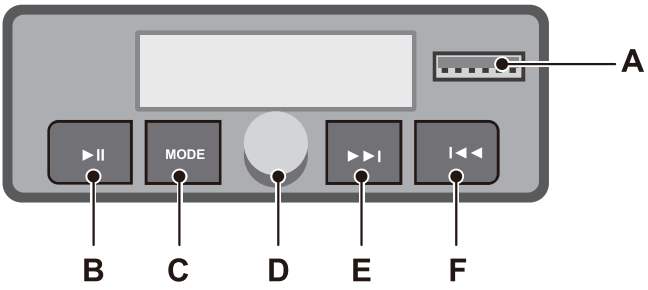

A. USB Interface: Connects your portable device to play audio through the product's speakers, also supporting MP3 format exclusively.

B. Play / Pause Button: Press and hold down this button for the FM radio to manually or automatically search for stations.

C. Audio source button: Allows you to change between different audio inputs such as FM radio (if equipped), USB port, Story mode, Music mode and Wireless connection (if equipped). In FM radio mode, holding down Button B (Play/Pause) enables you to manually or automatically search for radio stations.

D. Volume knob: Adjust the volume up or down.

E. Next Track / next channel

F. Previous Track / previous channel

WARNING: **ADULT OPERATING REQUIRED!**

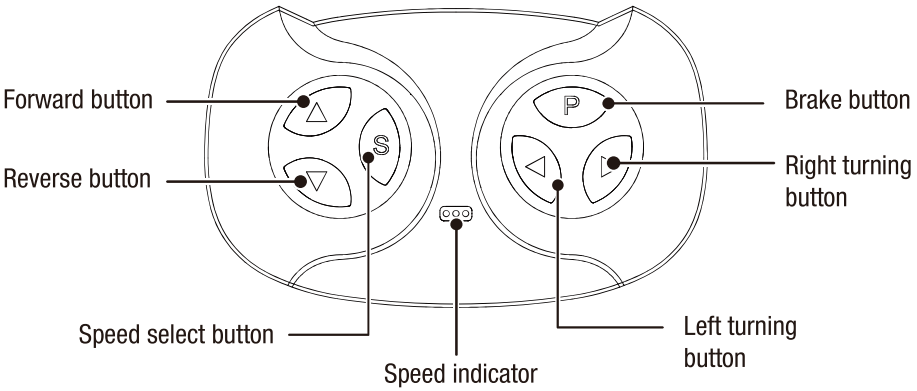

Attach the batteries of controller

Lift the battery compartment door on the back of the controller and insert two AAA(LR03) batteries.

HINT: Batteries not included. Refer to the Battery Information on the page 1.

1. Build connection

Long press the forward and reverse buttons for 3 seconds, and the speed indicator flashes. Then power on the vehicle, the speed indicator goes to long bright, means the connection successful. If the speed indicator no response, means the connection failed. Replace the batteries and retry.

2. Brake button

Press the button to stop the vehicle, press it again to release the brake.

3. Speed select button

The switch operates the vehicle to move in low, normal or high speed.

HINT: This switch won't work while your vehicle moves reverse.

NOTE:

- Leave the remote controller idling for about 10 seconds, it will shut down automatically.
- Rebuild connection when you replace the batteries of the remote controller.
- The remote control is not a toy. It is intended for adult use only and should not be made by children Use. Close supervision from an adult is always required. The receiving range may vary depending on the weather、 battery and other environmental conditions.

⚠ WARNING!

ONLY AN ADULT CAN CHARGE AND RECHARGE THE BATTERY!

⚠ WARNING!

This product with **Charging Protection:** when charging, all functions will be cut off! Only an adult can charge and recharge the battery!

- The POWER SWITCH must be turned in OFF position when charging.
- Before the first use, you should charge the battery for 4-6 hours. Do not recharge the battery for more than 10 hours to avoid overheating the charger.
- When the vehicle begins to run slowly, recharge the battery.
- After each use or once a month minimum recharge time as 8 to 12 hours, less than 20 hours at most.
- Use the only rechargeable battery and charger supplied with your vehicle. NEVER substitute the battery or the charger with another brand. Using another battery or charger may cause a fire or explosion.
- Do not use the battery or charger for any other product.

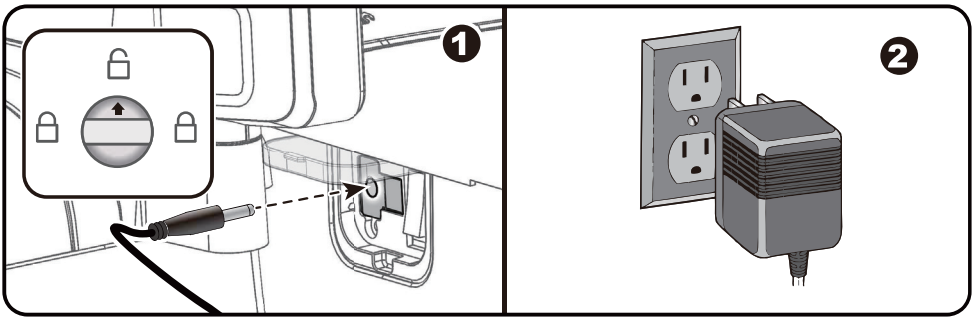

The input socket is located below the seat, turn the lock to unlock position to open the cover.

1. Plug the charger port into the input socket.
2. Plug the charger plug into a wall outlet. The battery will begin charging.

Problem	Possible Cause	Solution
Vehicle does not run	Battery low on power	Recharge battery.
	Thermal fuse has tripped	Reset fuse, see <Fuse>
	Battery connector or wires are loose	Check that the battery connectors are firmly plugged into each other. If wires are loose around the motor ***contact your distributor please.***
	Battery is dead	Replace battery, ***contact your distributor please.***
	Electrical system is damaged	***Contact your distributor please.***
	Motor is damaged	***Contact your distributor please.***
Vehicle does not run very long	Battery is under charged	Check that the battery connectors are firmly plugged into each other when recharging
	Battery is old	Replace battery, ***contact your distributor please.***
Vehicle runs sluggishly	Battery low on power	Recharge battery, ***contact your distributor please.***
	Battery is old	Replace battery, ***contact your distributor please.***
	Vehicle is overload	Reduce weight on vehicle.
	Vehicle is being used in harsh conditions	Avoid using vehicle in harsh conditions ,see <Safety>.
Vehicle needs a push to go forward	Poor contact of wires or Connectors	Check that the battery connectors are firmly plugged into each other. If wires are loose around the motor, ***contact your distributor please.***
	“Dead Spot” on motor	A dead spot means the electric power is not being delivered to the terminal connection and the vehicle needs repair. ***Contact your distributor please.***
Difficult shifting from forward to reverse or vice-versa	Attempting to shift while the vehicle is motion	Completely stop the vehicle and shift, see <Use Your New Vehicle>
Loud grinding or clicking noises coming from motor or gear box	Motor or gears are damaged	***Contact your distributor please.***
Battery will not recharge	Battery connector or adapter connector is loose	Check that the battery connectors are firmly plugged into each other.
	Charger not plugged in	Check that the battery charger is plugged into a working wall outlet.
	Charger is not working	***Contact your distributor please.***
Charger feels warm when recharging	This is normal and not a cause for concern	

Completely read through this manual and the troubleshooting guide table before calling. If you still need help resolving the problem ***Contact your distributor please.***

- It is parents' responsibility to check main parts of the toy before using, must regularly examine for potential hazard, such as the battery, charge,cable or cord, plug, screws are fastening enclosure of other parts and that in the event of such damage, the toy must not be used until that damage had been properly removed.
- Make sure the plastic parts of the vehicle are not cracked or broken.
- Occasionally use a lightweight oil to lubricate moving parts such as wheels.
- Park the vehicle indoors or cover it with a tarp to protect it from wet weather.
- Keep the vehicle away from sources of heat, such as stoves and heaters. Plastic parts may melt.
- Recharge the battery after each use. Only an adult can handle the battery. Recharge the battery at least once a month when the vehicle Raider is not being used.
- Do not wash the vehicle with a hose. Do not wash the vehicle with soap and water. Do not drive the vehicle in rainy or snowy weather. Water will damage the motor, electric system and battery.
- Clean the vehicle with a soft, dry cloth. To restore shine to plastic parts, use a non-wax furniture polish. Do not use car wax. Do not use abrasive cleaners.
- Do not drive the vehicle in loose dirt, sand or fine gravel which could damage the moving parts, motors or the electric system.
- When not using, all the electrical source should be turn off. Turn off the power switch and disconnect the battery connection.

⚠ WARNING

Battery posts,terminals,and related accessories can expose you to chemicals including lead and lead compounds, which are known to the State of California to cause cancer and birth defects or other reproductive harm, and are toxic and corrosive. Wash hands after handling. For more information go to www.P65Warnings.ca.gov.

Battery Fuse

The battery features a thermal fuse with a rest fuse that will automatically trip and cut all power to the vehicle if the motor, electric system or battery is overloaded. The fuse will reset and power will be restored after the unit is turned OFF for 20 seconds and then turned ON again. If the thermal fuse trips repeatedly during normal use, the vehicle may need repair. Contact your distributor please.

To avoid losing power, follow these guidelines:

- Do not overload the vehicle.
- Do not tow anything behind the vehicle.
- Do not drive up steep slopes.
- Do not drive into fixed objects, which may cause the wheels to spin, causing the motor to overheat.
- Do not drive in very hot weather, components may overheat.
- Do not allow water or other liquids to come in contact with the battery or other electric components.
- Do not tamper with the electric system. Doing so may create a short, causing the fuse to trip.

Our products are suitable for ASTM F963; GB6675; EN71 and EN62115 standard.

Disposal Of Battery





- Your sealed lead-acid battery must be recycled or disposed of in an environmentally sound manner.
- Do not dispose of your lead-acid battery in a fire. The battery may explode or leak.
- Do not dispose of a lead-acid battery in your regular, household trash. The incineration, land filling or mixing of sealed lead-acid batteries with household trash is prohibited by law.

Manufacturer: PINGHU LITTLE STAR TOYS CO.,LTD

Manufacture Address: NO.1888 CANGDONG ROAD,
XINCANG TOWN, PINGHU CITY, ZHEJIANG, CHINA

US Importer: JUSTALENT INTERNATIONAL INC.

IMPORTER ADDRESS: 4215 E Airport Dr Ontario, CA 91761

E-MALL: support@garvee.com



MADE IN CHINA