Assembly Instruction

ITEM # SW24L1722 / Ornate Floral Carved 1 Door End/Side

Version: Sep 01,2025

PARTS	A	B	C	D	E	F				
QTY	1	1	2	1	1	1				

PARTS	H1	H2	H3	H4	H5	H6				
QTY	8	8	4	1	1	1				

STEP 1

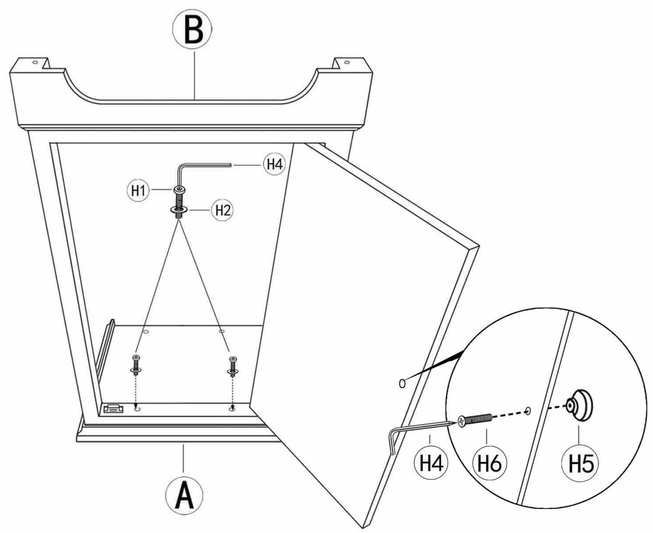

STEP 2

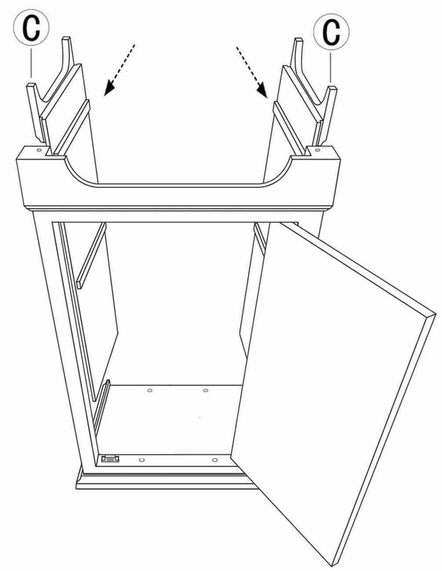

STEP 3

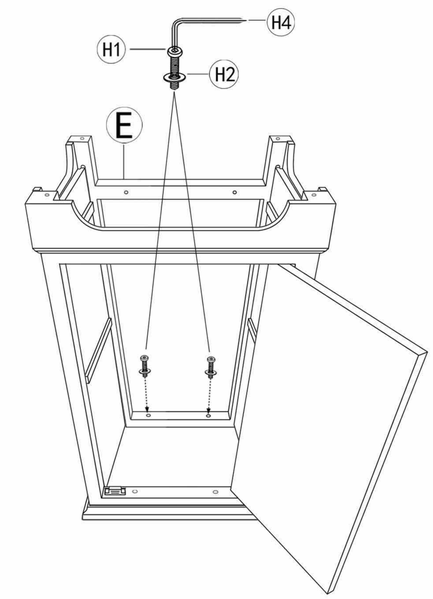

STEP 4

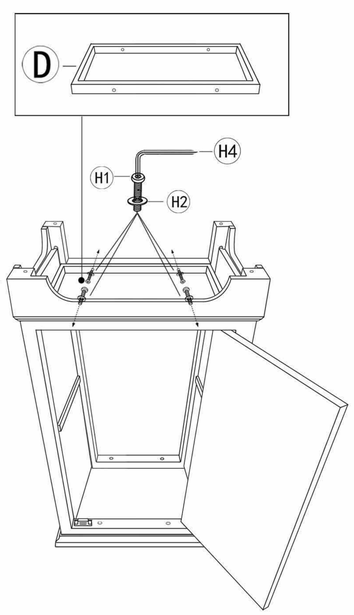

STEP 5

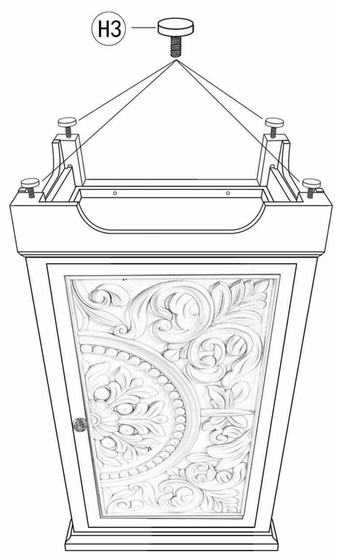
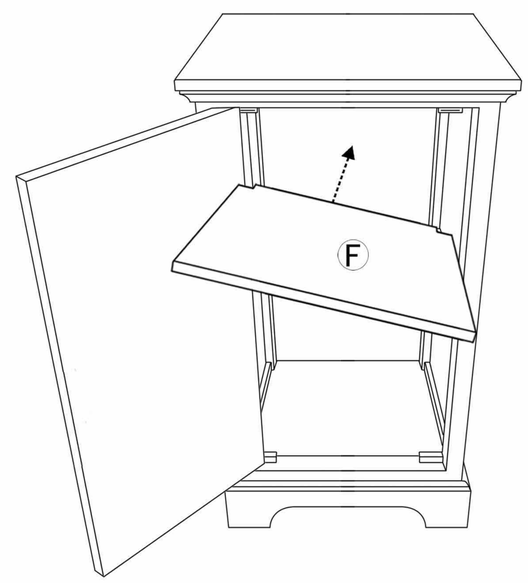
STEP 6