LED Wall Mount One Side Magnifying Make Up Mirror
Installation Instructions
Circular KMM102

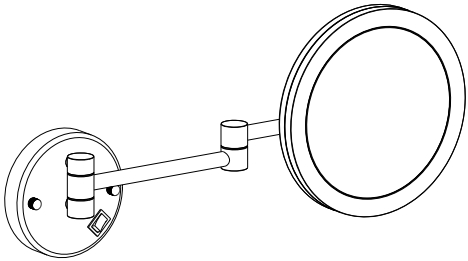

Tools you may need

Drill

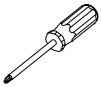

Phillips Screwdriver

Level

Safety Glasses

PARTS Included In the Package

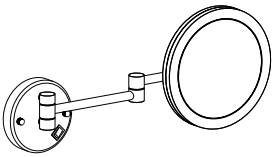

Magnification Mirror

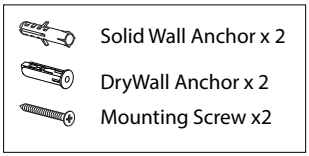

Hardware Bag

Before Installation

DANGER - RISK OF SHOCK
DISCONNECT POWER BEFORE INSTALLATION

Failure to read these instructions prior to installation may result in personal injury, property damage, or product failure. Manufacturer assumes no responsibility for product failure due to improper installation.

GROUNDING INSTRUCTIONS

This product must be connected to a grounded metal, permanent wiring system, or an equipment grounding conductor must be run with
the circuit conductors and connected to the equipment grounding terminal or lead on the product.

IMPORTANT SAFETY INSTRUCTIONS

Unpack the magnification mirror. Check the box thoroughly for all hardware and loose parts. Carefully inspect the magnification mirror for damage.
Observe all local electrical codes and building codes. Wire the mirror in accordance with the electrical codes.
This magnification mirror is for indoor use only.
When using an electrical furnishing, basic precautions should always be followed, including the following:
Read all instructions before using the wall mounted magnification mirror.

DANGER – To reduce the risk of electric shock:

1. Always unplug this furnishing from the electrical outlet before cleaning or servicing.

WARNING – To reduce the risk of burns, fire, electric shock, or injury to persons:

1. Unplug from outlet before putting on or taking off parts.
2. Close supervision is necessary when this furnishing is used by, or near children.
3. Use this furnishing only for its intended use as described in these instructions. Do not use attachments not recommended by the manufacturer.
4. Do not operate this furnishing if it has a damaged cord or plug, if it is not working properly, if it has been dropped or damaged, or dropped into water. Contact a local service center for examination and repair, or contact your dealer or Kibi directly.
5. Keep the cord away from heated surfaces.
6. Never operate the furnishing with the air openings blocked. Keep the air openings free of lint, hair, and the like.
7. Never drop or insert any object into any opening.
8. Do not use outdoors.
9. Do not operate where aerosol (spray) products are being used or where oxygen is being administered.
10. To disconnect, turn all controls to the off position, then remove plug from outlet.

WARNING: Risk of Electric Shock – Connect this furnishing to a properly grounded outlet only. See Grounding Instructions.

11. Mount furnishings at the correct height.
12. The hardwired magnification mirror must be mounted to a standard octagon or 4" round type electrical box. The electrical box should be pre-installed in the wall in accordance with local building and electrical codes.

Cleaning and Care

NOTE: Under no circumstances should an ammonia-based cleaner be used on magnification mirror. When cleaning the mirror surface use only a lint-free polishing cloth for cleaning. To remove stubborn stains slightly dampen the cloth with water or rubbing alcohol. When cleaning the metal frame, use only a damp cloth.
NOTE: Do not use abrasive cleansers on any part of the magnification mirror.

DO NOT RETURN TO STORE

If you have any trouble, contact us before reaching out to the retailer. we'll make it right. Our customer service team will be glad to assist you with any assembly, missing part or questions that you may have about your products.

Contact KIBI 855-883-0888 support@kibiusa.com www.kibiusa.com

Installation

1

CAUTION DISCONNECT POWER BEFORE INSTALLATION

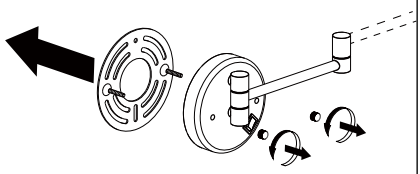

Remove the mounting plate by unscrewing the decorative nuts on the the magnification mirror base. Set this hardware aside in a safe place.

2

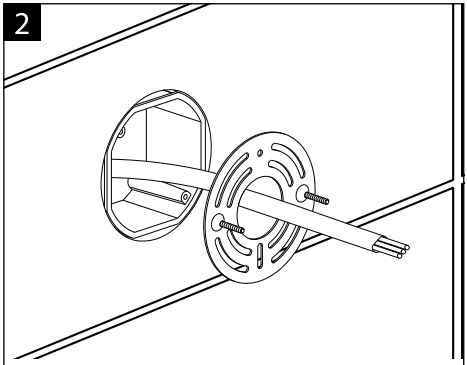

Once the mounting plate is free, pass the field wiring through the center opening of the mounting plate.

3

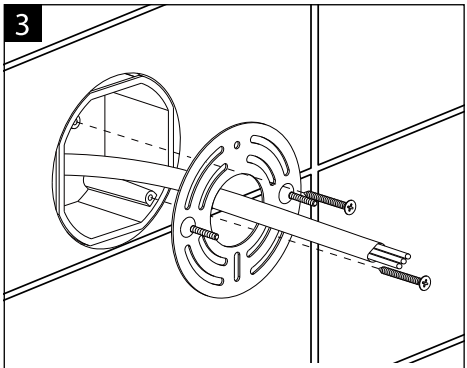

Align the supplied mounting screws with the electrical box screw locations and loosely install screws.

4

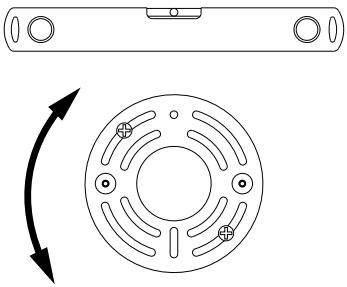

Using a level, adjust the rotation of the mounting plate until it's level.

5

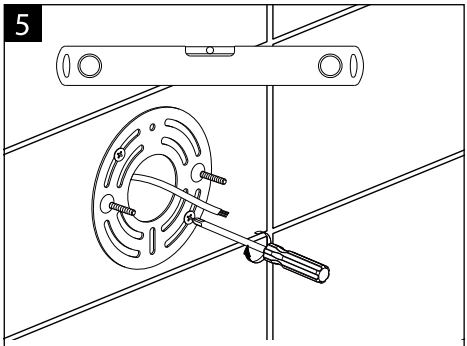

While holding the mounting plate level, tighten the screws (must be flat head), securing the mounting plate to the electrical box.

6

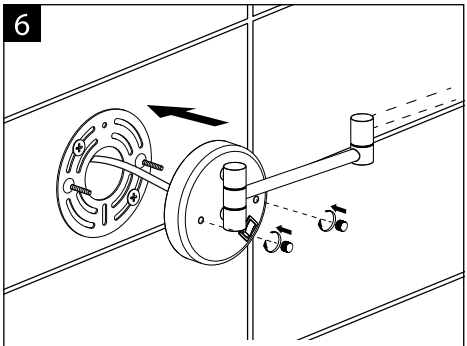

Using the wire nuts provided, make all electrical connections using the electrical diagram as reference. Push excess wire into the electrical box and reinstall the decorative nuts removed in Step 1

Critical dimensions show in mm

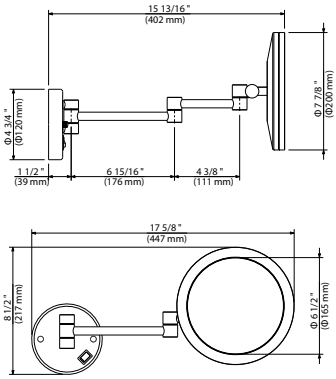

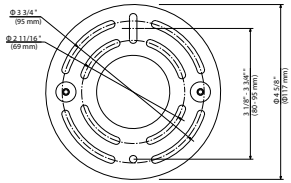

Electrical Connections

⚠ WARNING: Shut off power before wiring

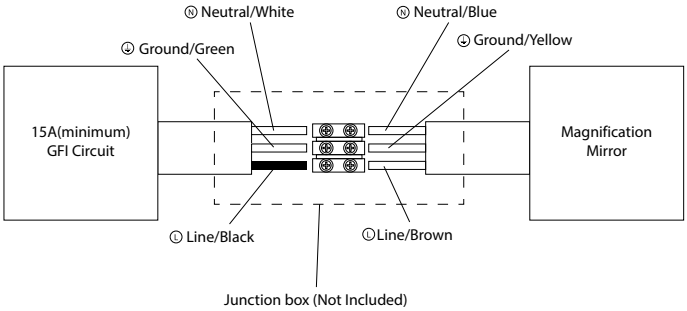

WARRANTY

KIBI warrants to the original purchaser that, it will, at its election repair, replace, or make appropriate adjustment to products made by this company shown to have significant defects in material or workmanship which are reported to KIBI in writing within one (1) year from the date of delivery. KIBI is not responsible for installation costs.

The warranty is void in the event the product is damaged in transit, or if damage or failure is caused by abuse, misuse, abnormal usage, faulty installation, damage in an accident, improper maintenance, or any repairs other than those authorized by KIBI.

At the expiration of the one year warranty period, KIBI shall be under no further obligation under any warranty, expressed or implied, including the implied warranty of merchantability. KIBI shall not be liable for any consequential damages arising out of or in connection with the use or performance of its products. Some states do not allow limitations on how long an implied warranty lasts or do not allow the exclusion or limitation of incidental or consequential damages, so the above limitation or exclusion may not apply to you.

Any liability against KIBI under any implied warranty, including the warranty of merchantability, is expressly limited to the terms of this warranty. Permission to return any merchandise under this warranty must be authorized by KIBI and returned prepaid by the purchaser. Claims under this warranty should be sent directly to your dealer.