Horizontal Privacy Panel

Assembly Instructions

3 YEARS LIMITED WARRANTY

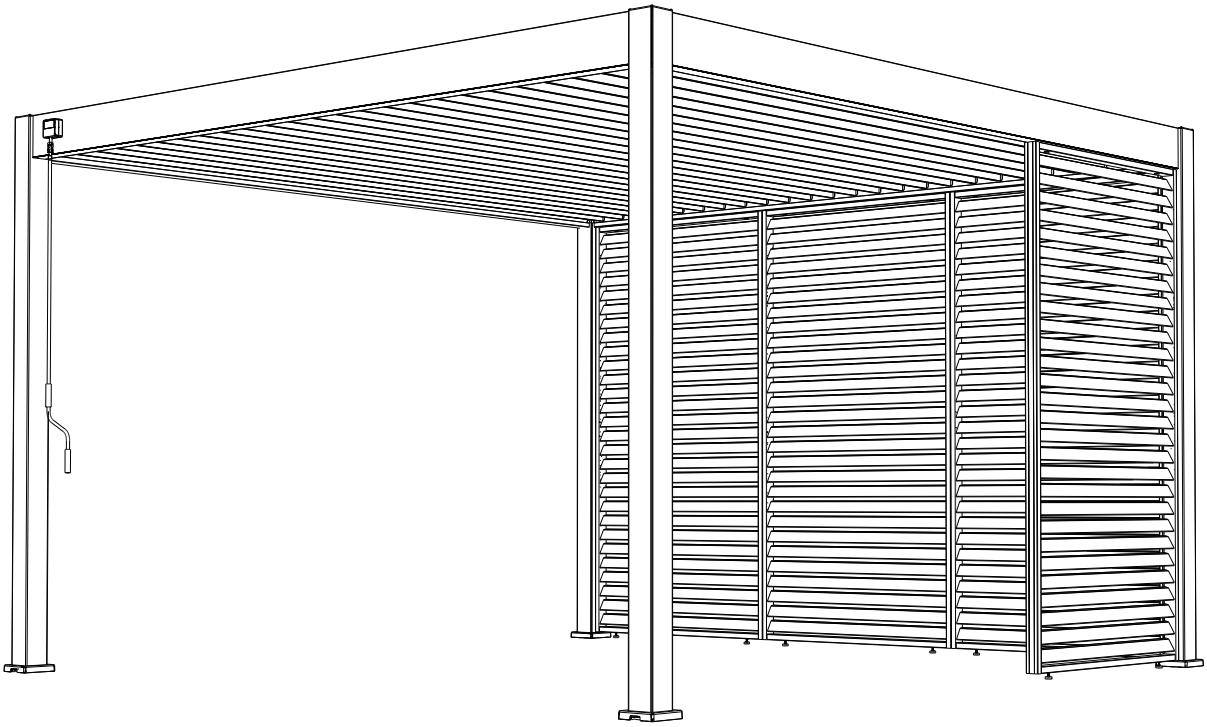

PARAGON OUTDOOR

@paragonoutdoorcompany

Paragon Group USA

Customer Service Contact Information: 1-877-782-4482

support@paragon-outdoor.com

Horizontal Privacy Panel

Please read the following instructions completely before you begin assembly. Any errors made during installation are not covered by the product's warranty. If you have any questions during the installation process, please call us .

NECESSARY TOOLS AND SAFETY GEAR(NOT SUPPLIED)

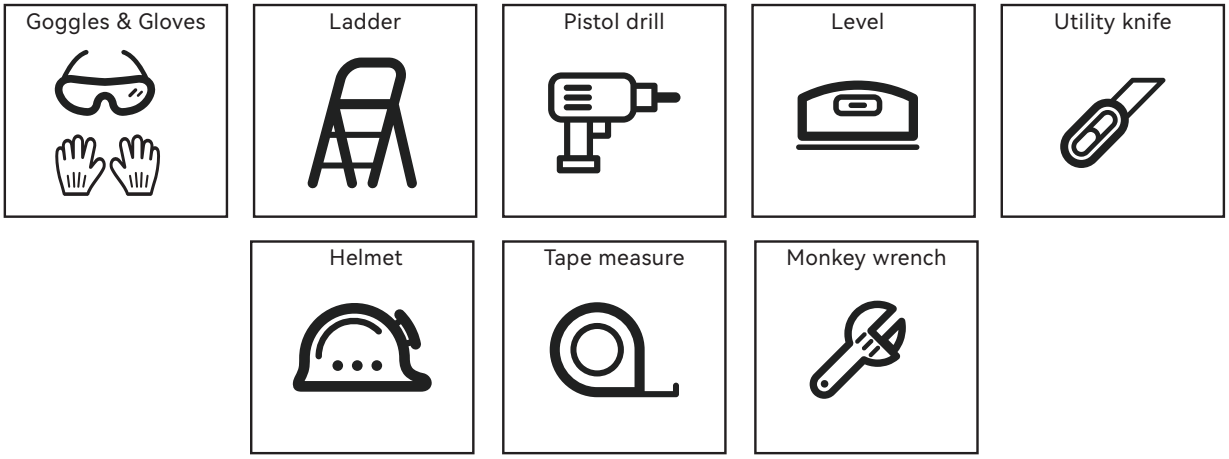

2D&3D FOOTING MEASUREMENT

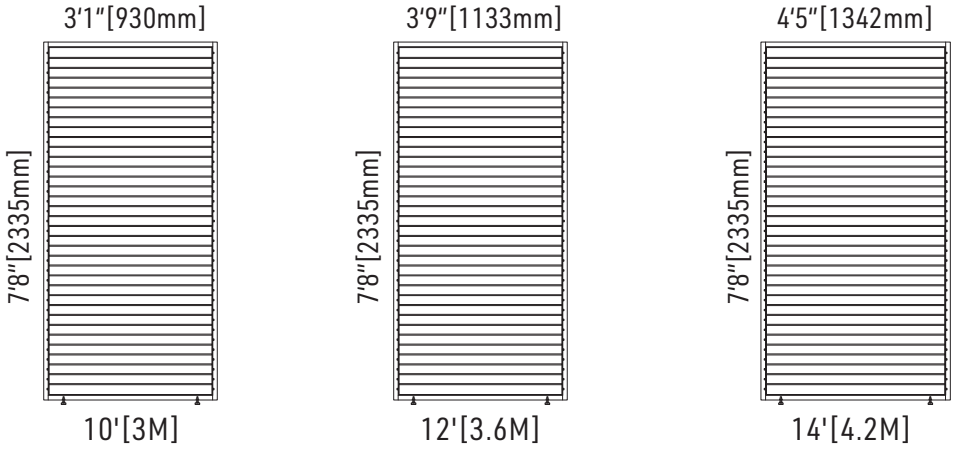

Paragon Outdoor's 3 Year Limited Warranty

Limited Warranty

Paragon Outdoor warrants to the original purchaser that all components and hardware in its products, under normal use and service conditions, will be free from defects in manufacturing and materials for a period of 3 years* from the date of original retail purchase subject to the definitions, terms and conditions contained in this warranty.

Paragon Outdoor will replace any defective part within the warranty period, at its discretion, if it is found to be defective of workmanship or materials. Paragon Outdoor may request photographs, videos, or physical return of the defective part for verification purposes.

Warranty Conditions

1. This warranty shall be valid only if the product is installed, cleaned, handled and maintained in accordance with Paragon Outdoor's written recommendations listed below.
2. Without derogating from the above, damage caused by use of force, incorrect handling, inappropriate use, neglectful use or assembly or maintenance, accidents, impact from foreign objects, vandalism, pollutants, alteration, painting, connecting, gluing, sealing not in accordance with the user's manual, or damage resulting from cleaning with incompatible detergents and minor deviations of the product are not covered by this warranty.
3. This warranty does not apply to damage resulting from "force majeure", which includes but is not limited to, hail, storm, tornado, hurricane, blizzard, flood, or fire effects, beyond stated claims.
4. This warranty is void if structural parts and components used are not compatible with Paragon Outdoor's written recommendations.
5. This warranty applies to the original owner and registrant and is non-transferable.

Operation: Privacy Panels

1.These are four-season products, meaning that they may be left up year-round.
2. Check all hardware for tightness before and during usage of the unit. Tighten screws at least twice a year.

Defective & Replacement Parts

1. In case of a defective part or if a problem occurs while using this product, please contact Paragon Outdoor Customer Service at (877) 782-4482.
2. To order replacement parts, identity the model number and the part number found in your assembly manual and contact Paragon Outdoor customer service.

Planning Assembly

1. It is the consumer's responsibility to comply with building rules, regulations, zoning restrictions or any other regional restrictions and obtain the required permits before purchasing the product and installing it.
2. Make sure that every part is in the box before beginning installation.
3. Some parts may have sharp edges; it is recommended to wear gloves, protective eyewear and closed shoes.
4. You must schedule enough time to complete assembly as you cannot leave the product unattended if it is not fully assembled, even if bolted to the ground.
5. A minimum of 3 people are required for a safe assembly of the product. This will vary depending on certain steps of installation.
6. Follow each instruction manual carefully to ensure the strength of the product.
7. To avoid damage to the product and its part, use the proper tools. Do not use the product as a support. The use of a ladder may be necessary at certain stages of assembly.
8. Keep the instruction manual and the parts list in case of future needs or references.
9. Do not assemble the product on days of wind or rain.

Safety Information

IT IS VERY IMPORTANT TO READ AND FOLLOW ALL SAFETY PRECAUSTIONS BEFORE ASSEMBLY AND DURING USE OF THE PRODUCT.

1. Keep children and pets away from assembly area.
2. When assembling and using the product, basic safety precautions must always be followed to reduce risks of personal injuries and damages to the product and its surroundings.
3. Ensure that all parts are in the boxes before starting the assembly. Is it recommended to wear protective gloves since some of the parts have sharp edges.
4. Begin the assembly and install the product more than 10 ft. away from any obstructions including, but not limited to, a fence, overhanging branches, a laundry line or electrical wire and as much as possible in a place protected from the wind.
5. Always install the product on a level platform and be anchored according to the surface recommendations in the assembly instructions.
6. Check all hardware for tightness before and during the use of the product. Tighten screws at least twice a year.
7. Do not install the product in a space where there is a possibility of high winds.

Care and Cleaning

Use a mild soap and wash with warm water using a sponge or fabric cloth. Rinse with clean water.

Customer Service Contact

If you are experiencing any issues with the assembly of your new structure, please do not return – our expert customer service team will help you with all questions for a smooth assembly process.

Email: support@paragon-outdoor.com
Call: +1 (877) 782-4482

Hours of Operation

Speak with an Expert Customer Service Agent: Monday – Friday: 8:00 am – 5:00 pm CST
We are available 24 hours a day, 7 days a week. Please allow up to 24 hours for a response.

CARTON

REF	ICON	QTY
M1		1
M2		1
N1		1
N2		1
H1		2
E1		1
E2		27

REF	ICON	QTY
W1	3.9×25mm	14
W2		2
W3		2

REF	ICON	QTY
W4	5×19 8mm	2
W5	PH2	1
W6	8mm	1
K1		2

REF	ICON	QTY
K3		1

REF	ICON	QTY
K3-1	8×60	2

1

Please first detach the edging strips(H1) from the two side frames(M1 & M2) of the privacy panel.

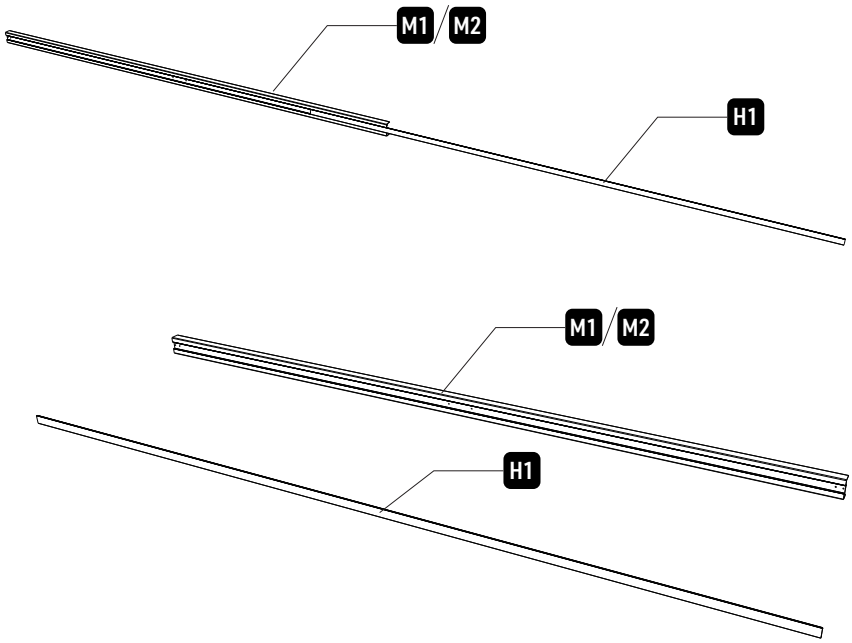

2

- Pick out the longest louver(E1) from all louvers.
- Find the hole on the side frame of the privacy panel, then insert the E1 into the corresponding location shown in the diagram as below.

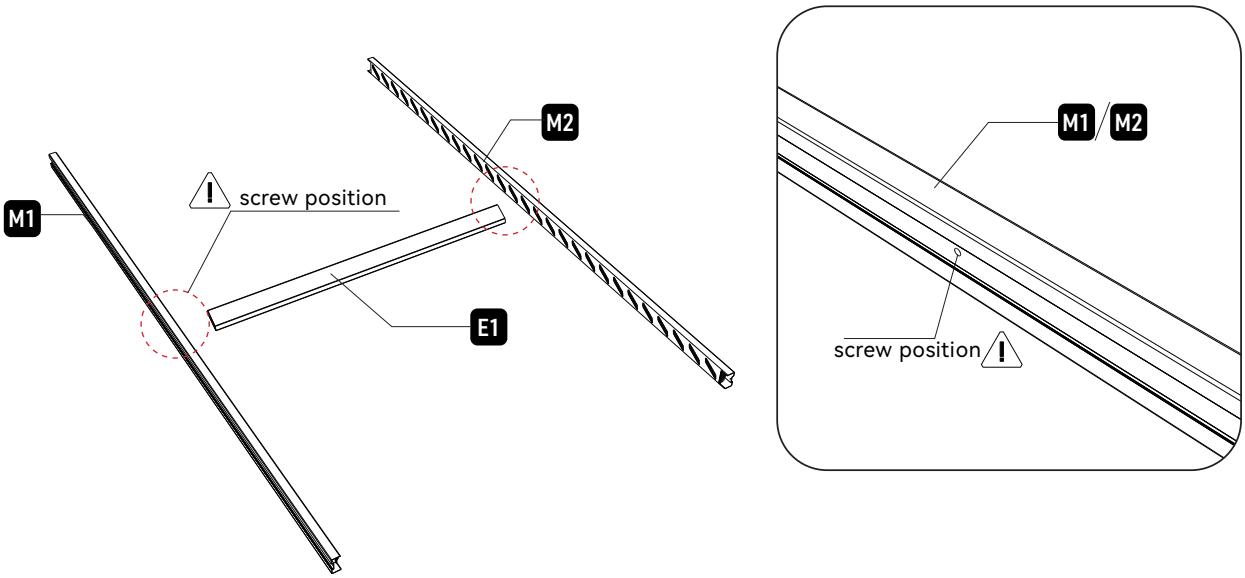

3

After inserting the E1, please use the screw(W1) to attach the two ends of E1 onto the frame.

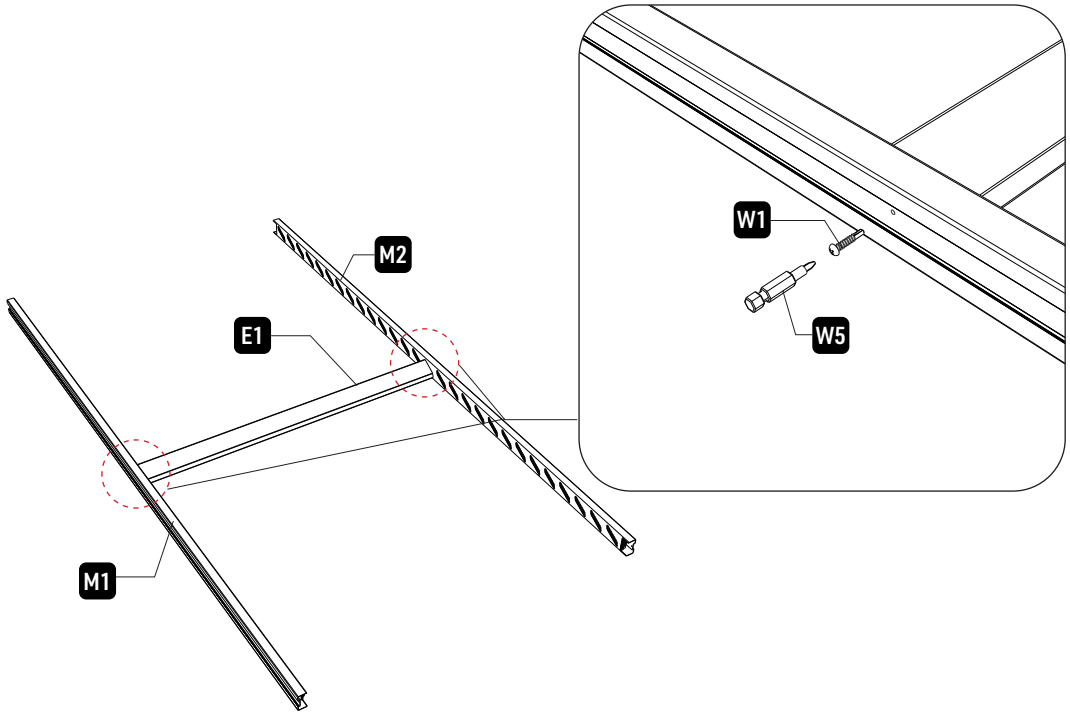

4

Install the upper and lower frame according to the diagram below, and attach the frame by using two screws on each side.

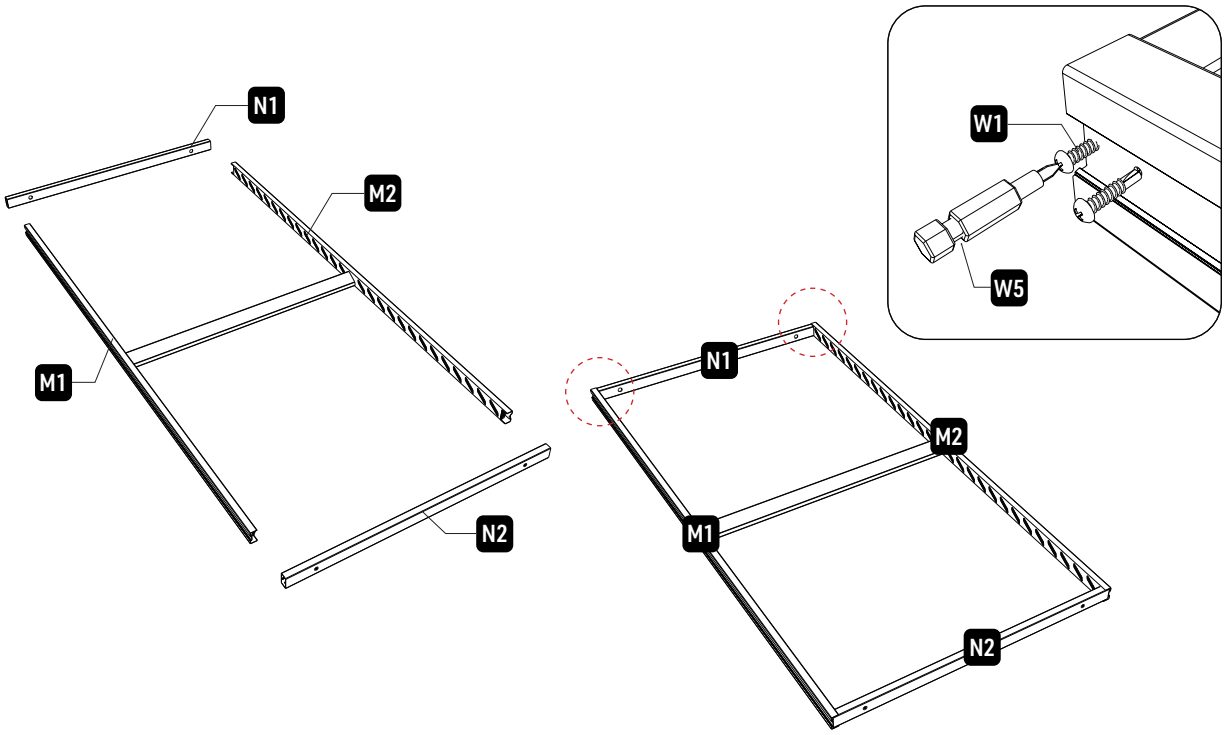

5

Install the adjustable base (W2) under the bottom frame. Please note do not screw in to tight.

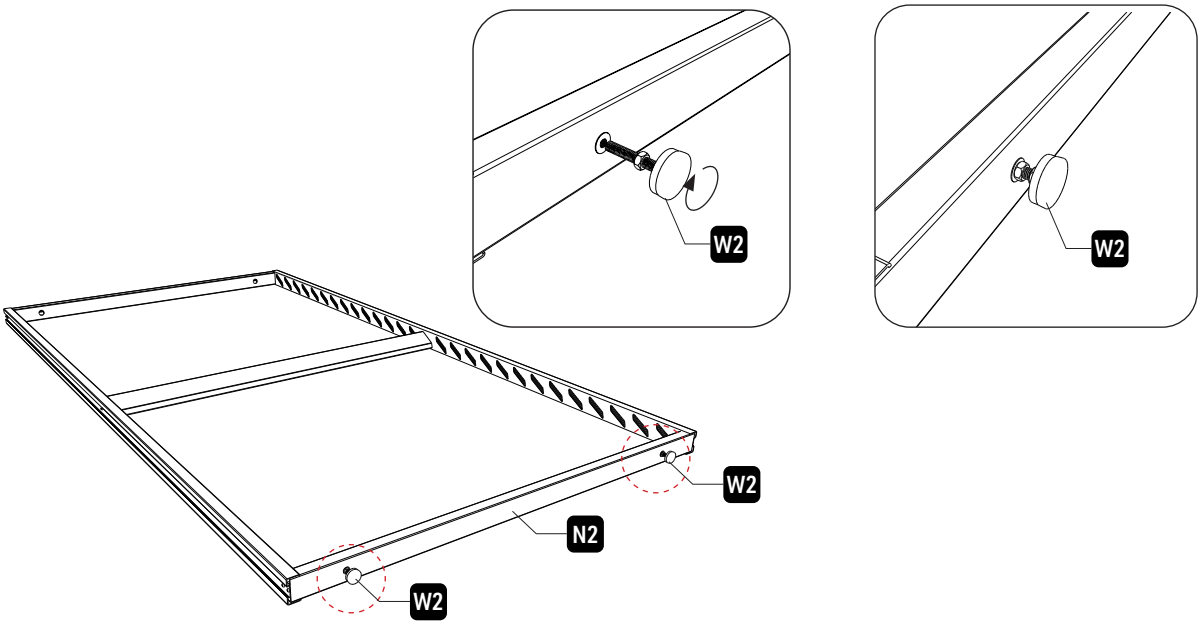

6

Insert back the two edging strips(H1) into the two side frame.

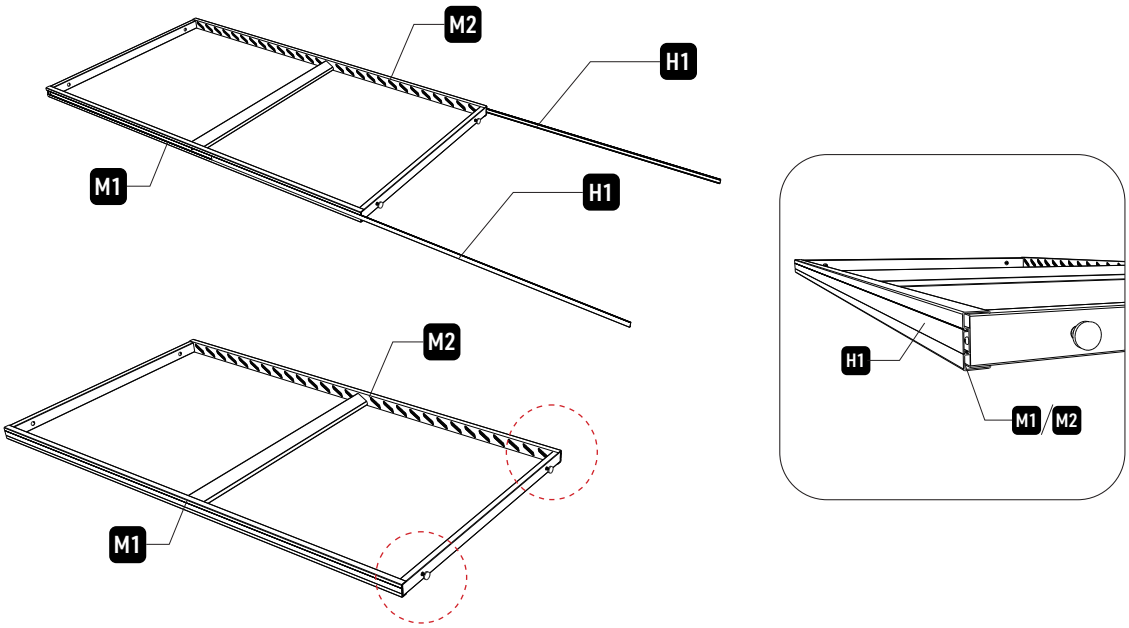

7

Place the privacy panel under the pergola as the diagram shows below.

Attention! The privacy panel should be aligned with the outer side of the beam.

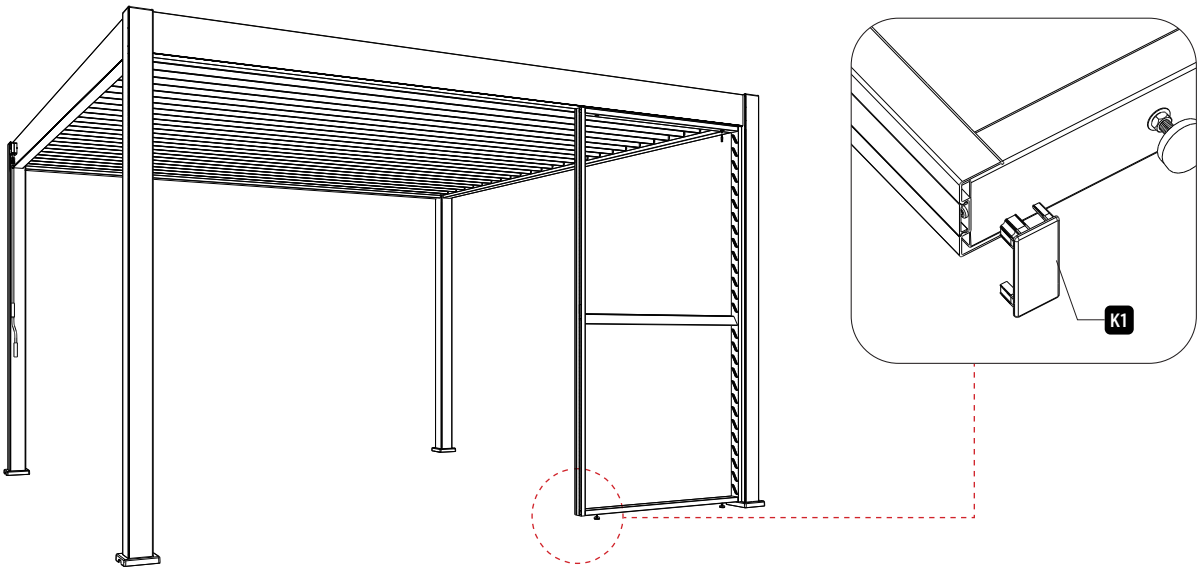

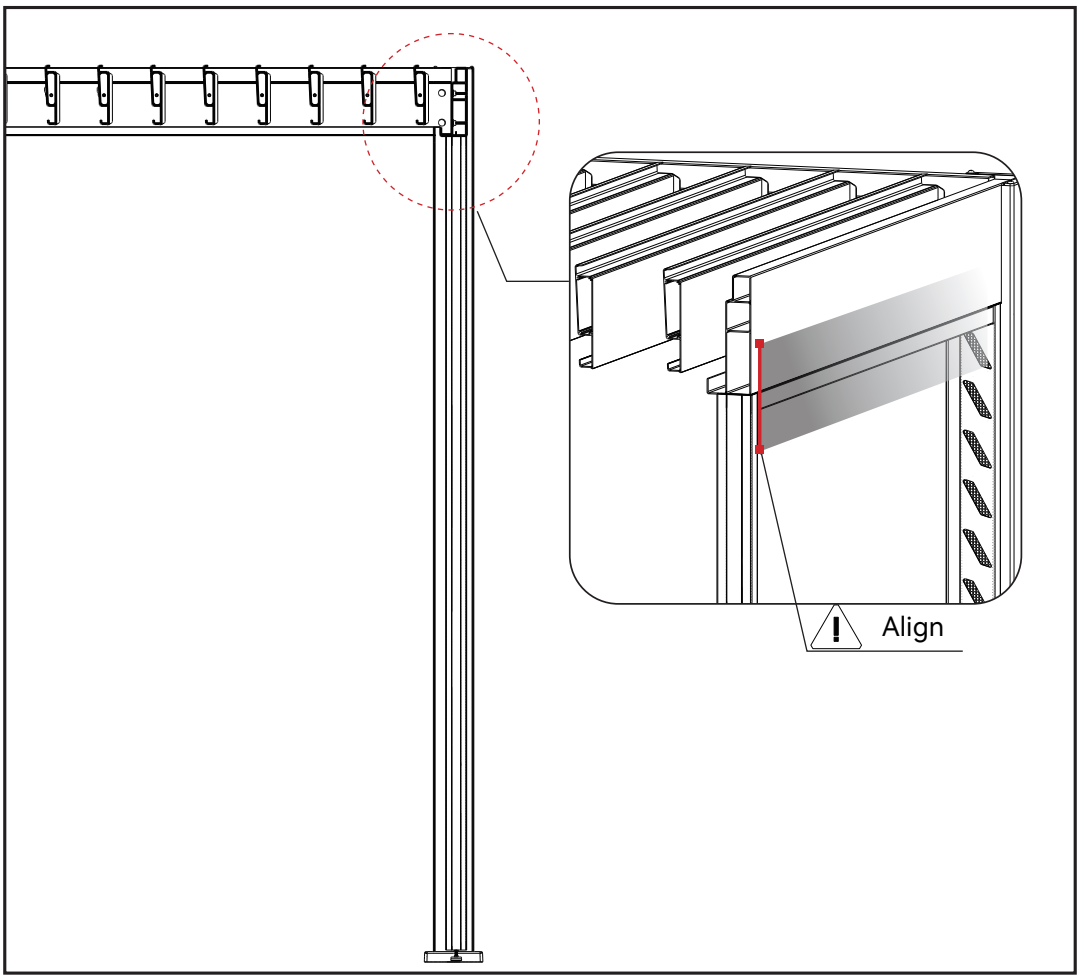

8

Adjust the adjustable bases again to make sure they just stand on the ground.

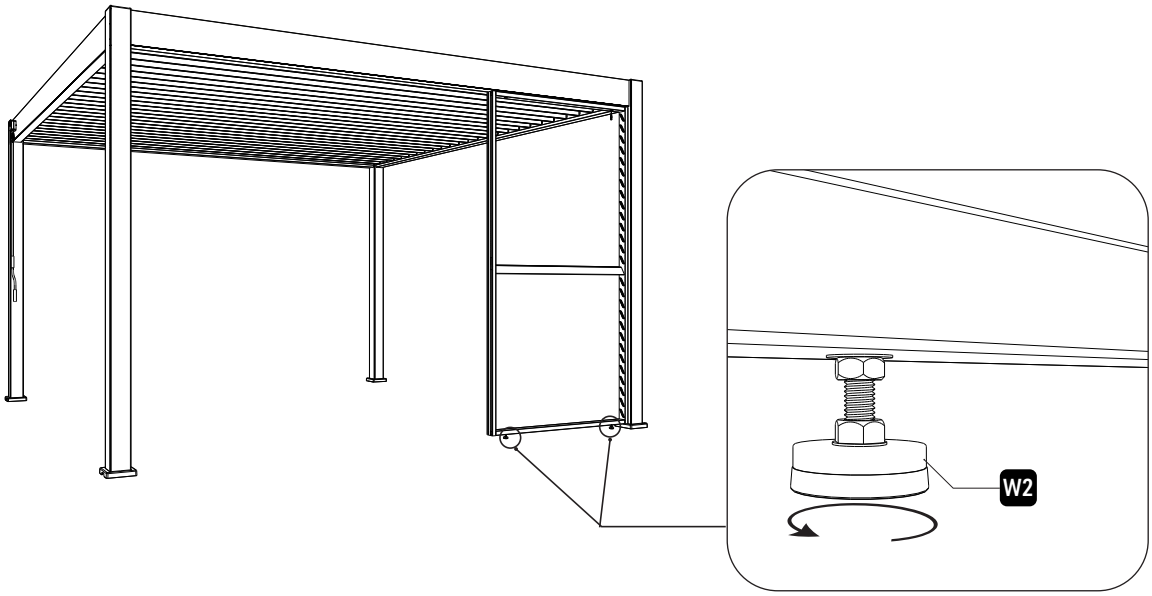

9

Please use the screw(W1) to attach the privacy panel frame with the post as the diagram shows below.

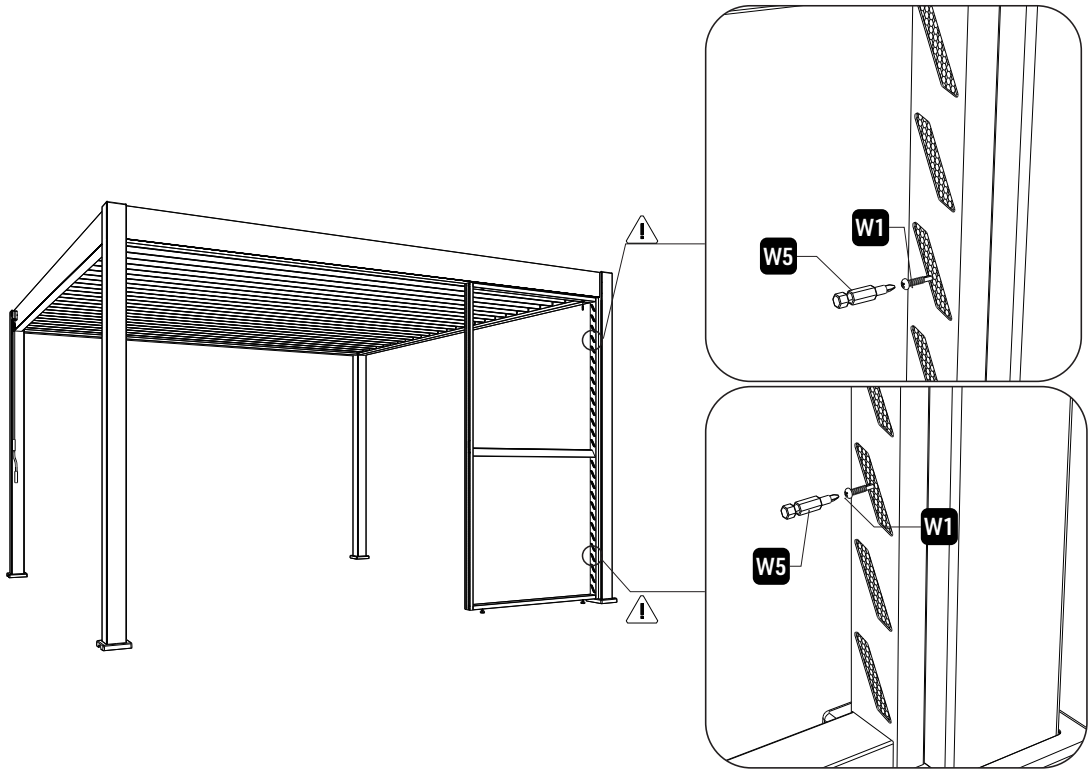

10

Attach the upper frame of the privacy panel by using screws(W1), then cover the hole with plastic caps(W3).

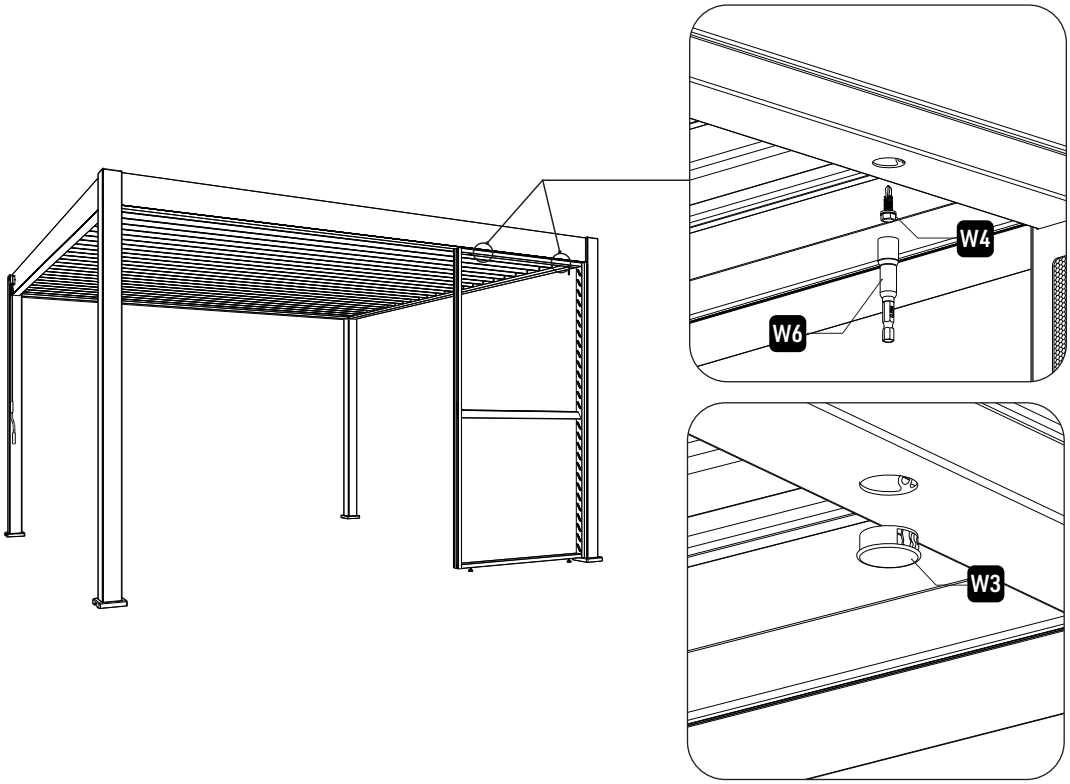

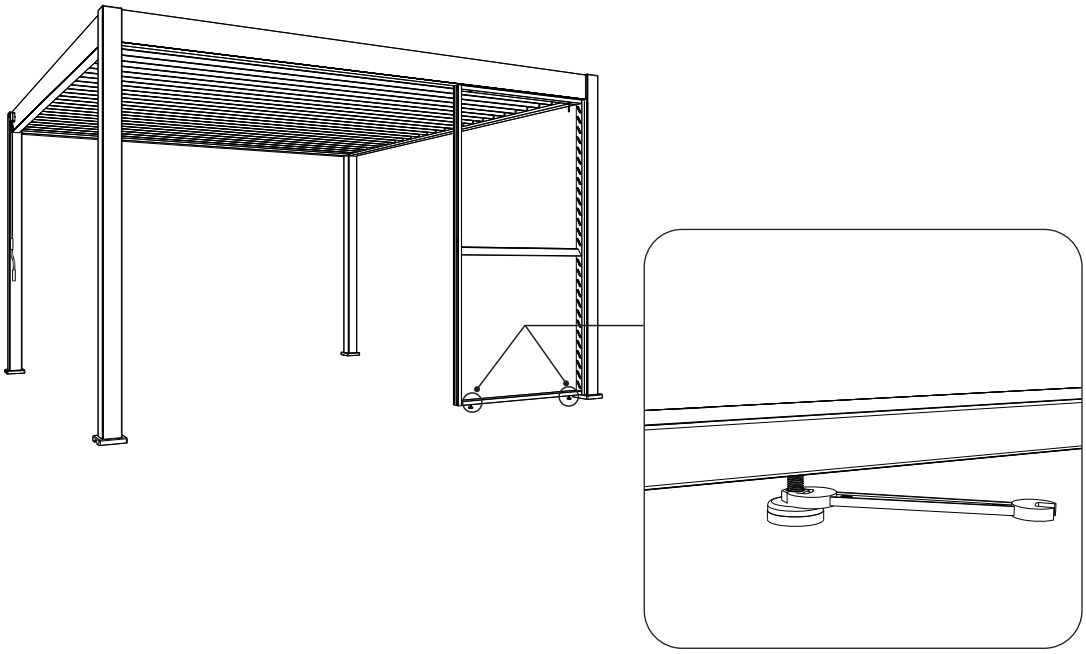

11

To install these short louvers, please press one end into the sponge, then insert the other end.

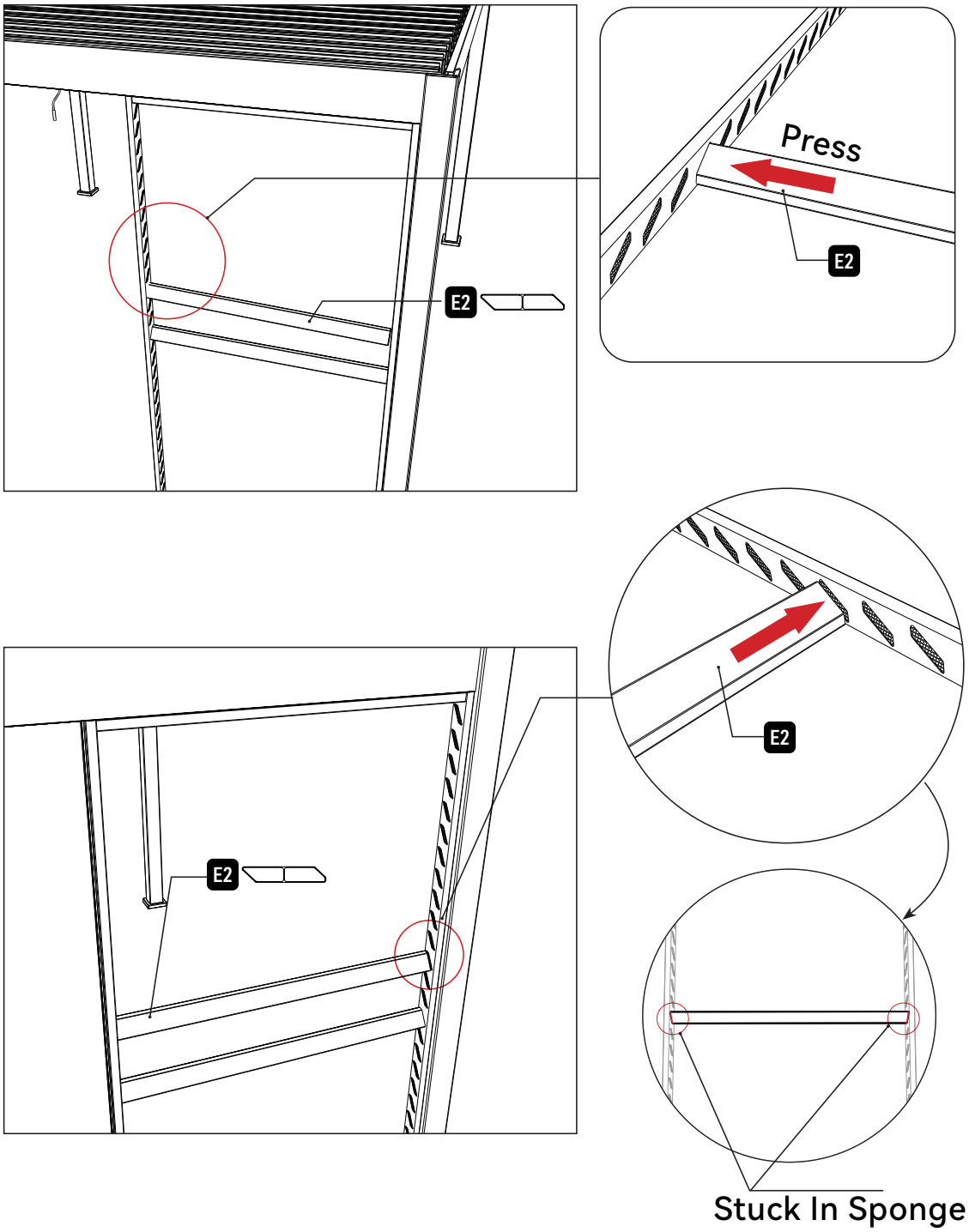

ADD+1

When installing two privacy panels, please repeat the same installation steps as above.

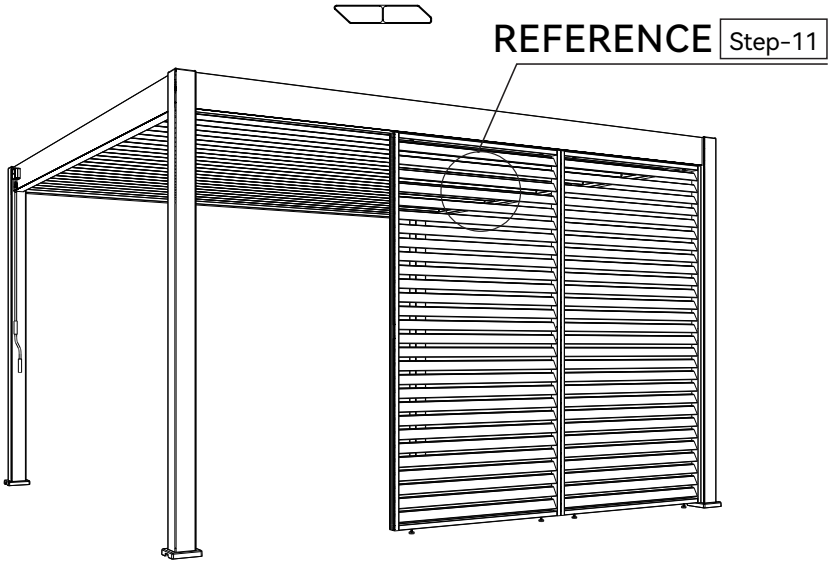

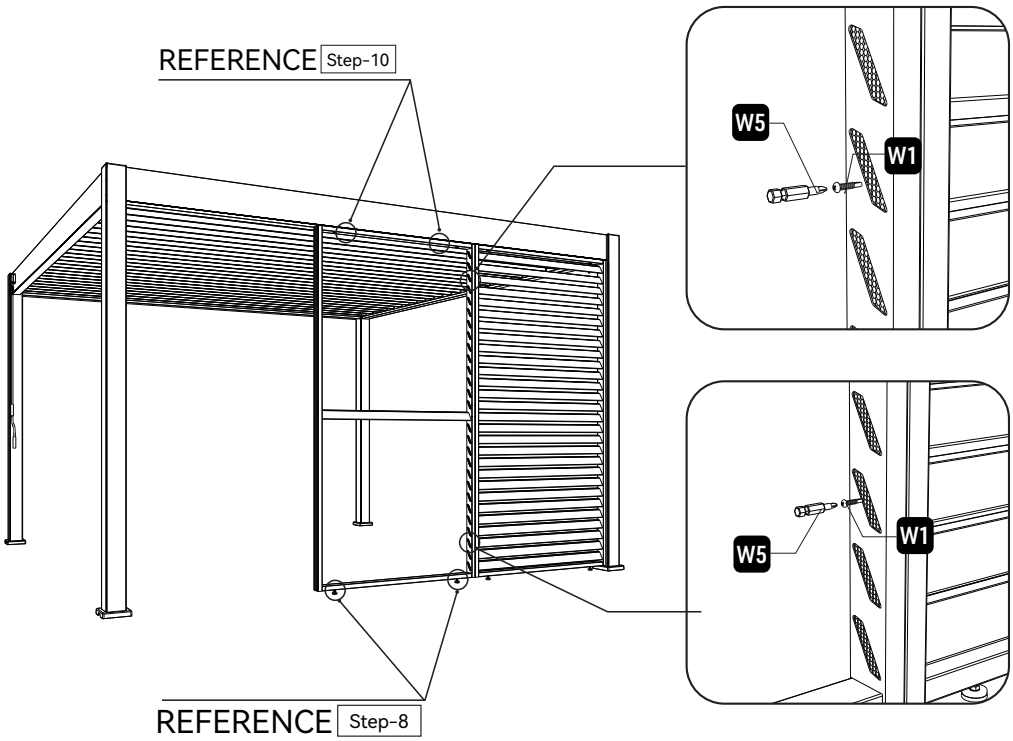

ADD+2

When installing three privacy panels, please repeat the same installation steps as above. Just remember when there is any connection, you always need to fix the privacy panel frame according to step 9.

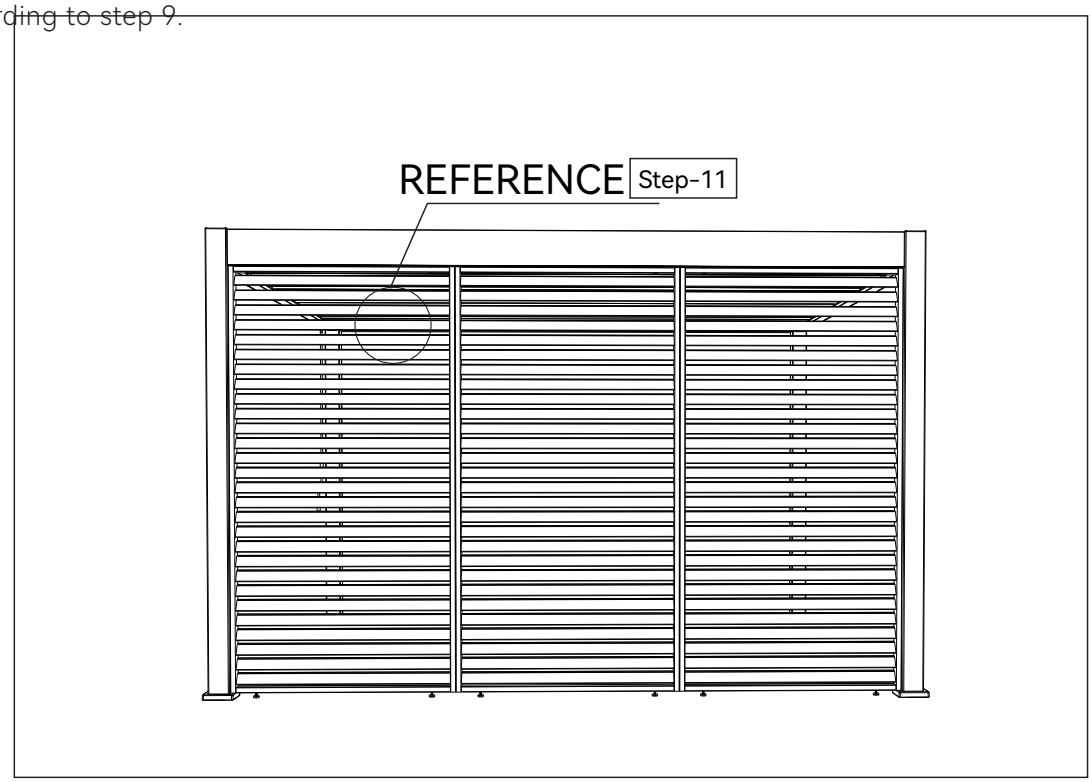

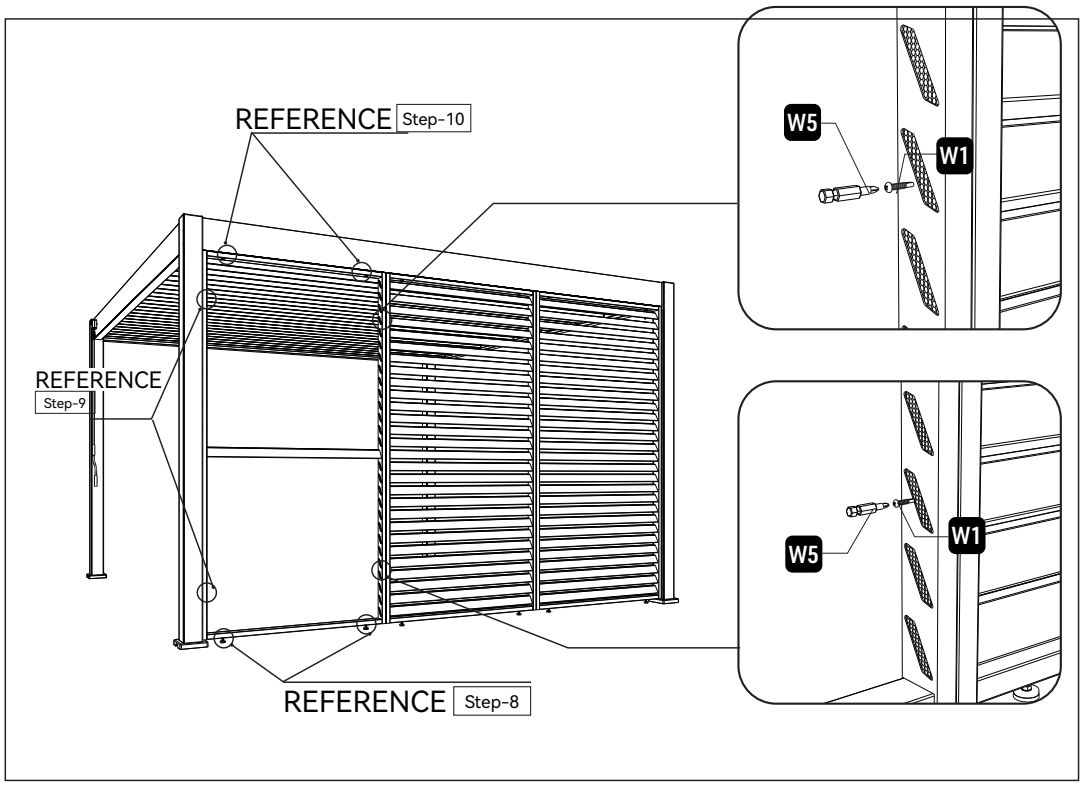

Caution: In regions with frequent strong wind conditions, the base corners shall be fixed using fasteners as shown in the diagram.

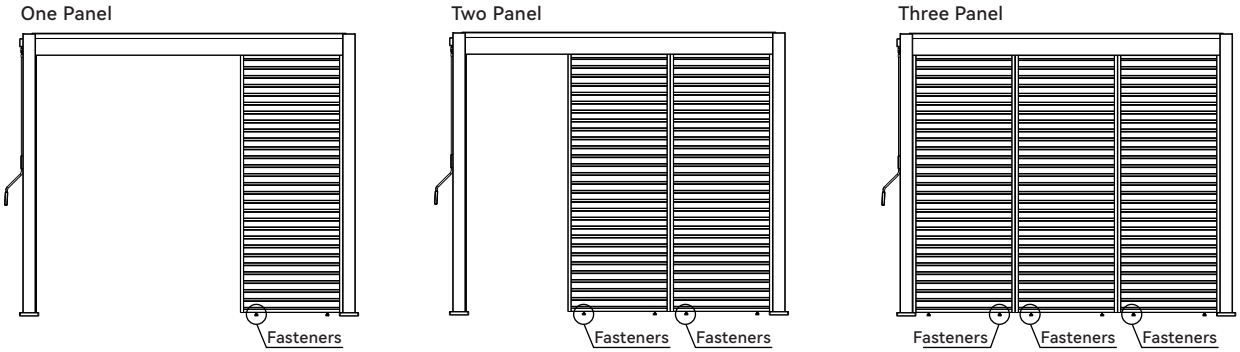

Fasteners

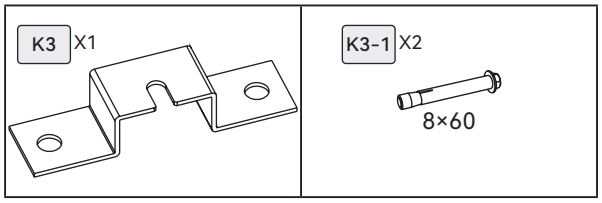

1

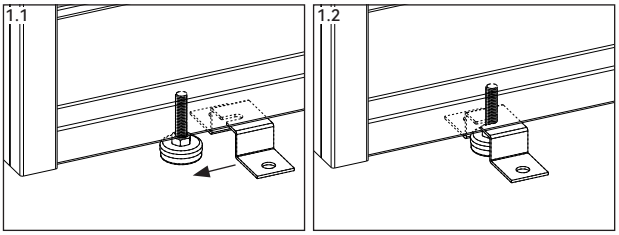

Clip the fasteners into the screws on the base corner support brackets.

2

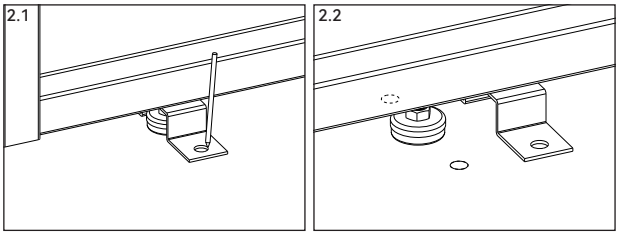

Mark the positions to be drilled with a marker, then move the fasteners aside.

3

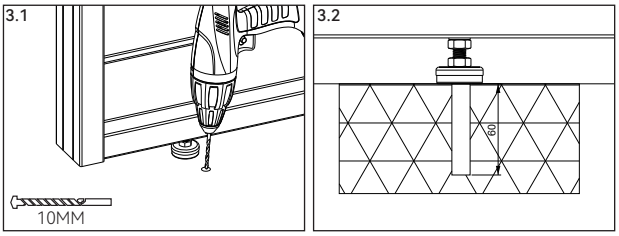

Drill downward to a depth of 60mm at the marked hole positions on both sides with a 10mm drill bit.

4

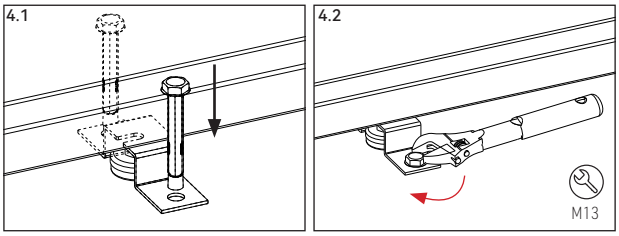

Fasten it firmly using a 13mm wrench.

@paragonoutdoorcompany

Paragon Group USA

Customer Service Contact Information: 1-877-782-4482

support@paragon-outdoor.com