Product Instruction

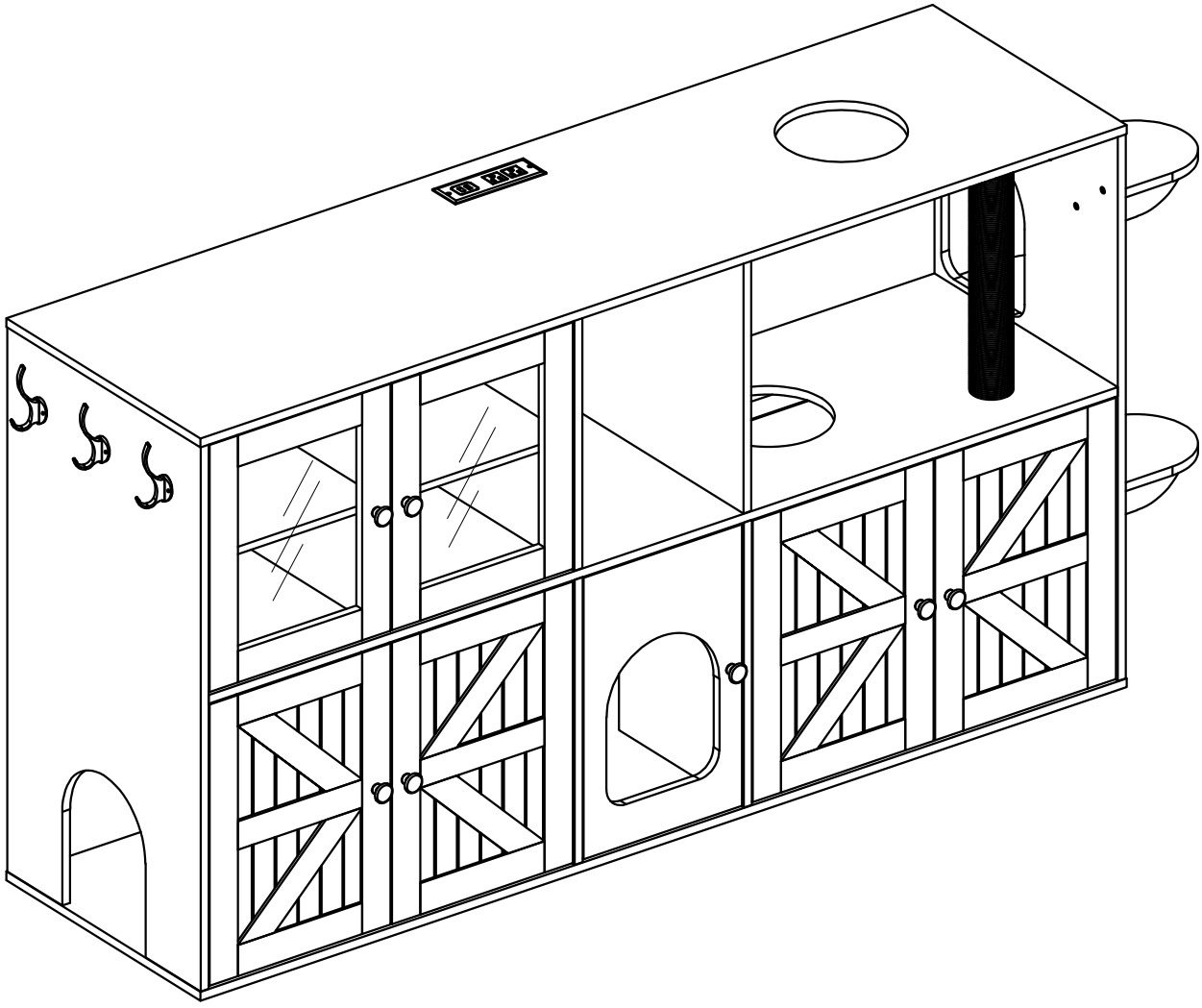

WARNING



This product Is NOT a Clothing Storage Unit (CSU).

DO NOT use It for clothing storage.

Improper use may cause furniture tipover.

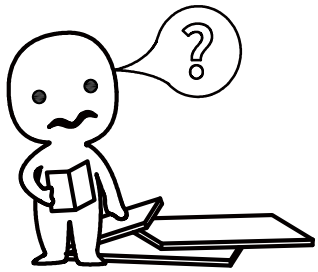

IMPORTANT INFORMATION!

please read the entire manual before starting to assemble and/or using this product.follow the manual thoroughly and keep it for further reference.

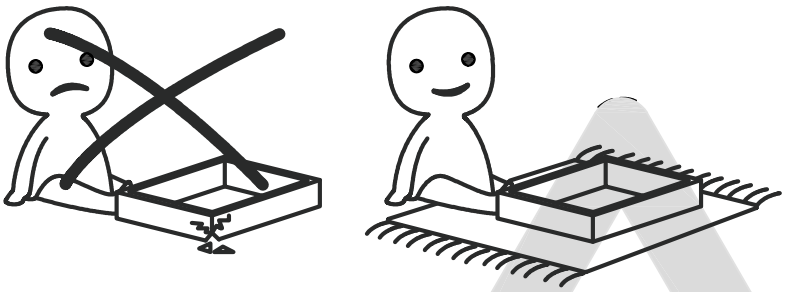

AVOID SCRATCHES!

In order to avoid scratching this furnuture should be assembled on a soft layer-could be a rug.

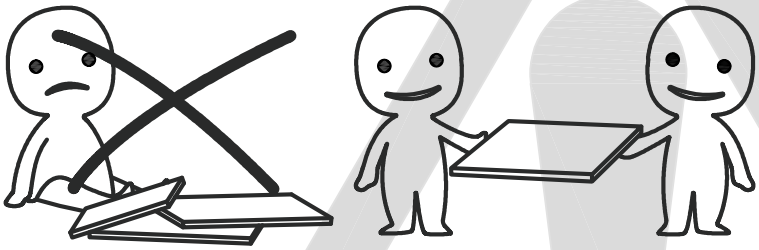

IMPROVE EFFICIENCY !

Try to find a partner to install with you, which can speed up the installation efficiency and shorten the time.

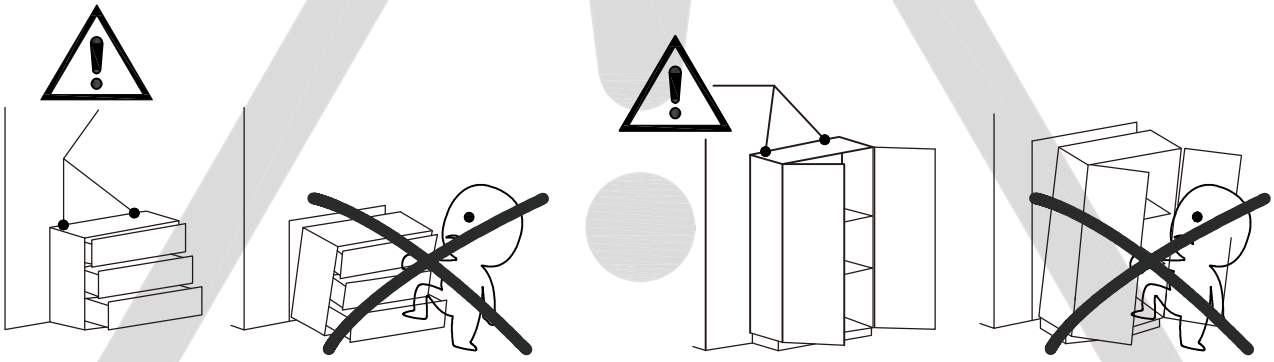

ANTI-TOPPLE WARNING !

Overturned furniture can cause serious or fatal crush injuries. To prevent tipping over, be sure to use the wall attachment, if not included with this product. Please purchase the wall attachment that fit your wall. If unsure, seek professional advice. Please read and follow each step of the instructions carefully.

IMPORTANT !

It is important that any product which is assembled using any kind of screw is re-tightened 2 weeks after assembly,and once every 3 months - in order to assure stability through-out the lifespan of the product.

For regular maintenance and cleaning of the product, for the frame, please use a rag dipped in neutral detergent to fully wipe it, and then dry it with a clean rag.For glass materials, wipe with a rag dampened with water glass cleaner, and then dry with a dry rag.

Do not use an electric screwdriver, and do not use too much force when installing, because the board is easy to break.

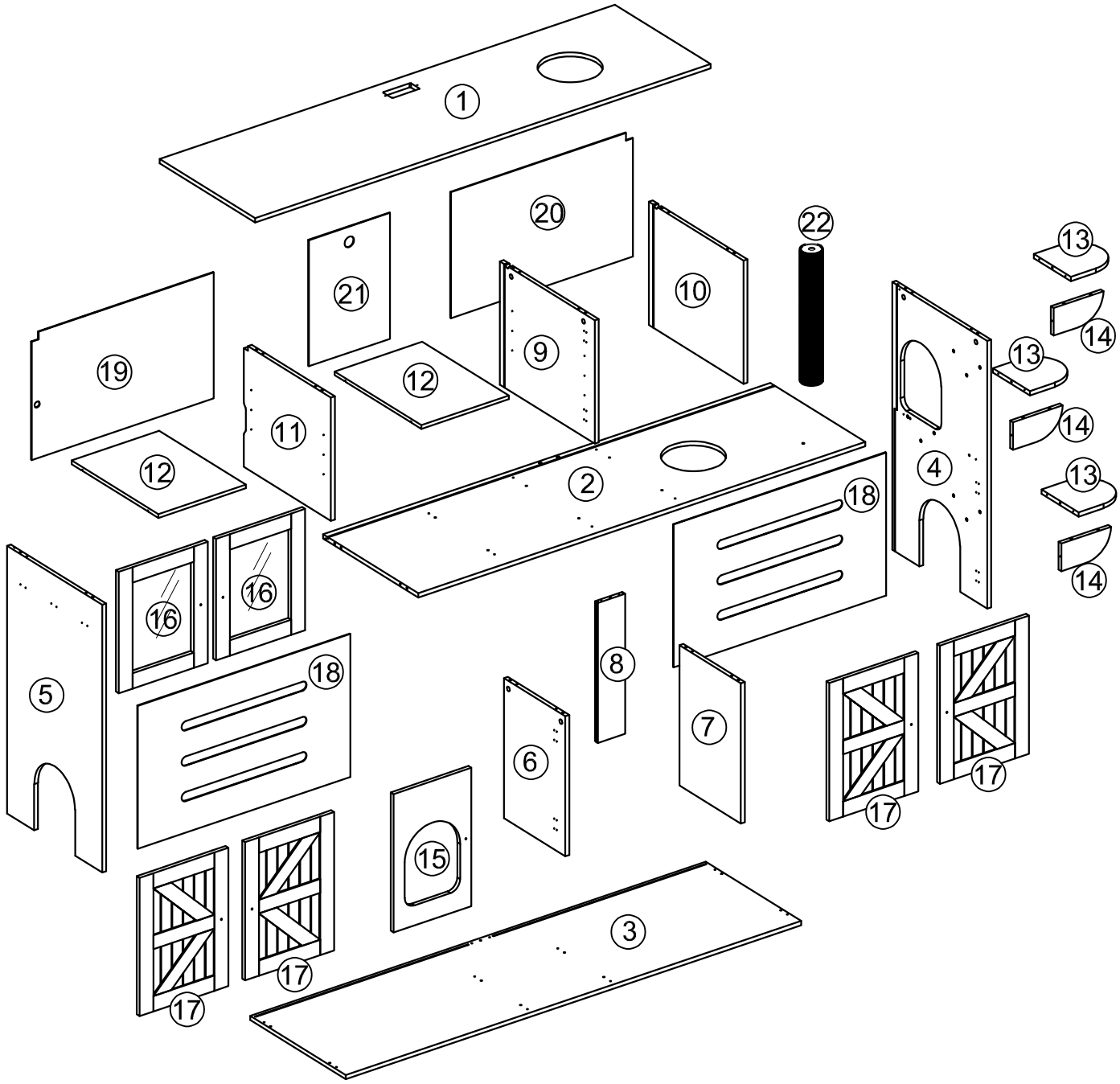

Note:

1. 50% Tighten before fixing all scews, Allen wrench is recommendedinstead of an electric drill.
2. Place the item on a flat ground to adjust and make sure it remains stable.
3. Tighten up all screw with tools gradually.
4. If screw are not aligned with holes furing assembly, please loosen all the other screws to 50% and continue the assembly process.
5. If the item is not stable, please loosen all screws, adjust it on a flat ground and tighten up all screws again.
6. Note: If one or some screws are fully tighten during assembly, chances are the others will not be aligned with holes. In addition, all the holes are designed to be relatively larger to provide more space for the adjustment of the screws.

CARTON CONTENT:

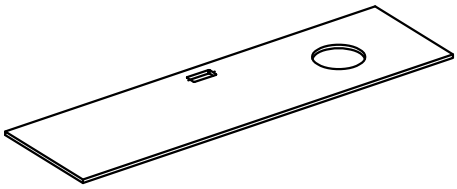

1 x 1

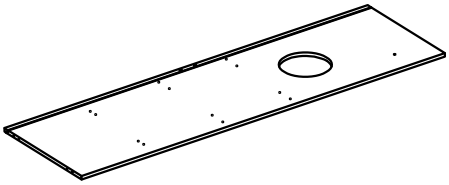

2 x 1

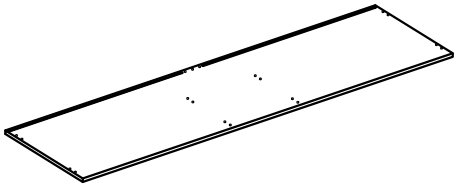

3 x 1

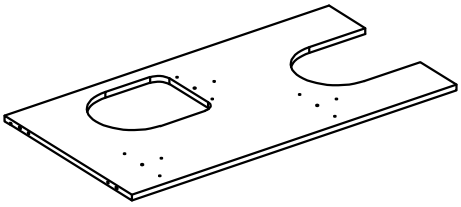

4 x 1

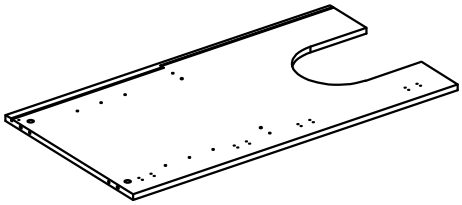

5 x 1

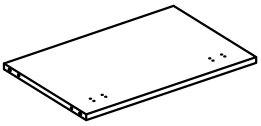

6 x 1

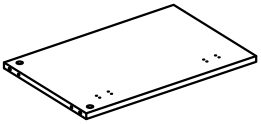

7 x 1

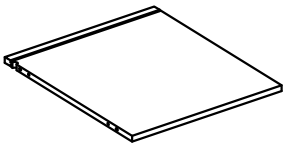

9 x 1

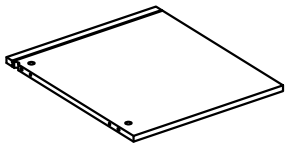

10 x 1

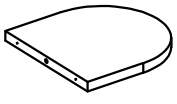

13 x 3

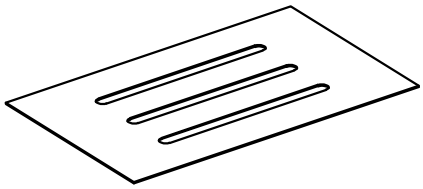

18 x 2

CARTON CONTENT:



8 x 1

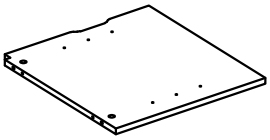

11 x 1

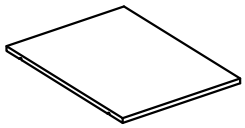

12 x 2

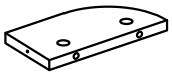

14 x 3

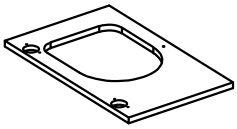

15 x 1

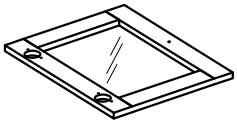

16 x 2

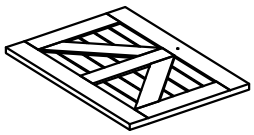

17 x 4

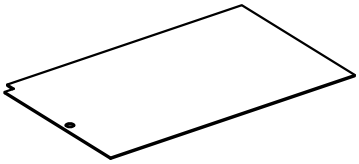

19 x 1

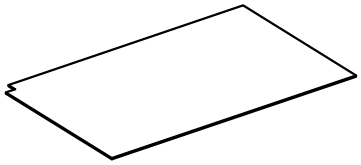

20 x 1

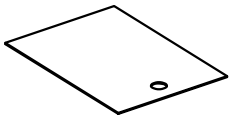

21 x 1



22 x 1

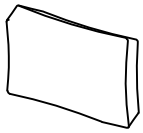

HARDWARE

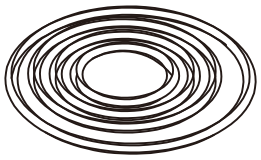

23 x 1

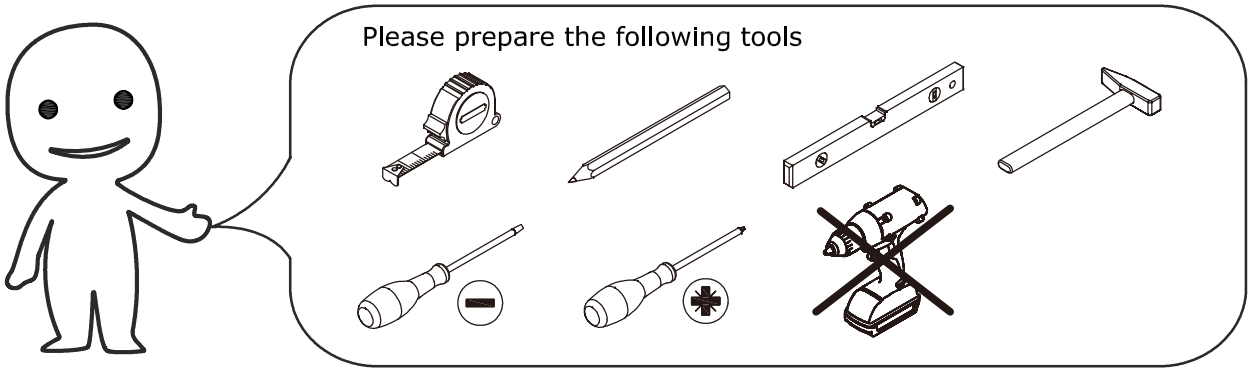

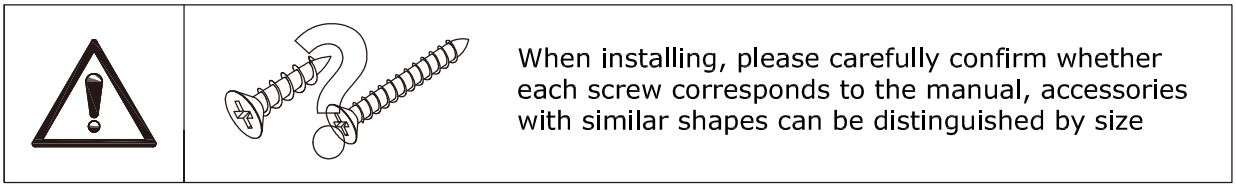

Ax21+2	Bx21+2	Cx27+2	Dx40+2	Ex92+3
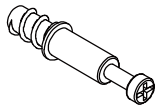	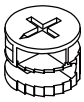	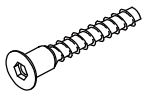		
∅6 x 33 mm	∅15 x 9.5 mm	M5X45 mm	Ø6X30 mm	M3.5 x 14 mm

Fx14	Gx6+1	Hx3	Ix28+2	Jx28+2
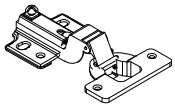				
	M3 x 14 mm			M3 x 16 mm

Kx8+4	Lx2	Mx23	Nx7	Ox7
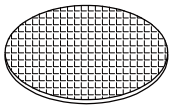	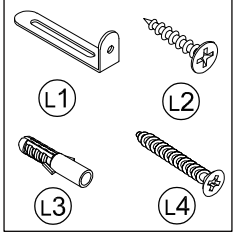	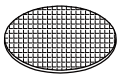		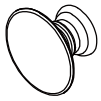
	L1 L2 L3 L4		M4 x 18 mm	

Px1	Qx1	Wx8+1	Sx1
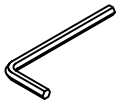	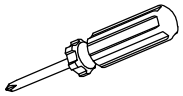		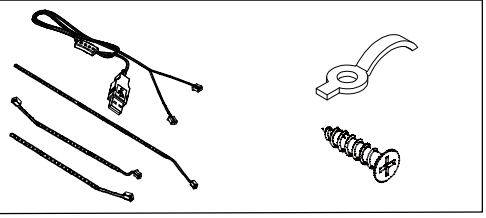
M3			

Rx3	Xx1	Yx1	Zx1
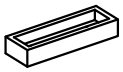	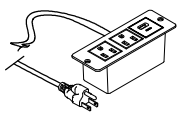		

1

Note: The plastic trim strip is pre-installed on the product, but if it peels off during use, we recommend that you replace it with the spare plastic trim strip included !

As shown in the figure, please tear one end of No.23 with adhesive and place it in the molding place of No. 01, No.02, No.04, No. 05 and No.15 plates. From here on, stick it evenly in the molding place for a week, and remove the excess part.

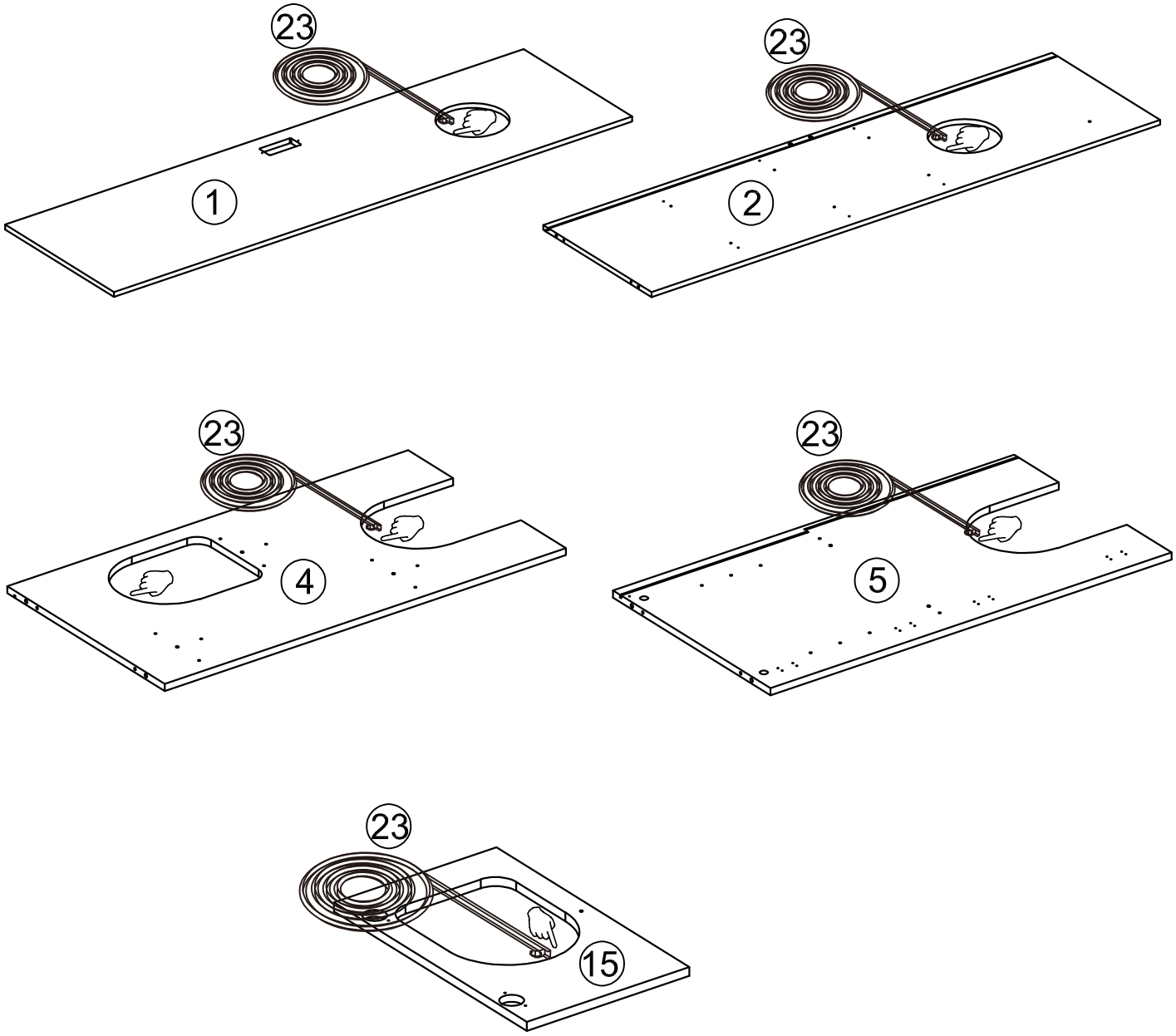

2

Cx6	Dx6	P
Ø5X45 mm	Ø6 x 30 mm	

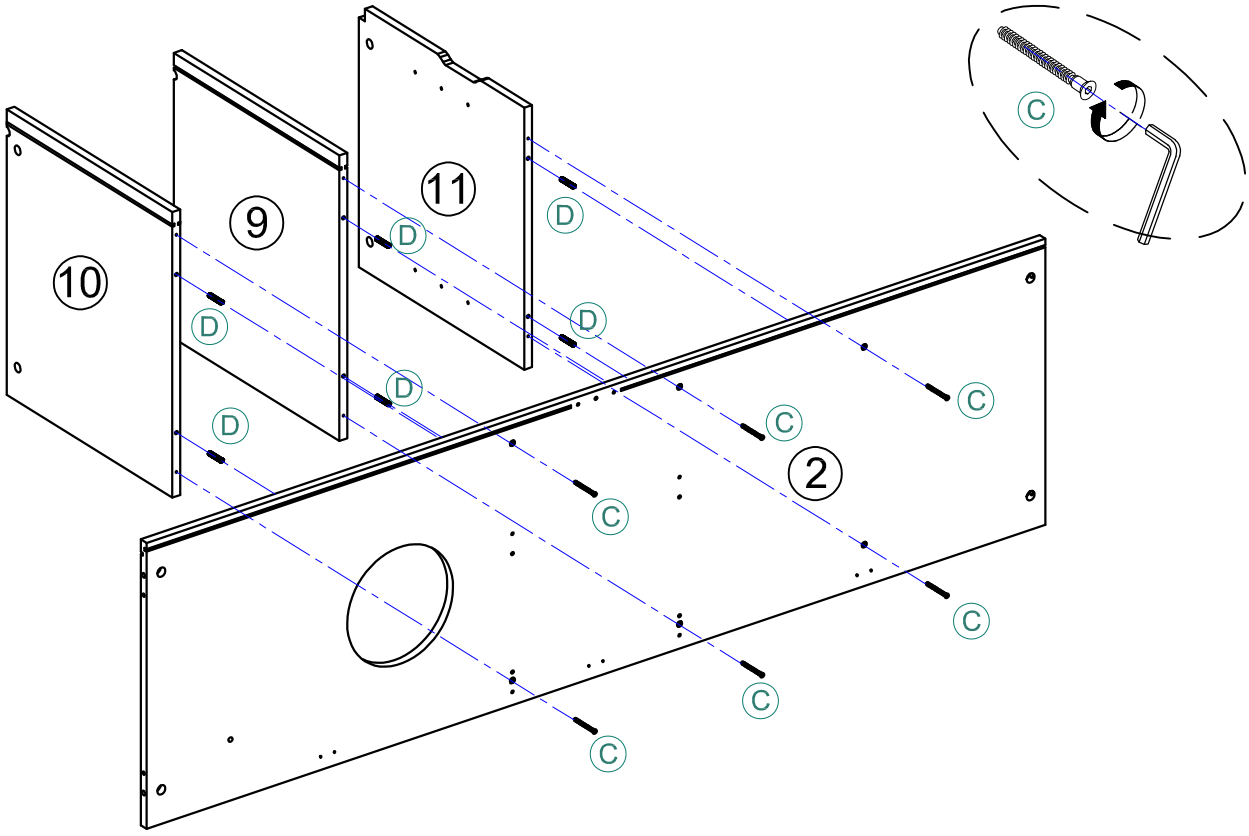

3

Cx2	Dx1	P
Ø5X45 mm	Ø6 x 30 mm	

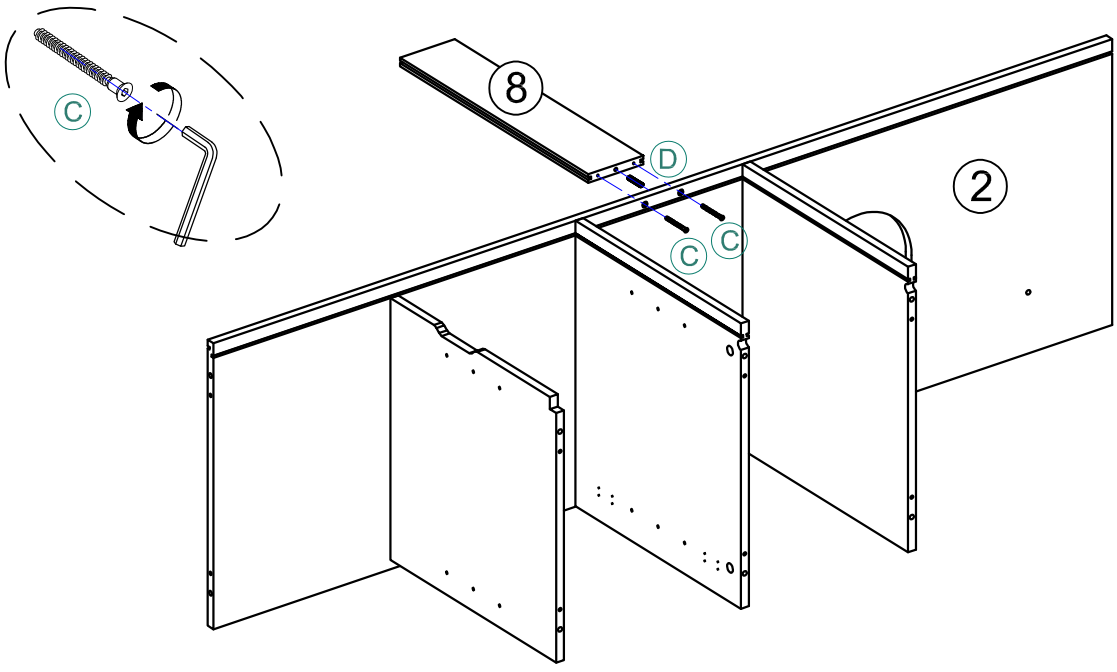

4

A x 2	Q
Ø6 x 33 mm	

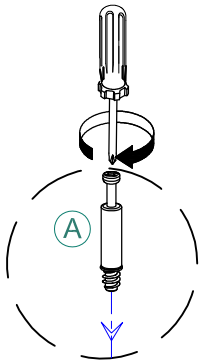

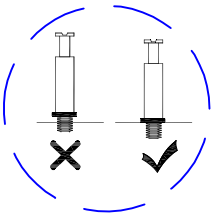

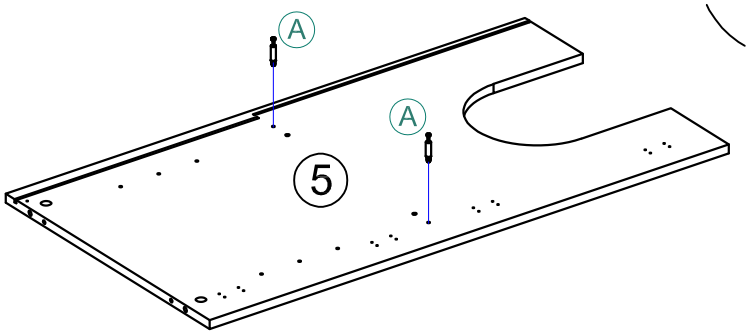

5

B x 2	Dx2	Q
Ø15 x 9,5 mm	Ø6 x 30 mm	

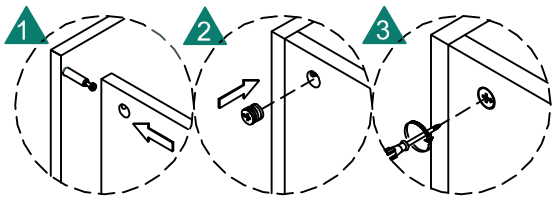

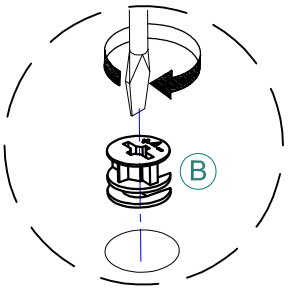

6

A x 3	B x 3	Q	Dx3
Ø6 x 33 mm	Ø15 x 9,5 mm		Ø6 x 30 mm

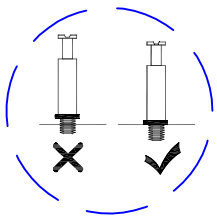

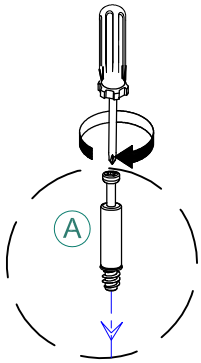

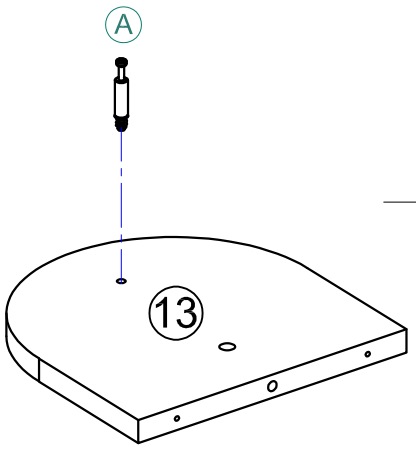

x3

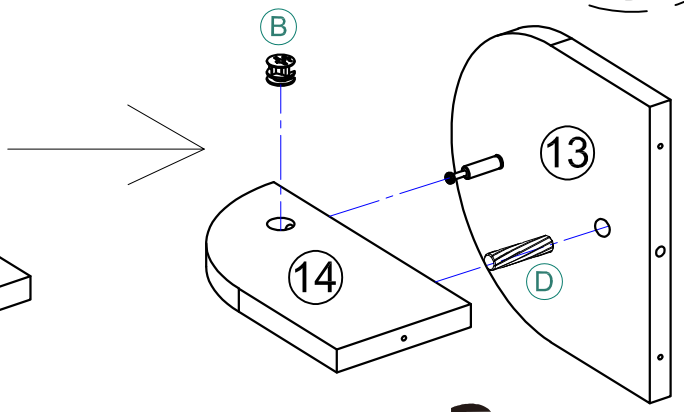

x3

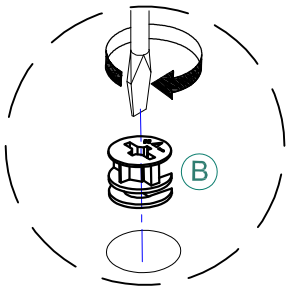

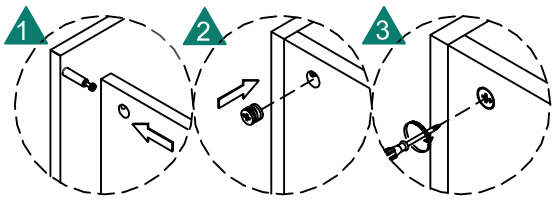

7

A x 2	Q
Ø6 x 33 mm	

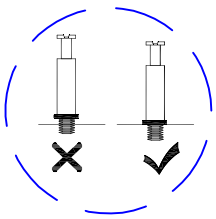

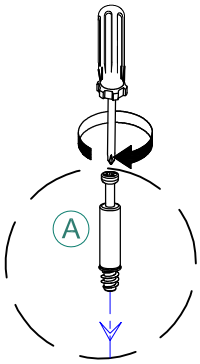

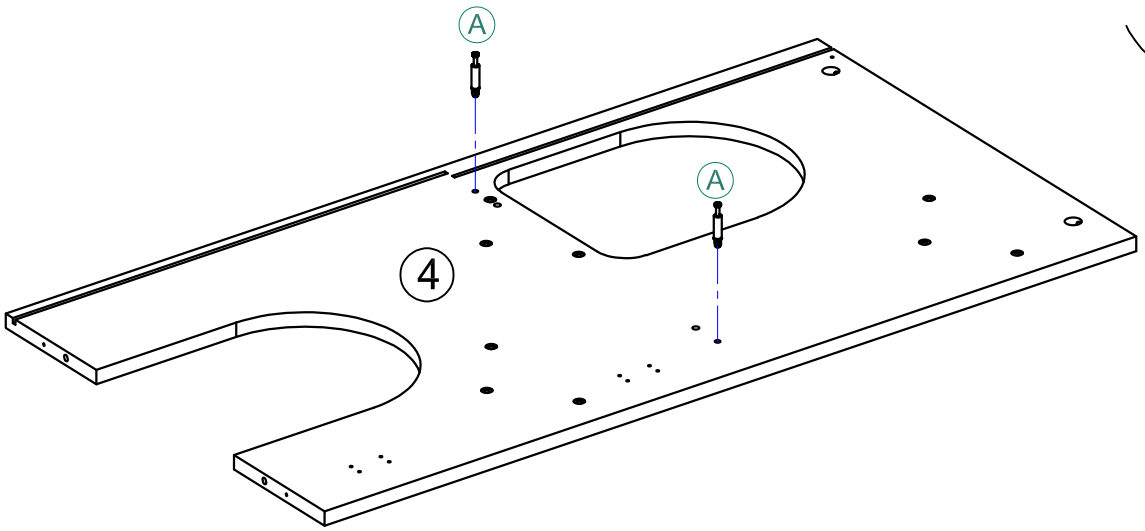

8

Cx9	Dx3	P
Ø5X45 mm	Ø6 x 30 mm	

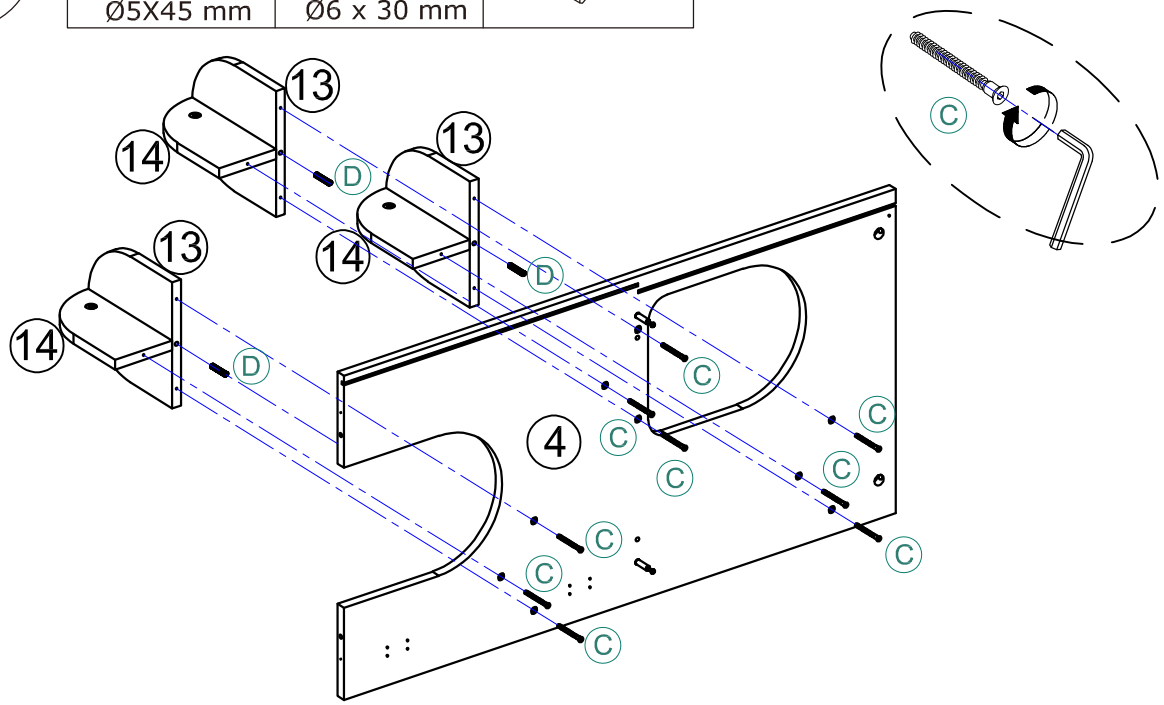

9

B x 2	Dx2	Q
Ø15 x 9,5 mm	Ø6 x 30 mm	

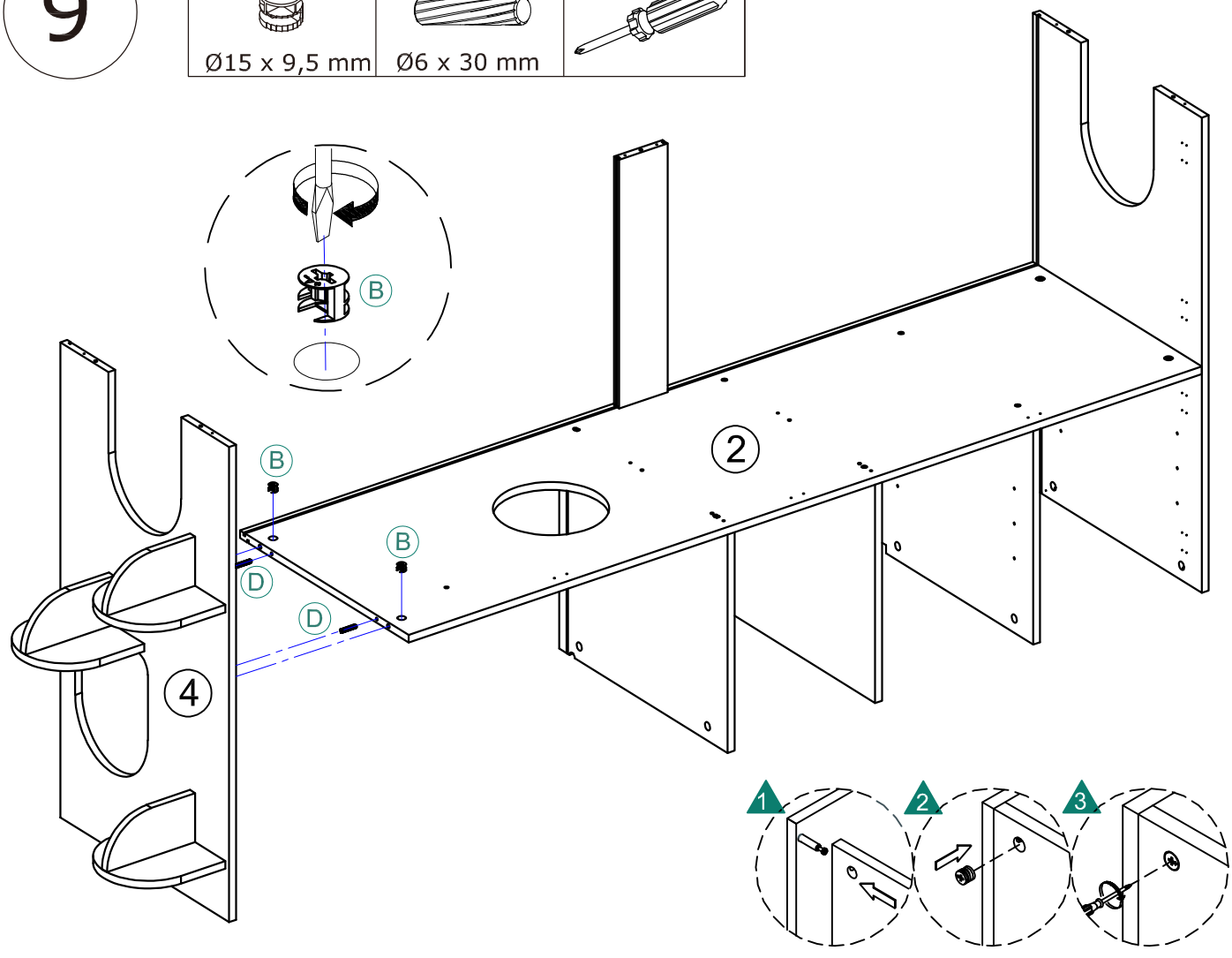

10

A x 4	Q
Ø6 x 33 mm	

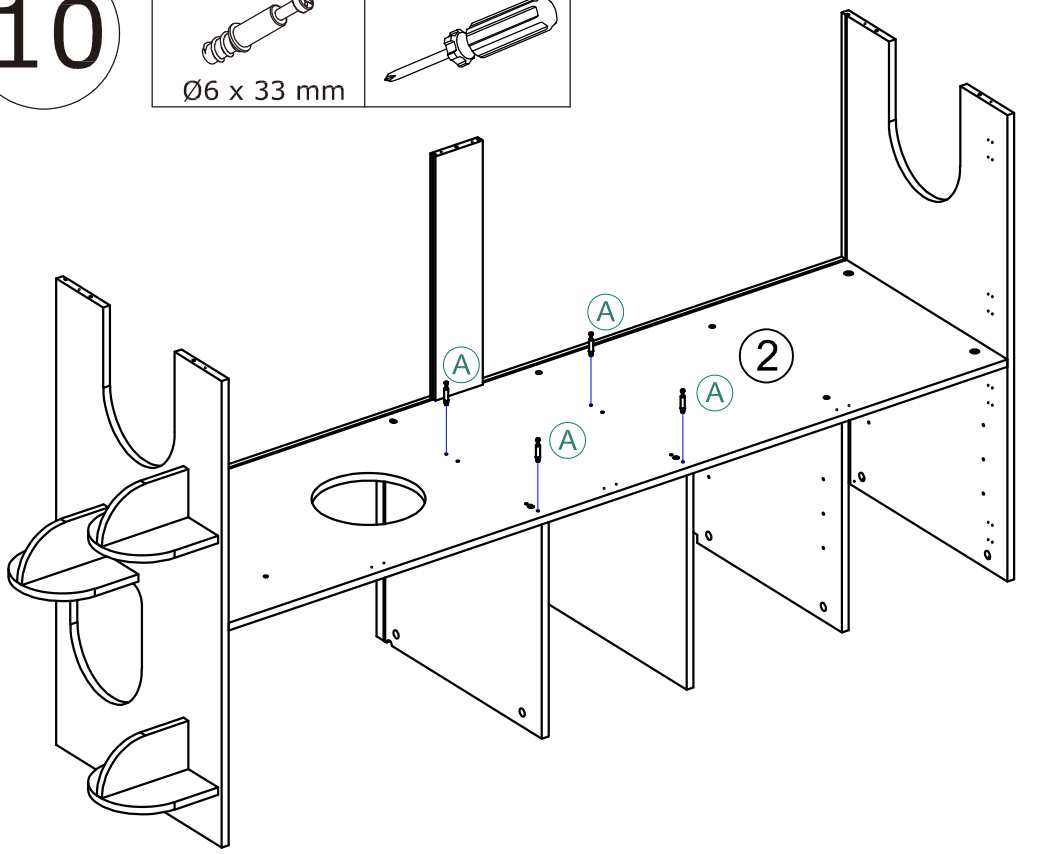

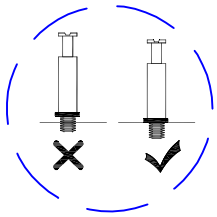

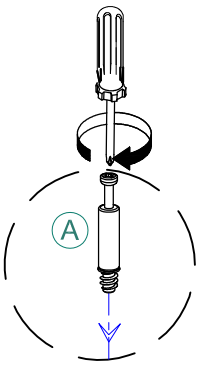

11

B x 2	Dx2	Q
Ø15 x 9,5 mm	Ø6 x 30 mm	

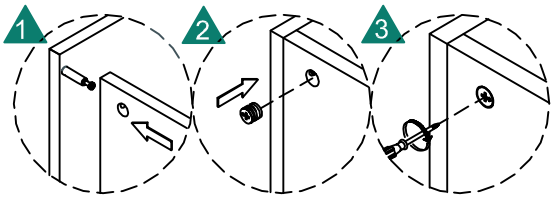

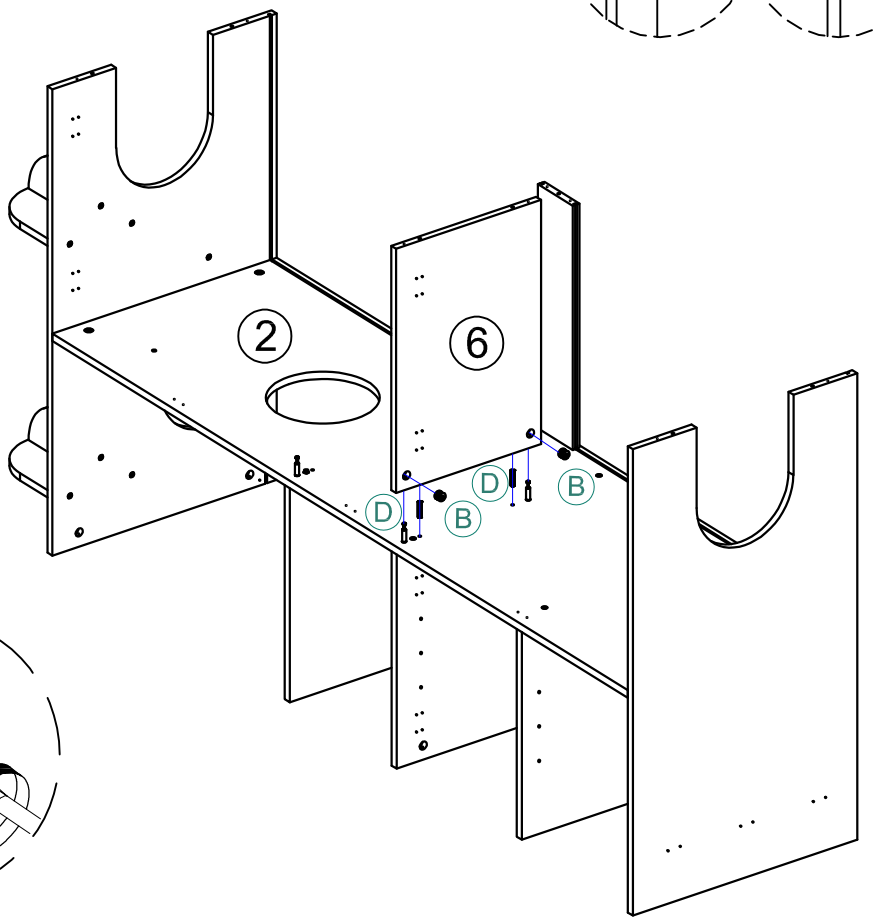

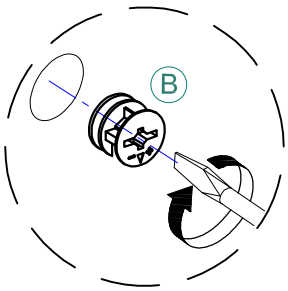

12

B x 2	Dx2	Q
Ø15 x 9,5 mm	Ø6 x 30 mm	

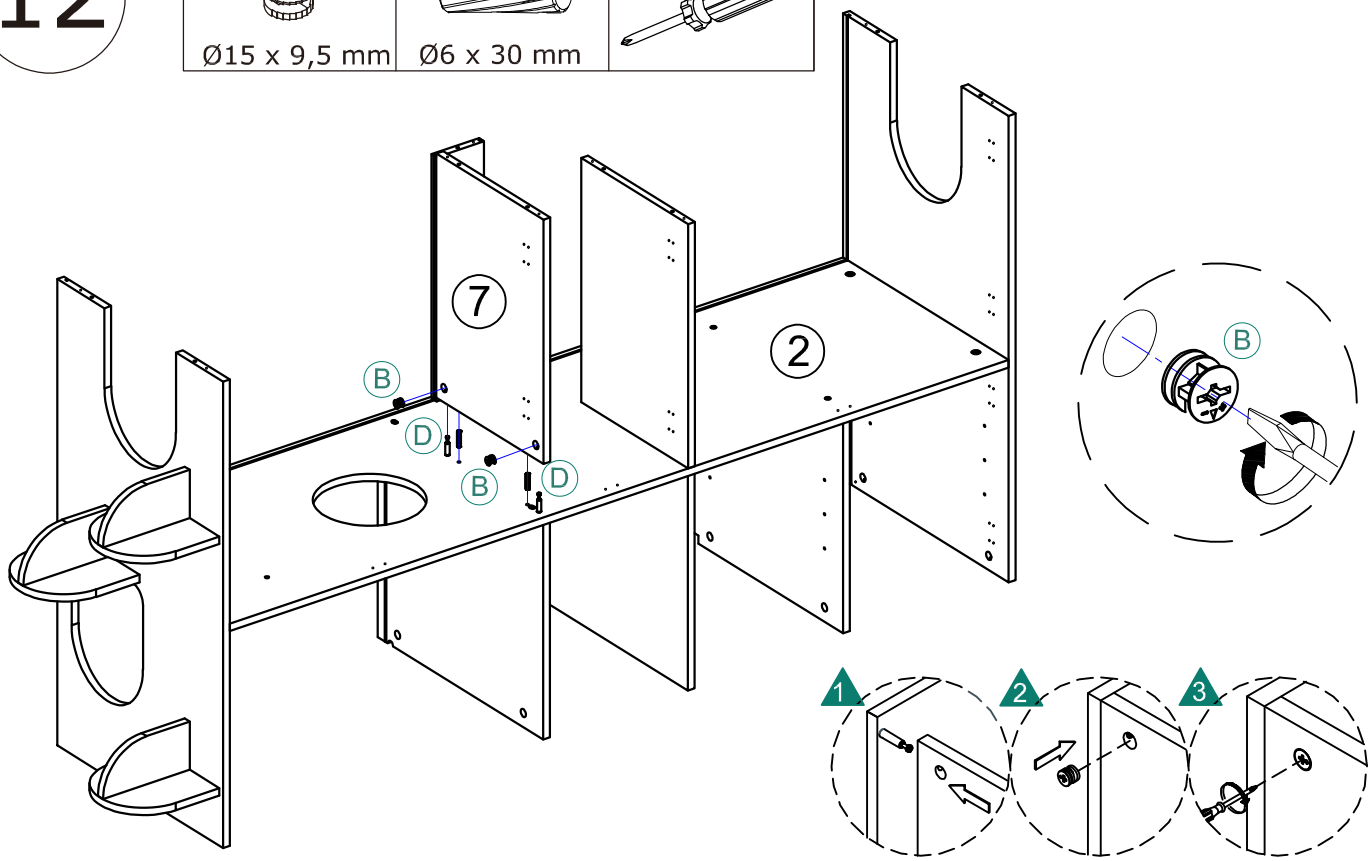

13

Dx9	Rx3	Ex6
Ø6 x 30 mm		M3.5 x 14 mm

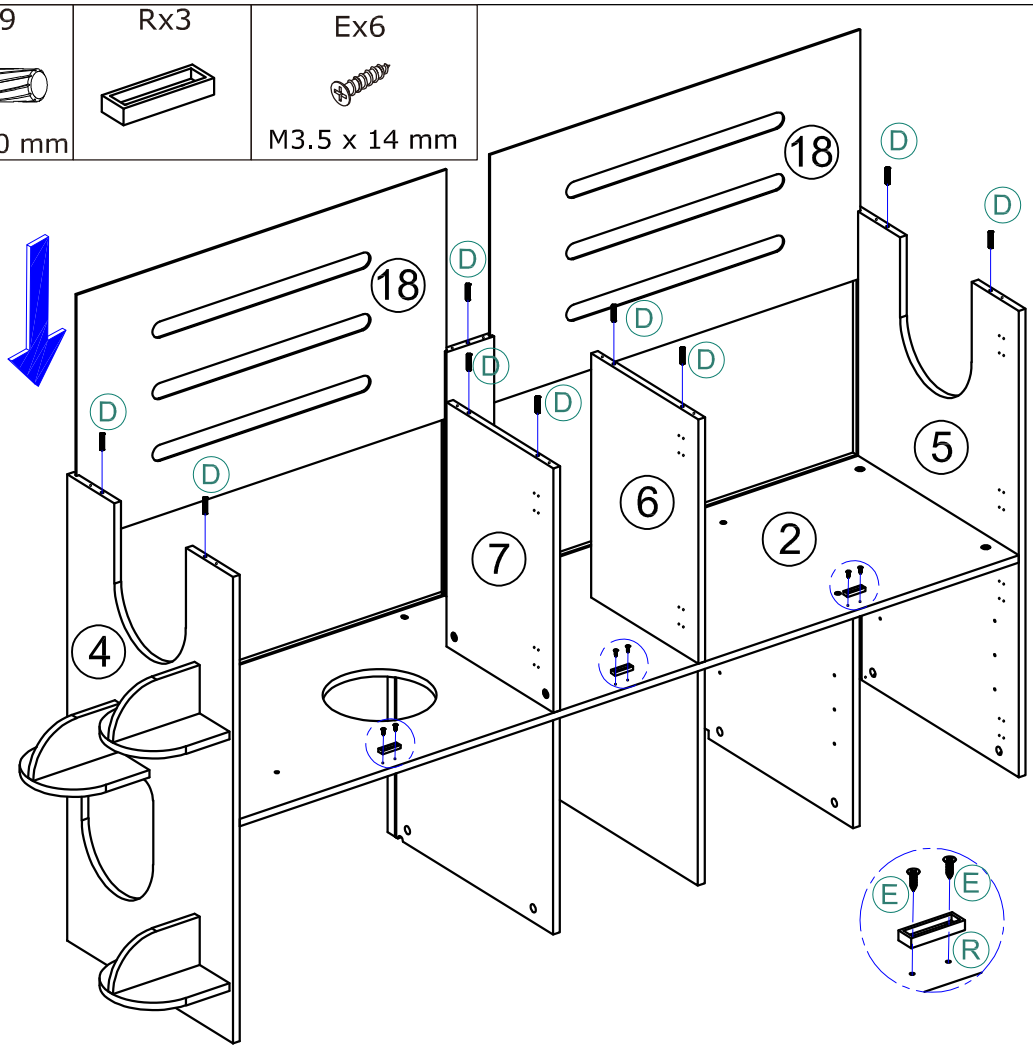

14

Cx10	Kx8	P
 Ø5X45 mm	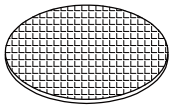	

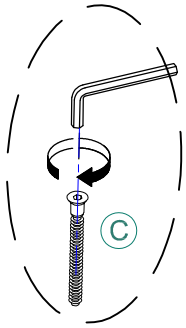

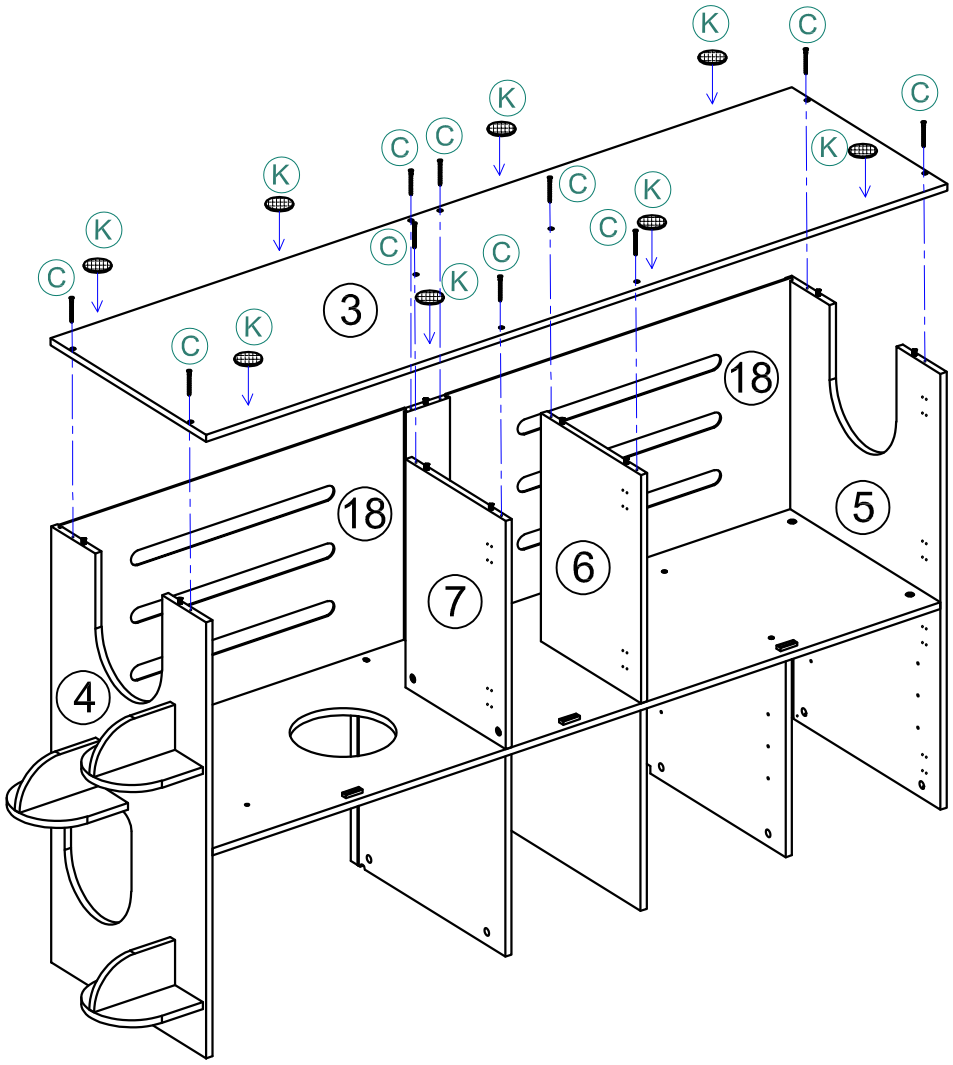

Turn over 180°

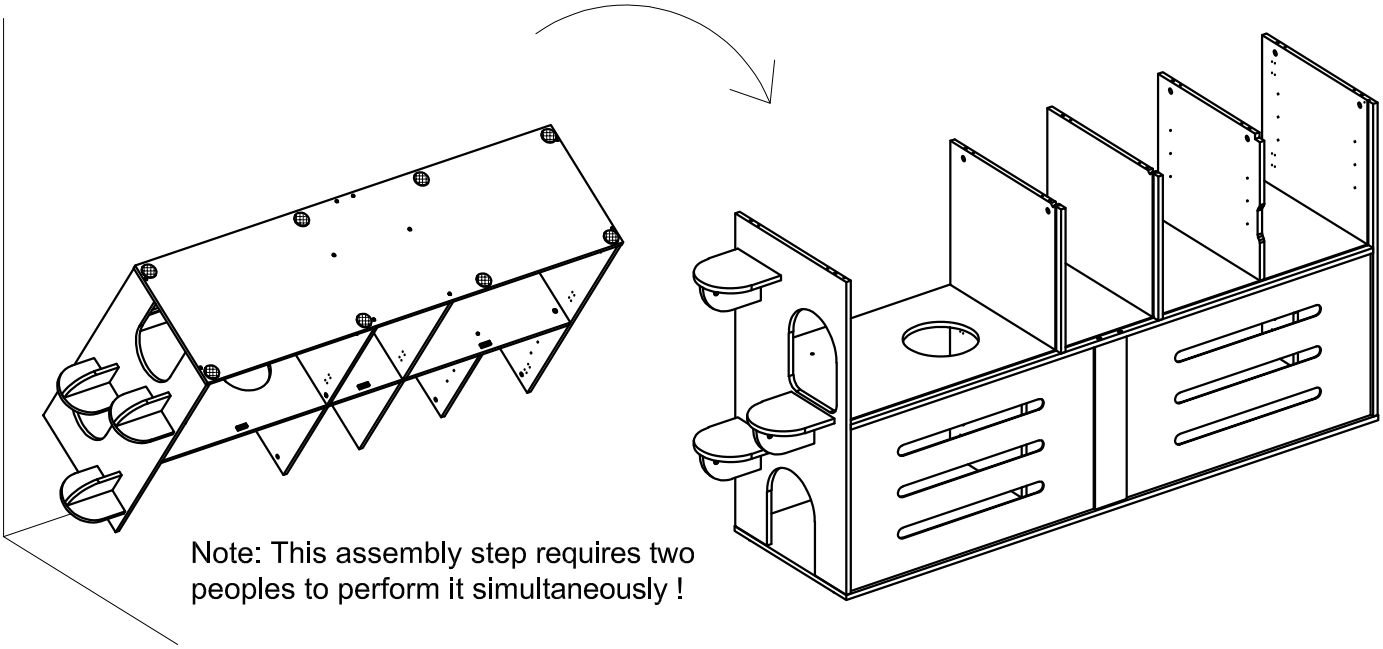

Note: This assembly step requires two peoples to perform it simultaneously !

15

Dx10



Ø6 x 30 mm

16

L1x2

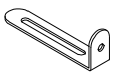

L2x2



M4 x 14 mm

Q

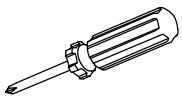

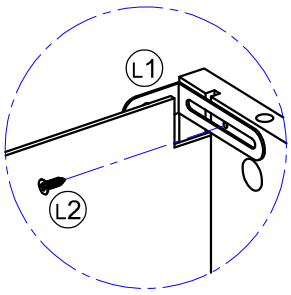

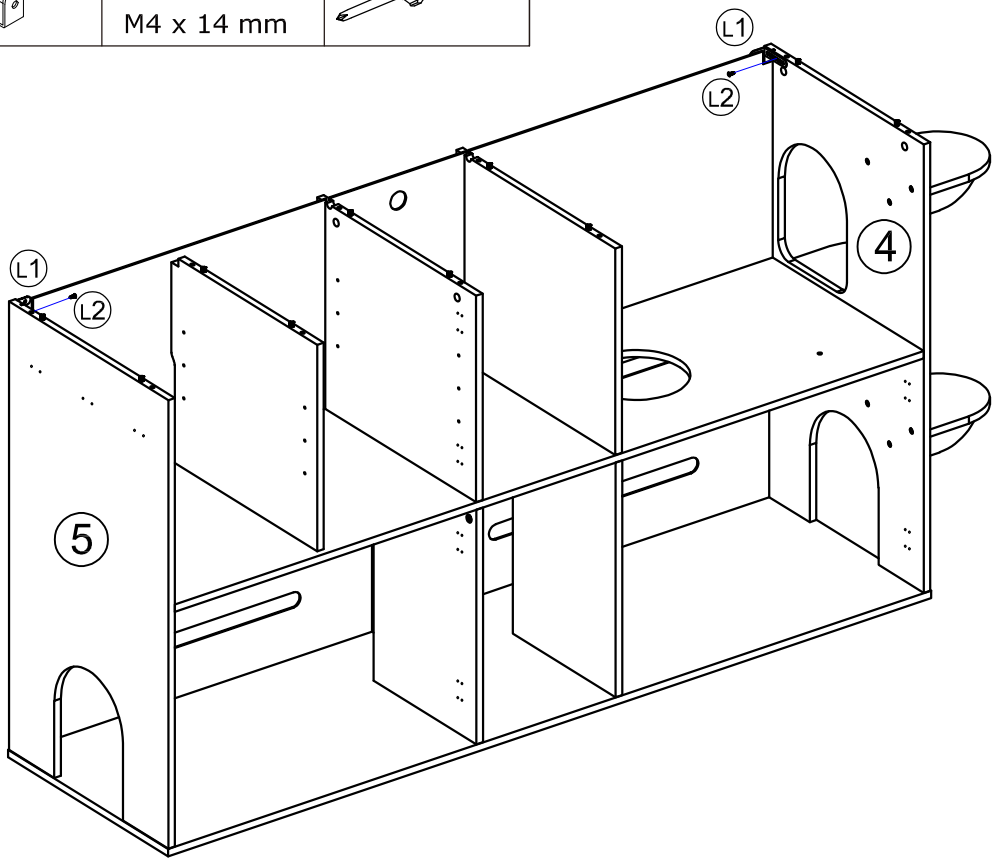

17

Sx1		Q
 L=1600MM	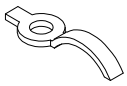  M3 x 12 mm	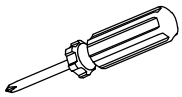

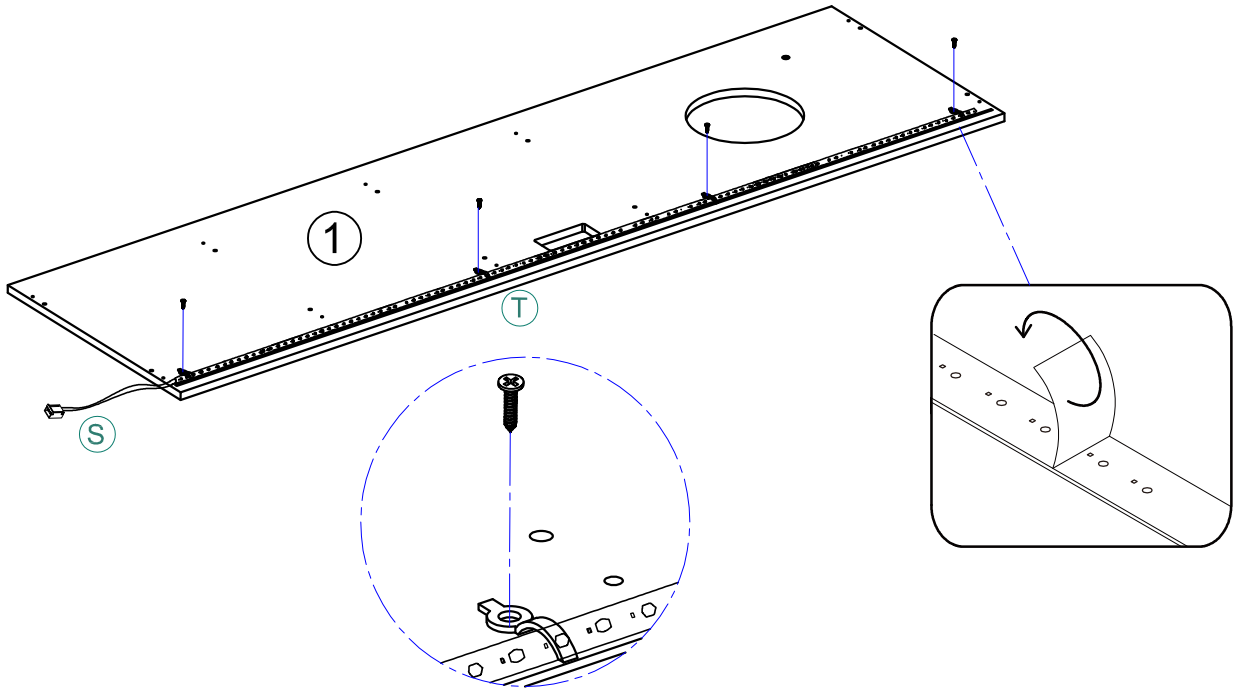

18

A x 10	Z x 1	Q
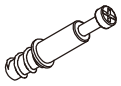 Ø6 x 33 mm		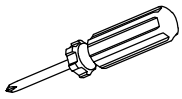

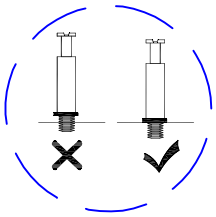

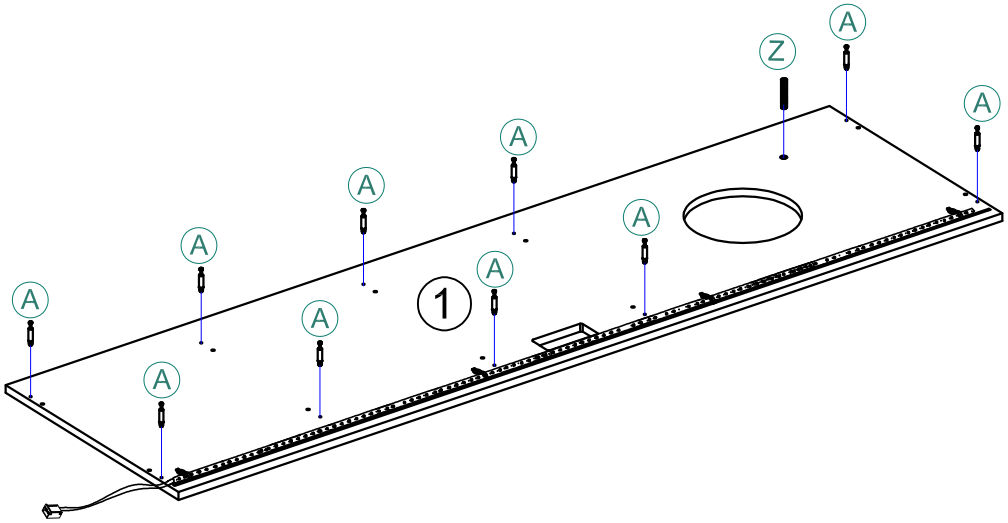

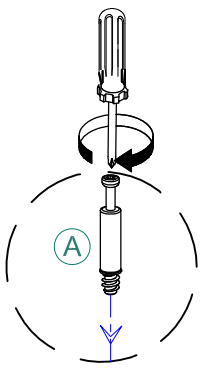

19

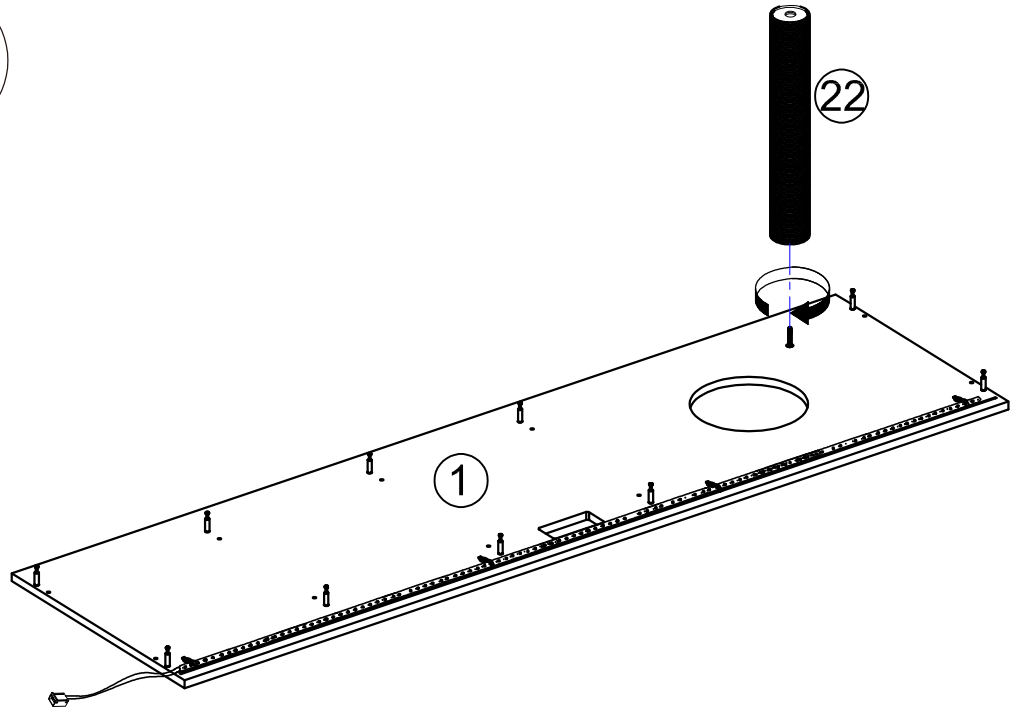

20

B x 10	Yx1	Q
 Ø15 x 9,5 mm	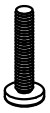	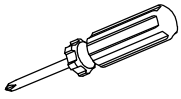

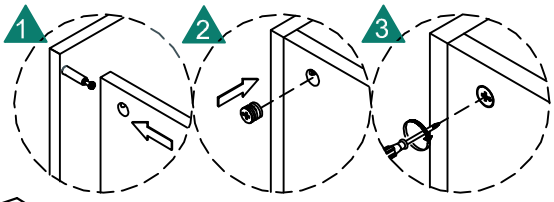

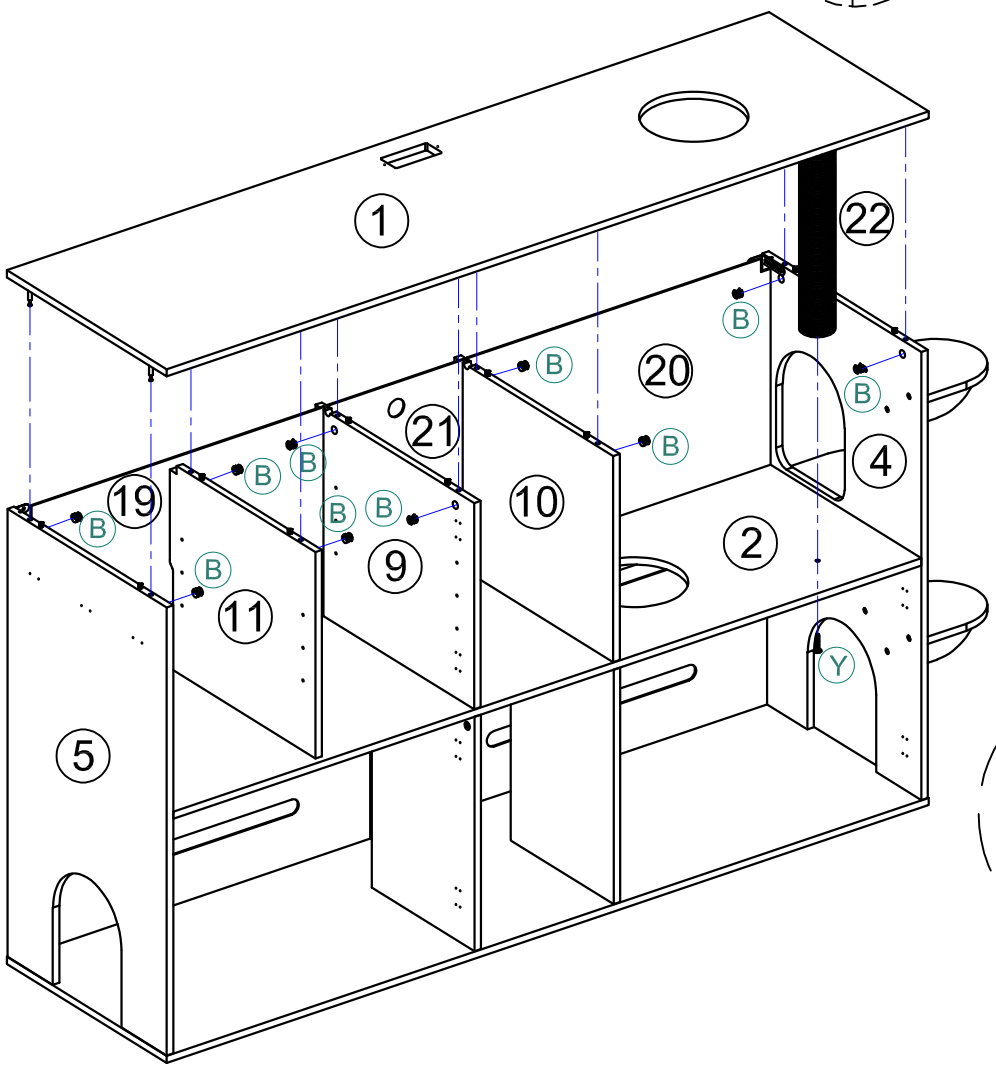

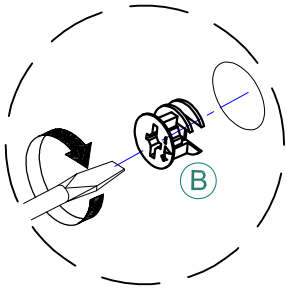

21

Ix28	Jx28	Q
	 M3 x 16 mm	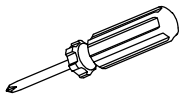

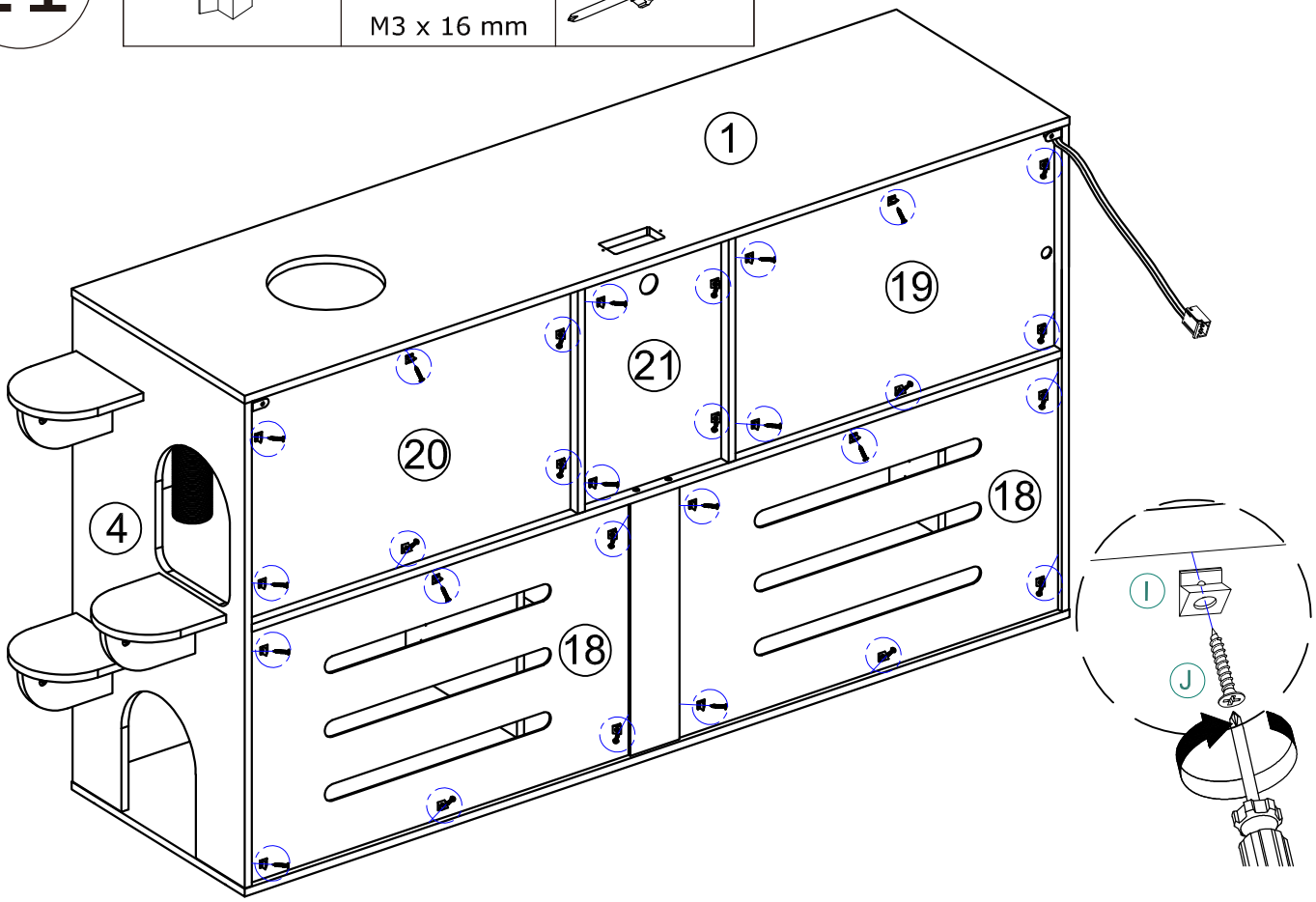

22

Fx2	Ex4	Q
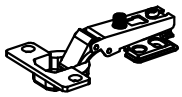	 M3.5 x 14 mm	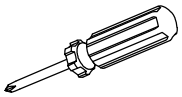

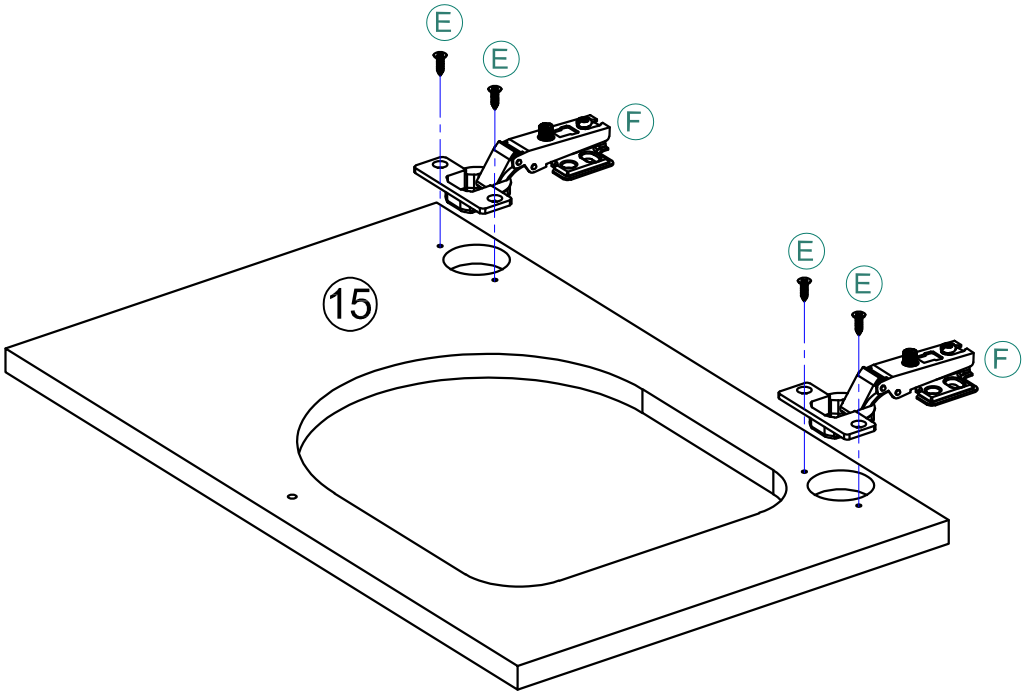

23

Ox1	Nx1	Ex8	Q
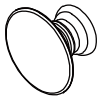	 M4 x 18 mm	 M3.5 x 14 mm	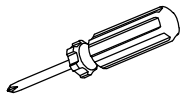

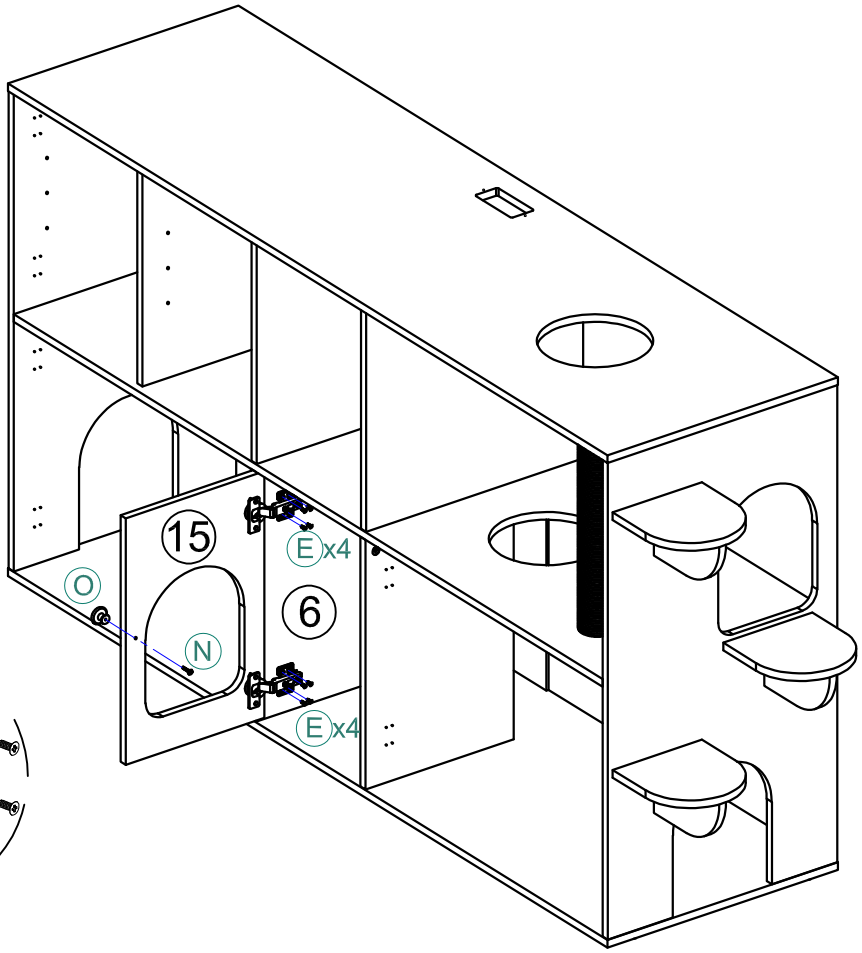

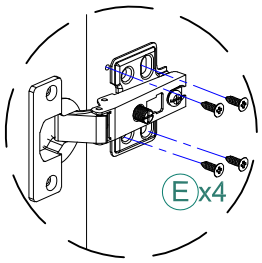

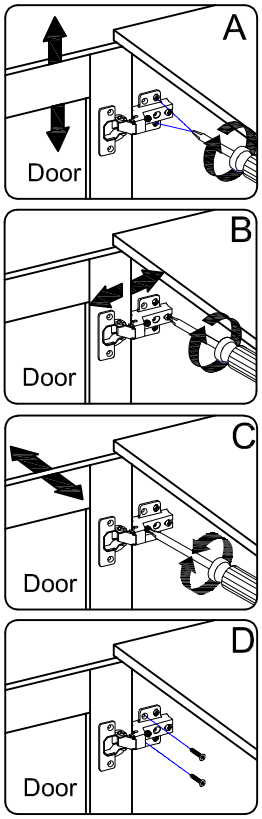

24

Fx8	Ex16	Q
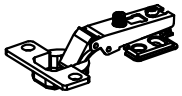	 M3.5 x 14 mm	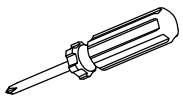

X4

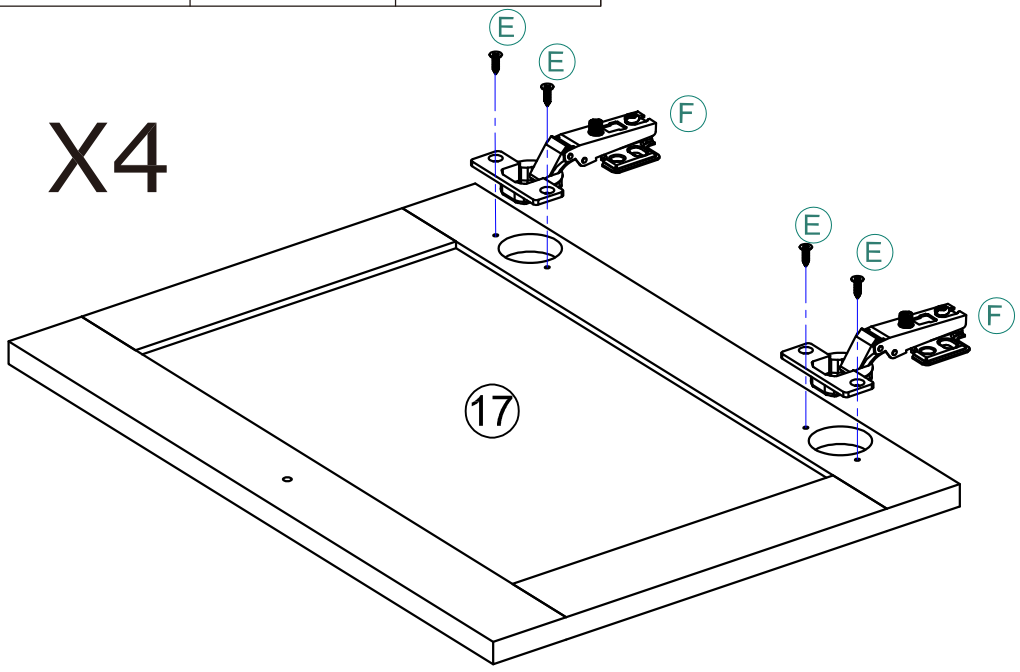

25

Ox4	Nx4	Ex32	Q
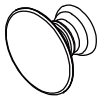	 M4 x 18 mm	 M3.5 x 14 mm	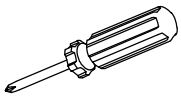

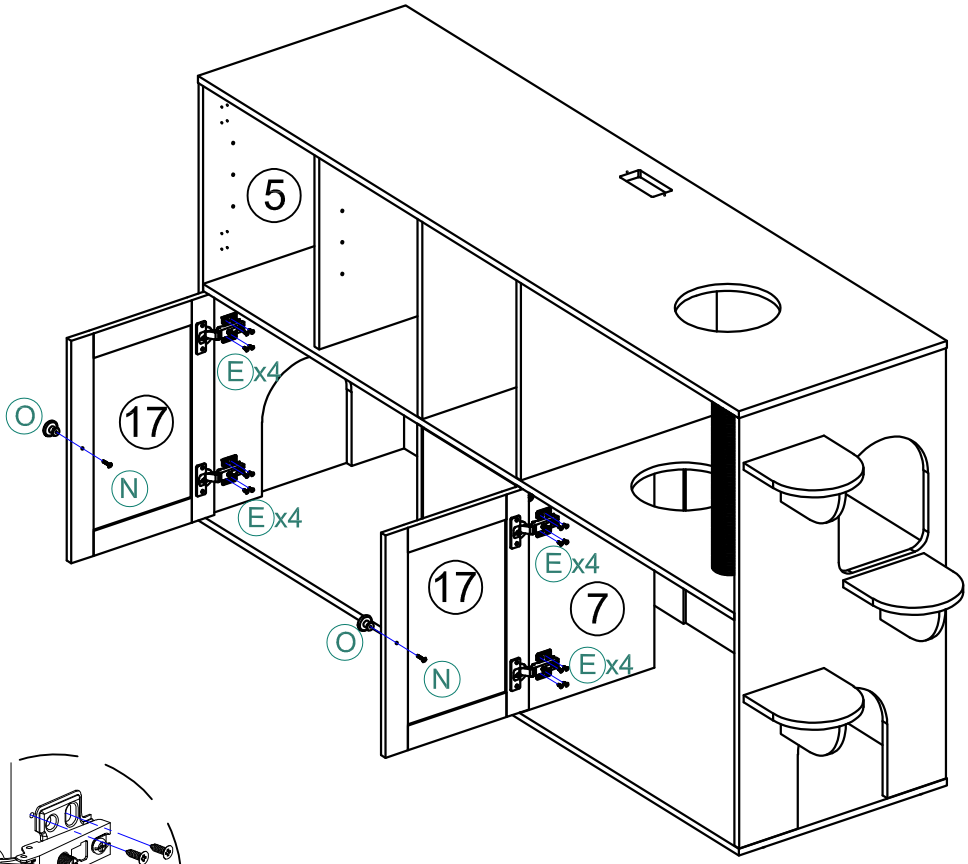

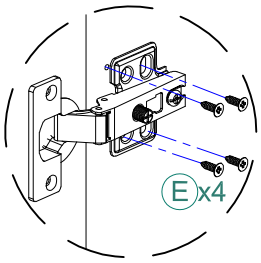

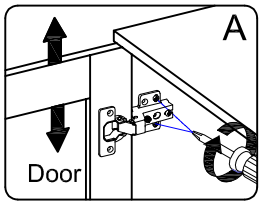

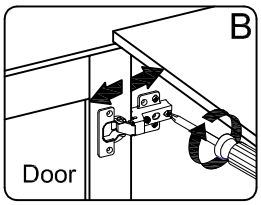

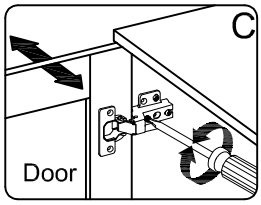

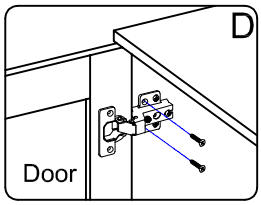

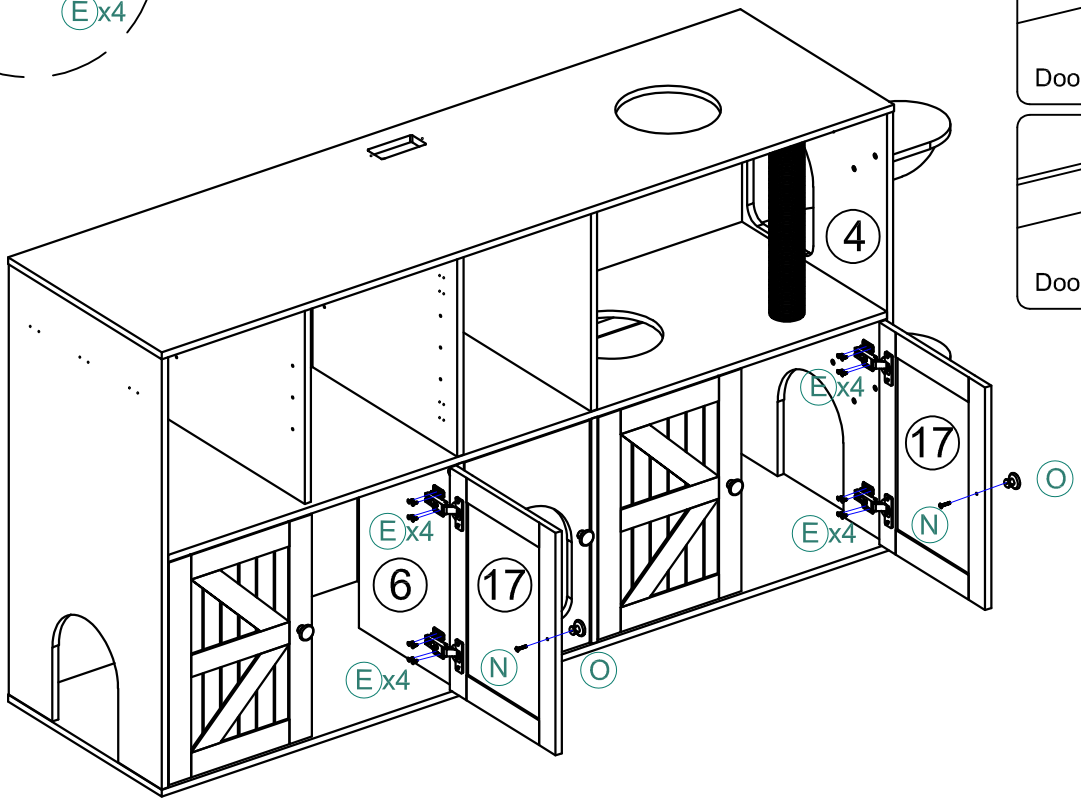

26

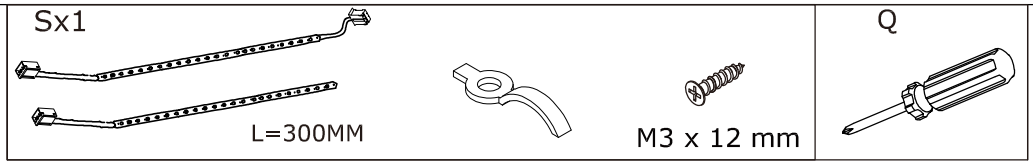

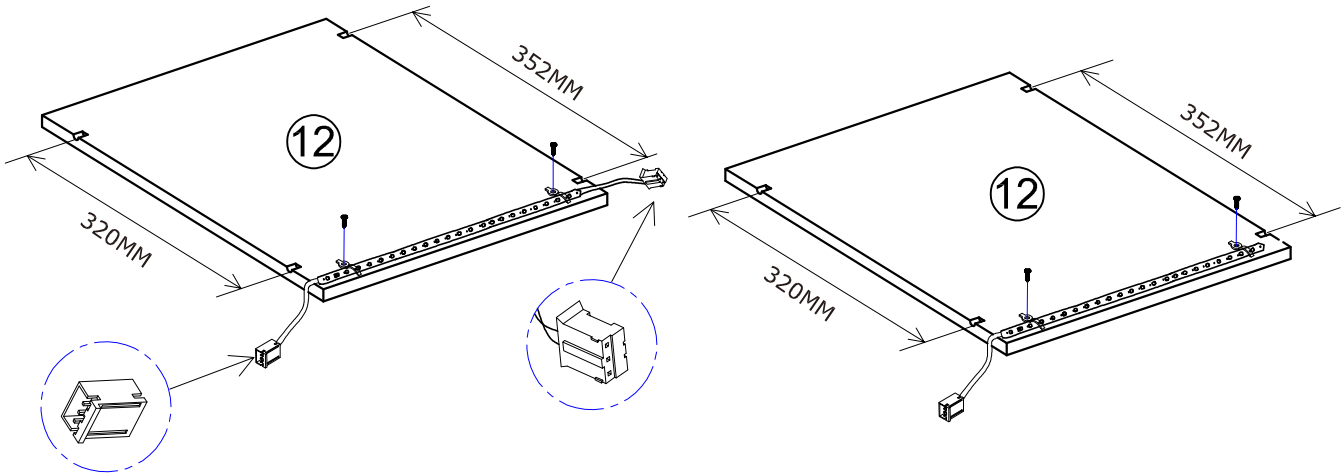

27

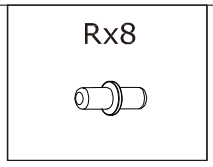

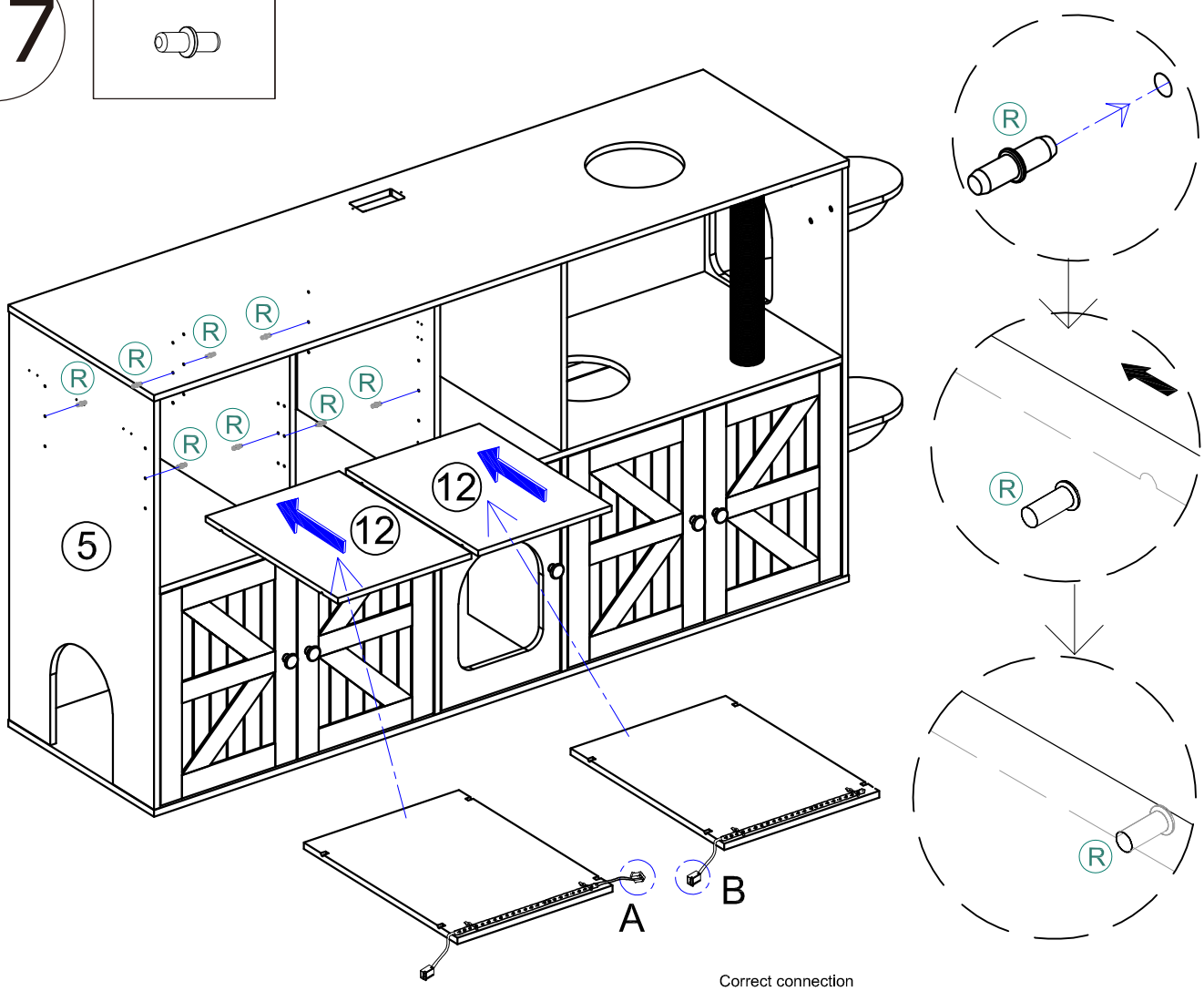

After assembling movable shelf panel No. 18 in the correct position, feed connector A through the gap behind part No. 11 to connect it with connector B (connecting the two LED light wires together)

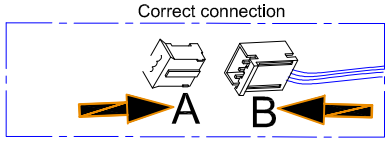

28

Fx4	Ex8	Q
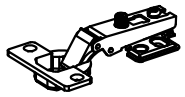	 M3.5 x 14 mm	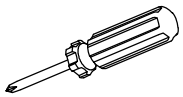

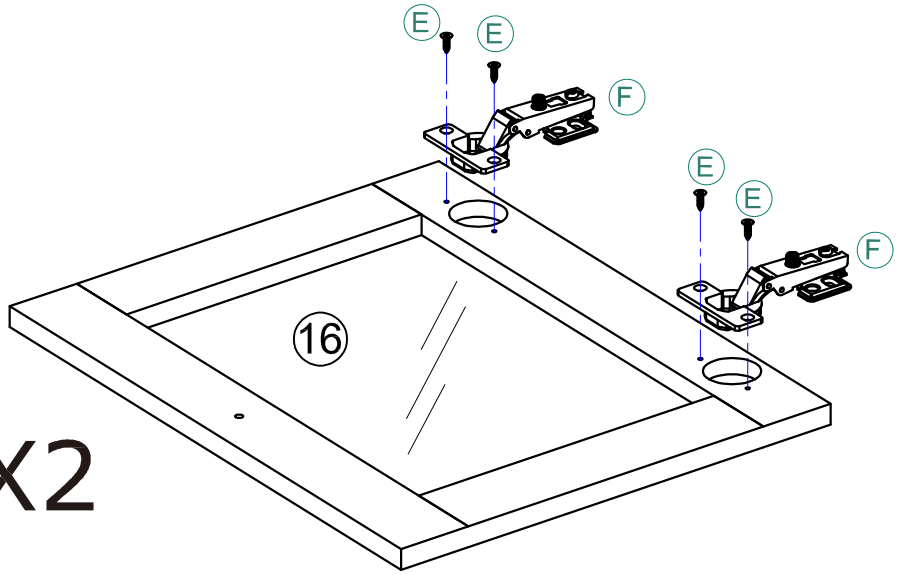

X2

29

Ox1	Nx1	Ex8	Q
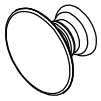	 M4 x 18 mm	 M3.5 x 14 mm	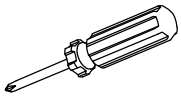

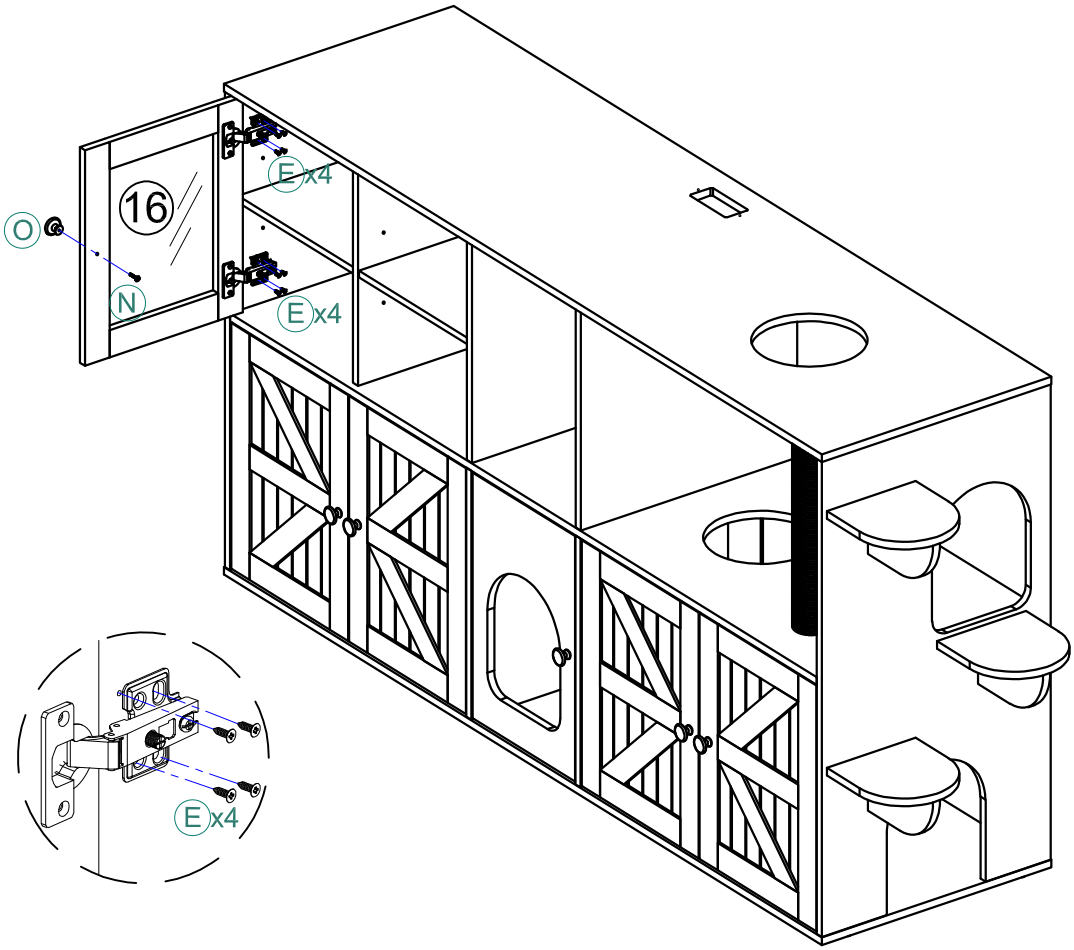

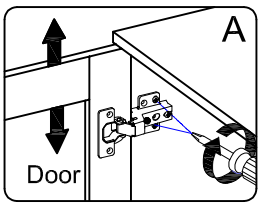

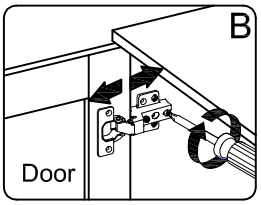

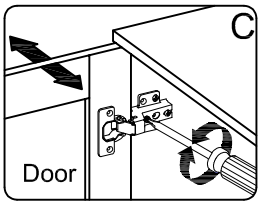

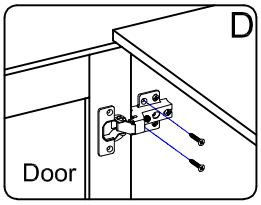

30

Ox1	Nx1	Ex8	Q
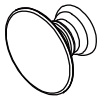	 M8 x 18 mm	 M3.5 x 14 mm	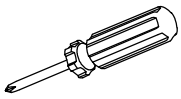

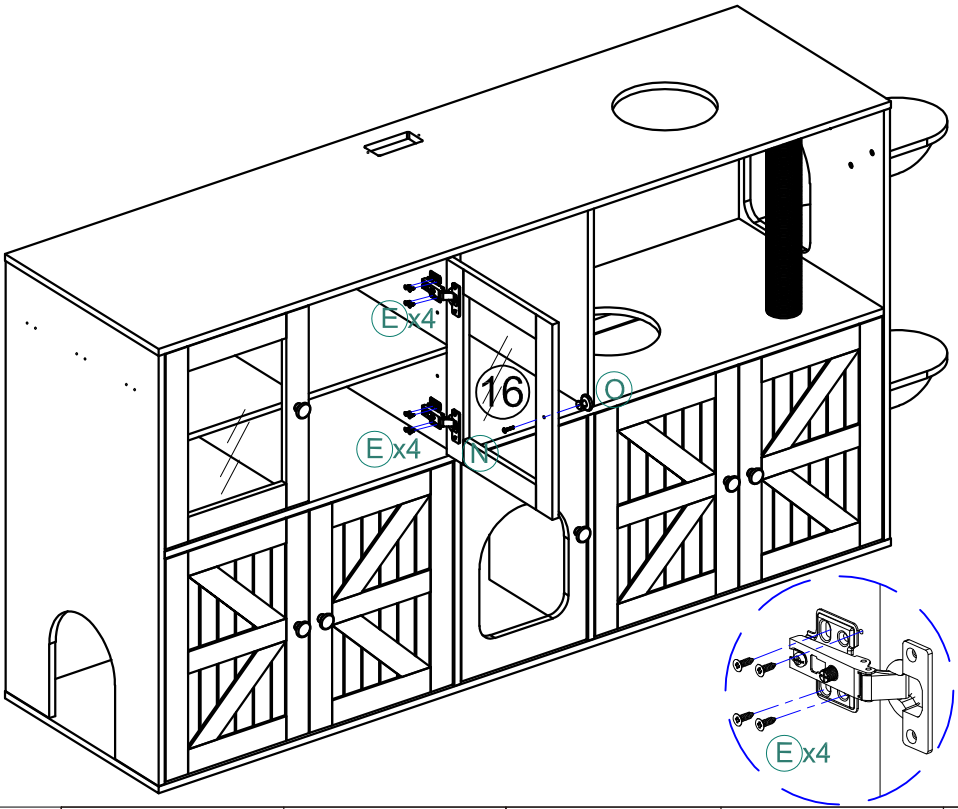

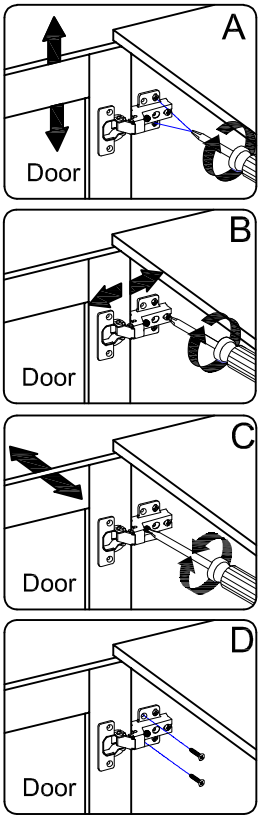

31

Hx3	Gx6	Xx1	Ex2	Q
	 M3 x 14 mm	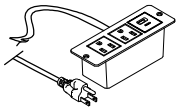	 M3.5 x 14 mm	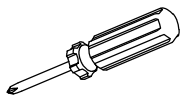

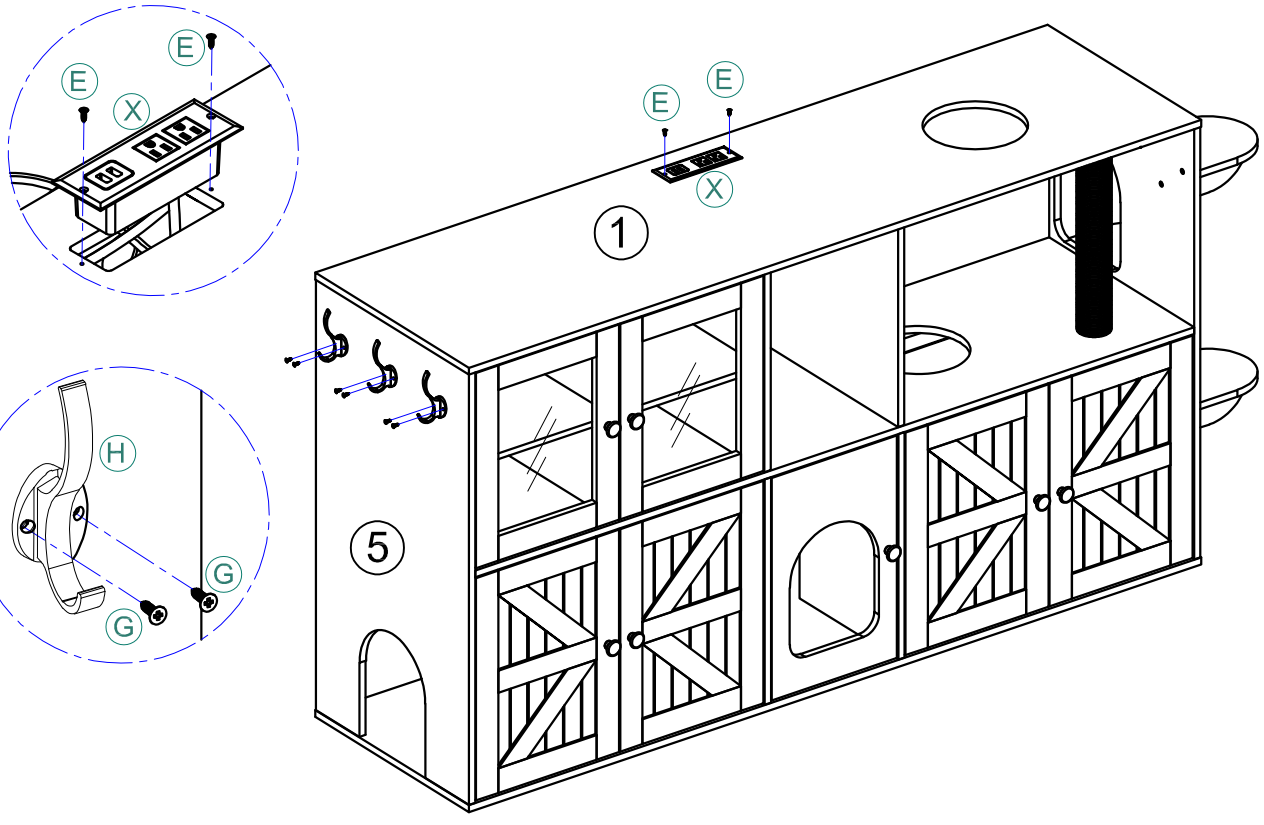

32

Sx1

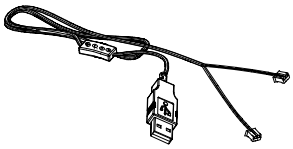

NOTE: The connectors of the LED light strip and the power plug are fed through the corresponding holes at the back of the back panel !

Correct connection

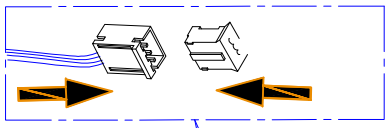

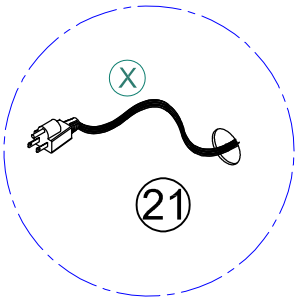

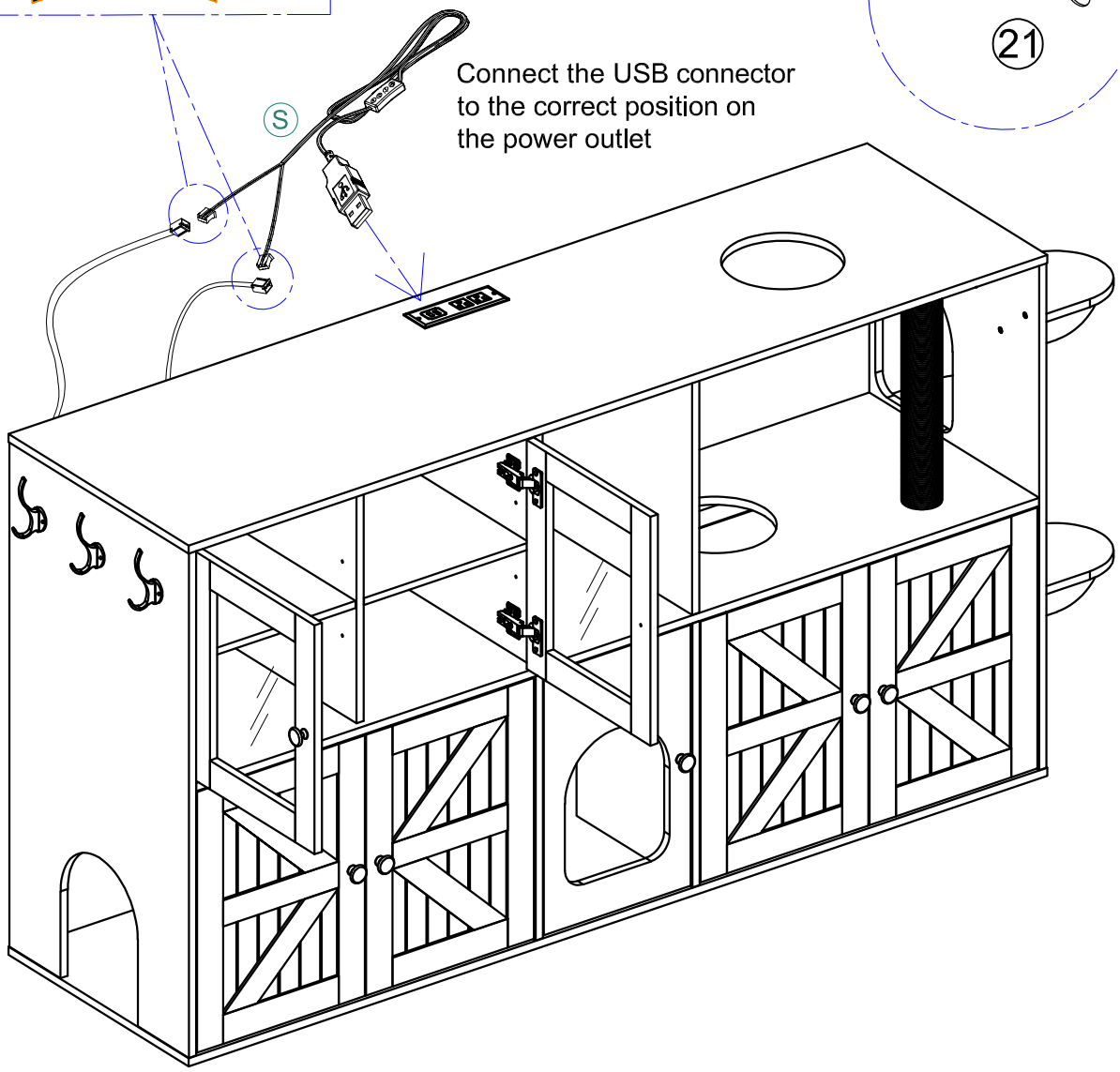

Connect the USB connector to the correct position on the power outlet

33

L3x2	L4x2	Q	Mx23
	M4 x 35 mm		

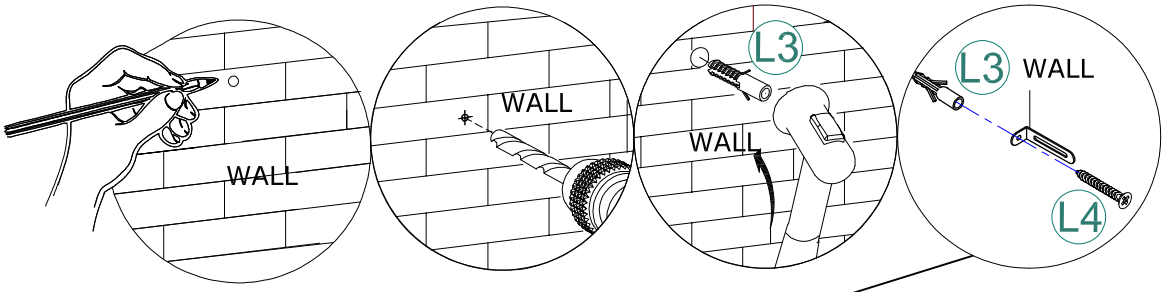

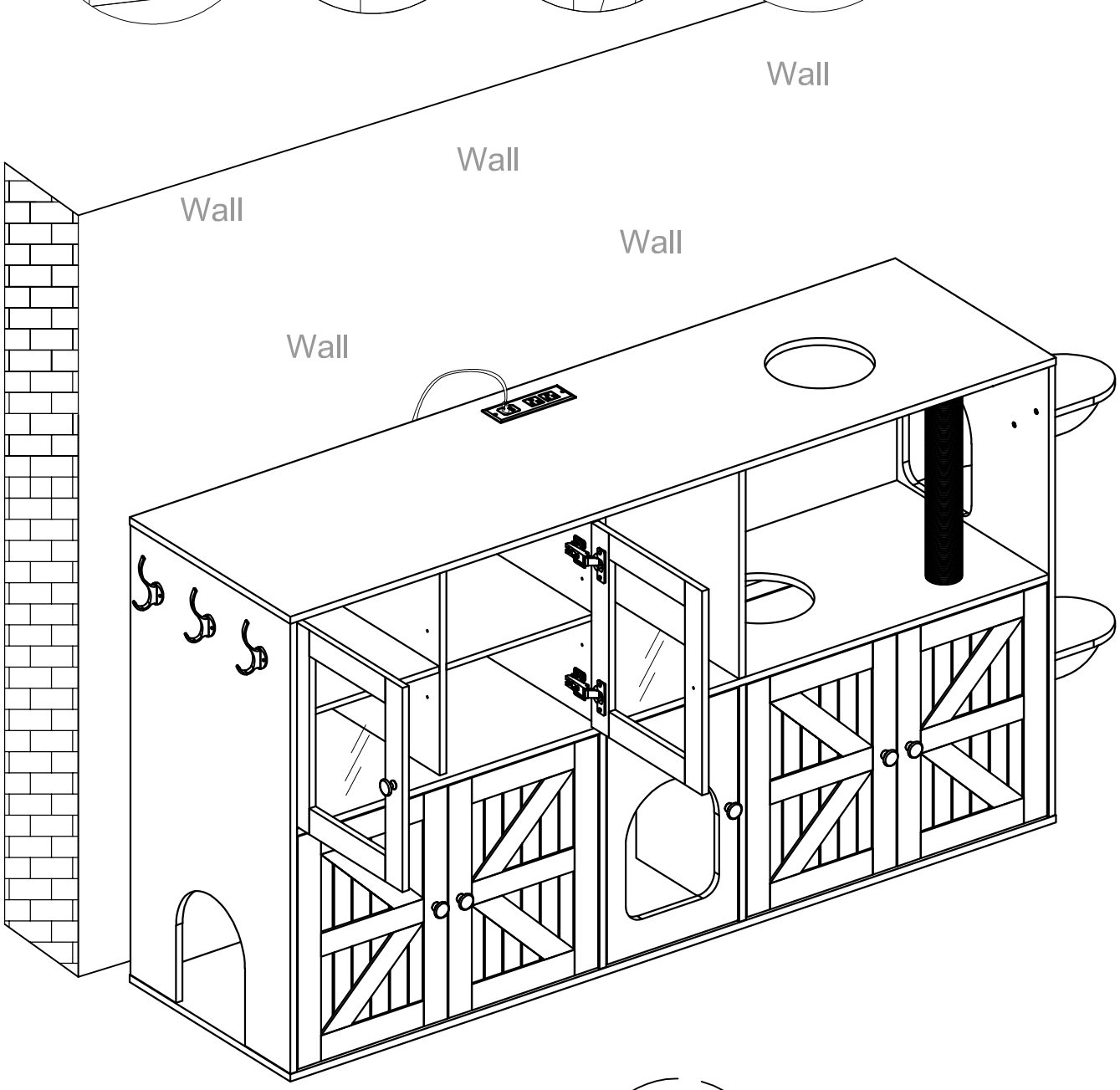

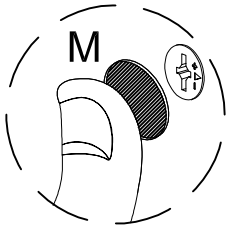

Use Perfect Sticker (M) to cover the Camlock's holes on the All side you can see!

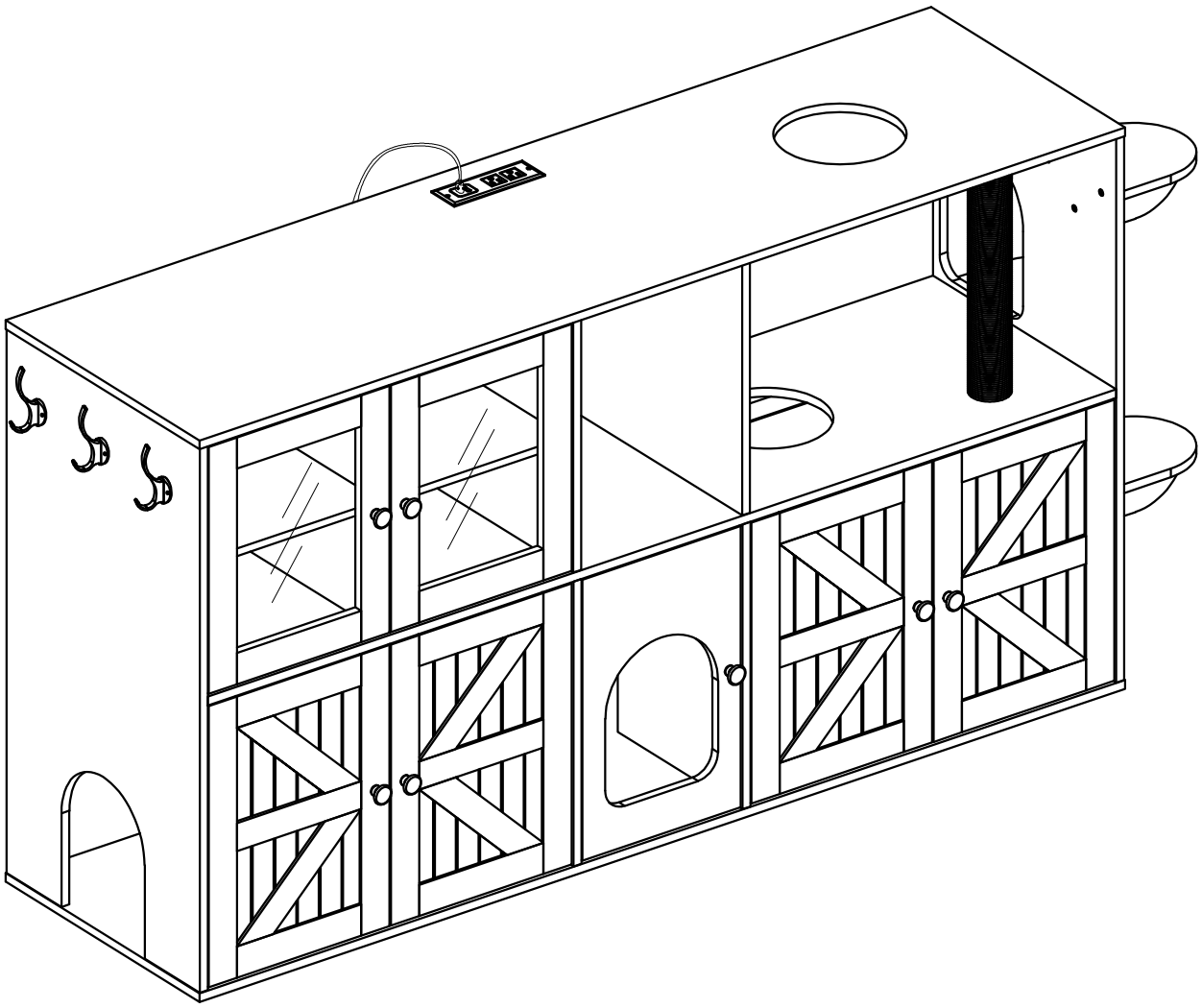

FINISH

Made in VIETNAM