A1303-2PLR-T
A1303-2PSR-T

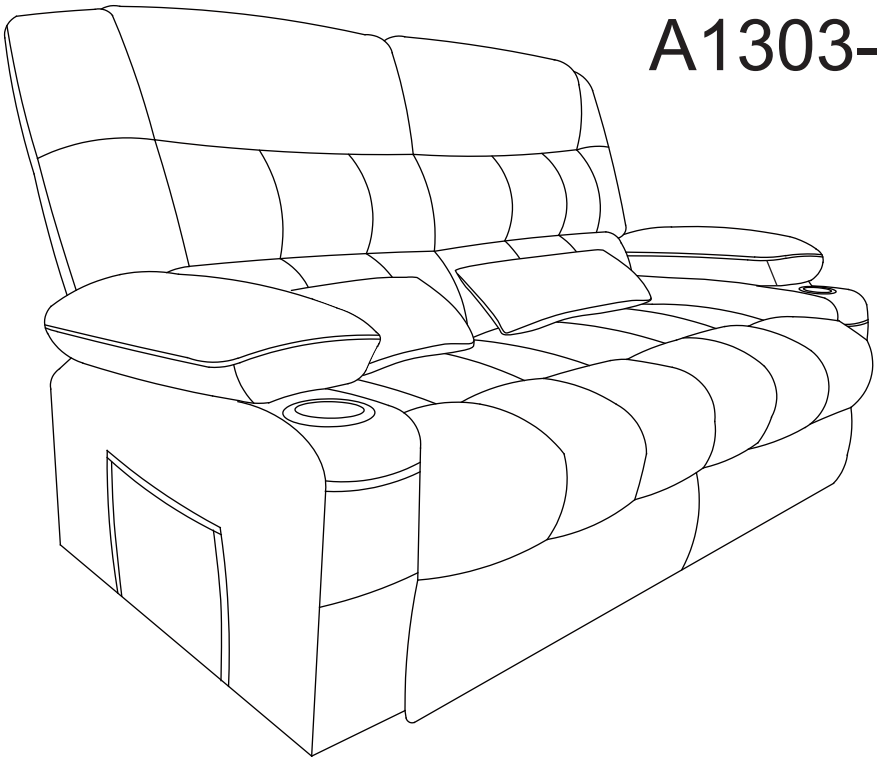

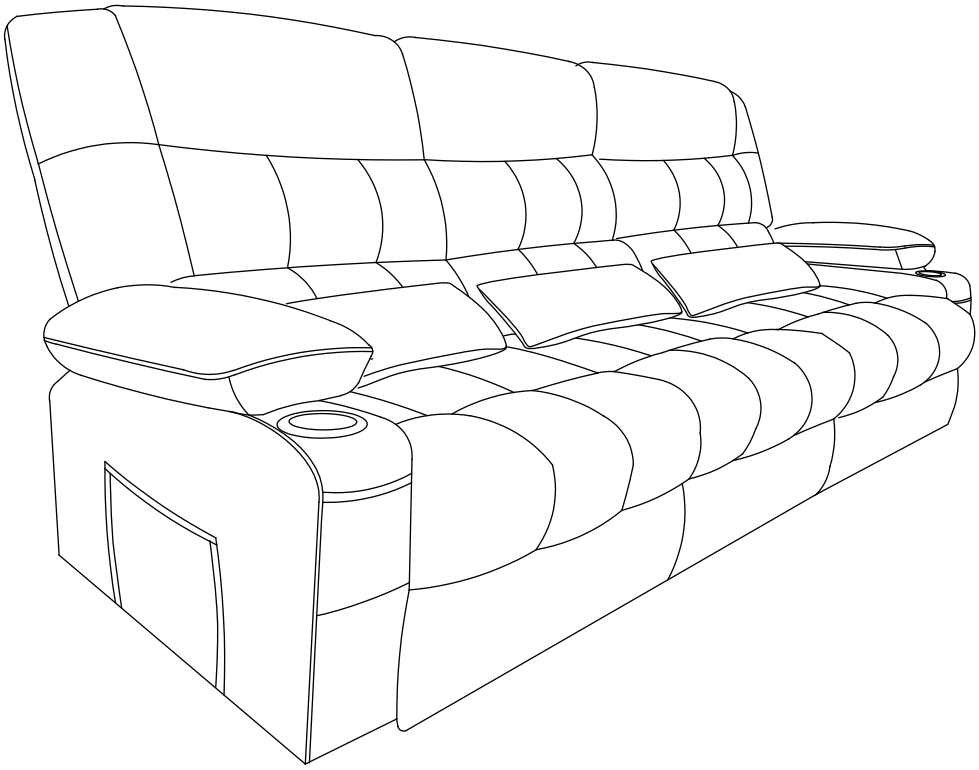

INSTRUCTION MANUAL

MODEL:A1303-U-T

ASSEMBLY GUIDE

Congratulations, you now have a new function sofa with massage.

Before enjoy the comfort chair, you have to put it together.This Assembly Guide will take you through the basic assembly process. To make sure your assembly goes smoothly, please follow the assembly instructions, **and especially the important safety information.**

Also, while it is possible to assemble the chair on your own, **having a second person to help you makes it even easier.**

Before you begin, please check if there are any missing parts from the package. Should there be any issues, please don't hesitate to drop us an email and we'll help you out ASAP.

PACKAGE LIST

A1 Seat frame

L

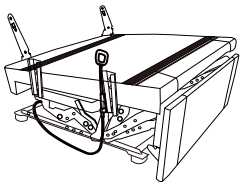

B1 Seat frame

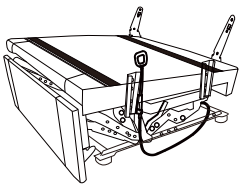

R

C1 Seat frame

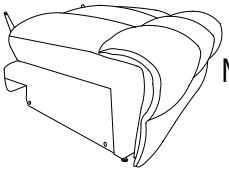

Middle

A2 Back

L

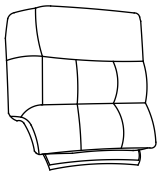

B2 Back

R

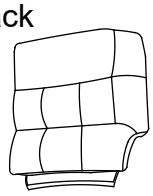

C2 Back

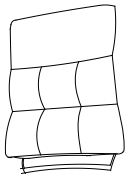

Middle

T Back frame

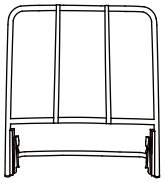

D Arm frame

D(L) D(R)



E Arm frame

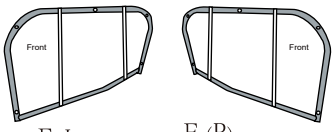

E (L) E (R)

F Armrest cover



F(L) F(R)

P Cup holder



×2

M Connecting tubes



10pcs

N Long screw



10pcs

O Spanner

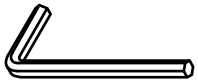

W Pillow

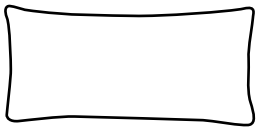

×3

spare



2pcs

A3 Seat cushion

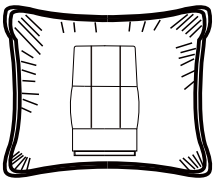

×2

N2 Nut

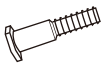

×2

Z Gasket



×2

ASSEMBLY INSTRUCTION

STEP 1:Flip the seat frame over with the footrest facing upwards,Pull the footrest with your hand，Then remove the compressed seat cushions and the accessory boxes and armrest cover and pillows from the frame.（The accessory box is inside Box A.）

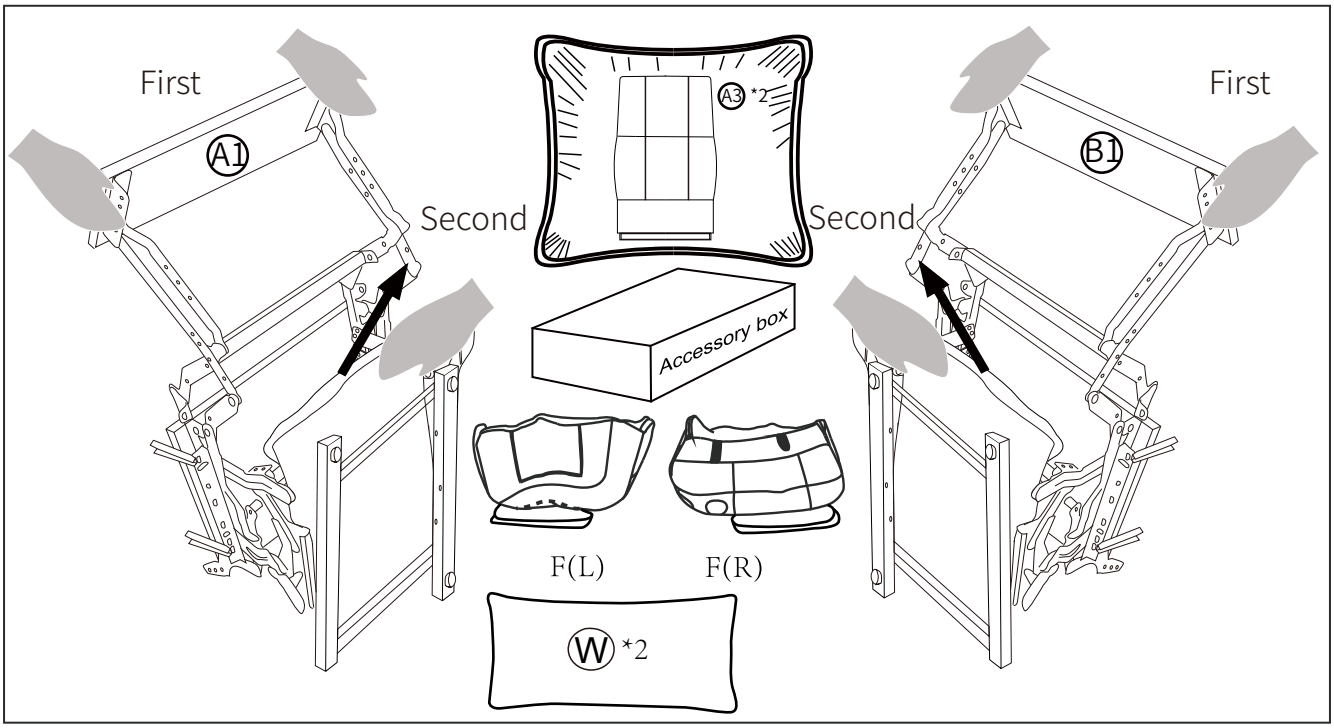

STEP 2:Use spanner O and screw N to pin through the inner iron frame D and the armrest pillar M to the outer frame E of the armrest. Tight all screws, please pay attention to distinguish the front and back of the armrest frame.

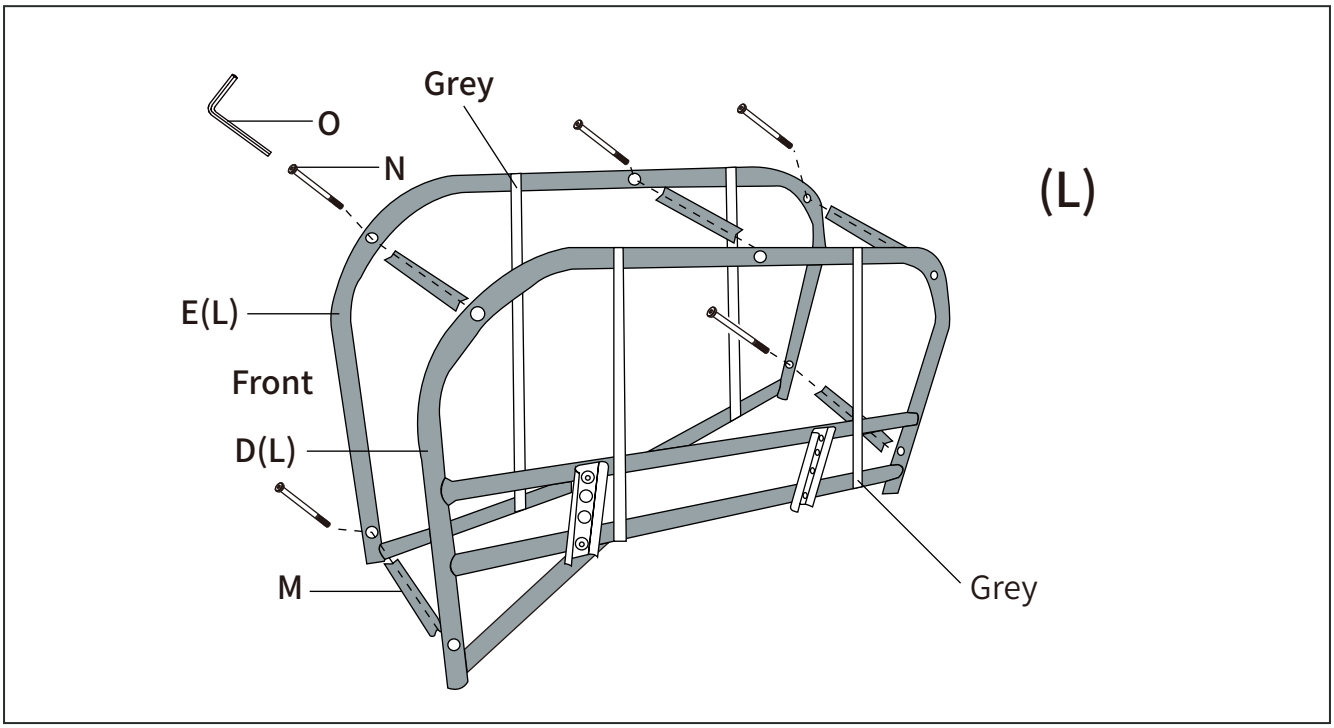

ASSEMBLY INSTRUCTION

STEP 3:Align the armrest cover to armrest-assembled iron frame in sequence of left and right, back and forward. so that the cloth cover hole is aligned with the insert hole. Pull the zipper after all is OK.

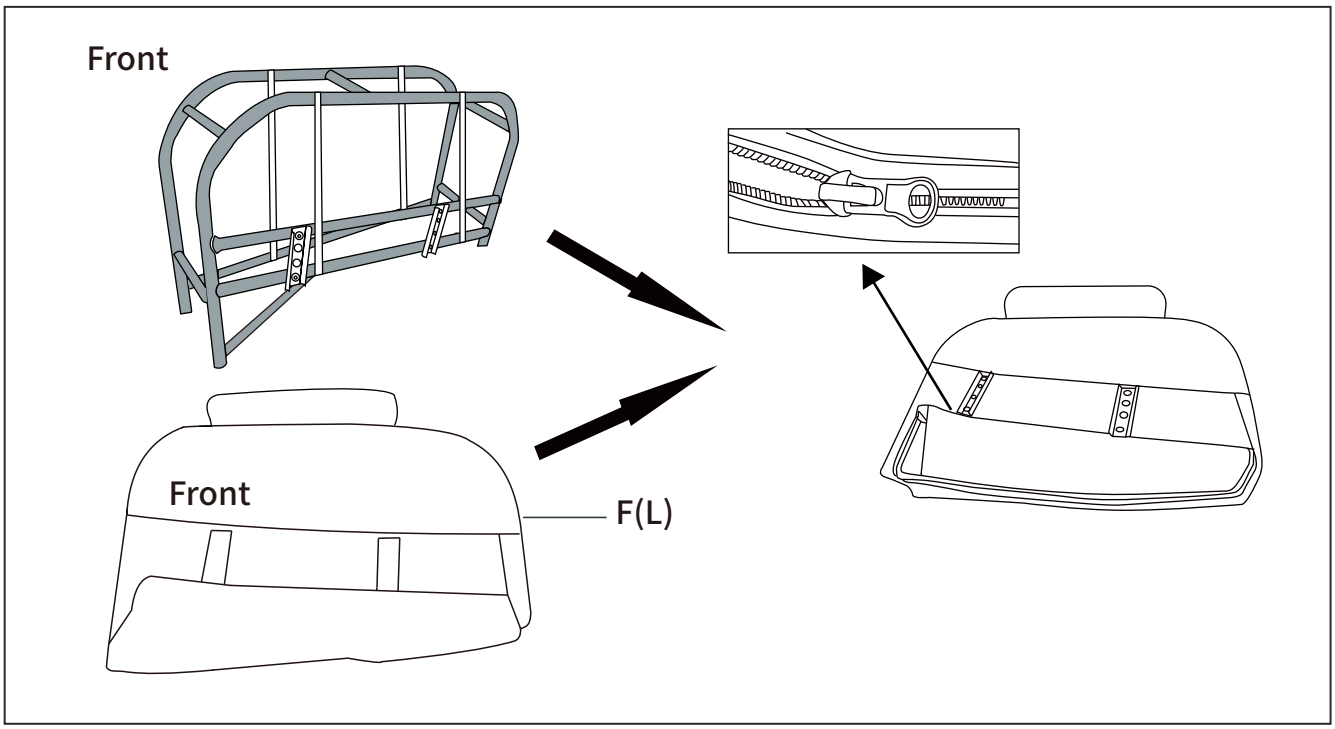

STEP 4:Repeat Step 2.

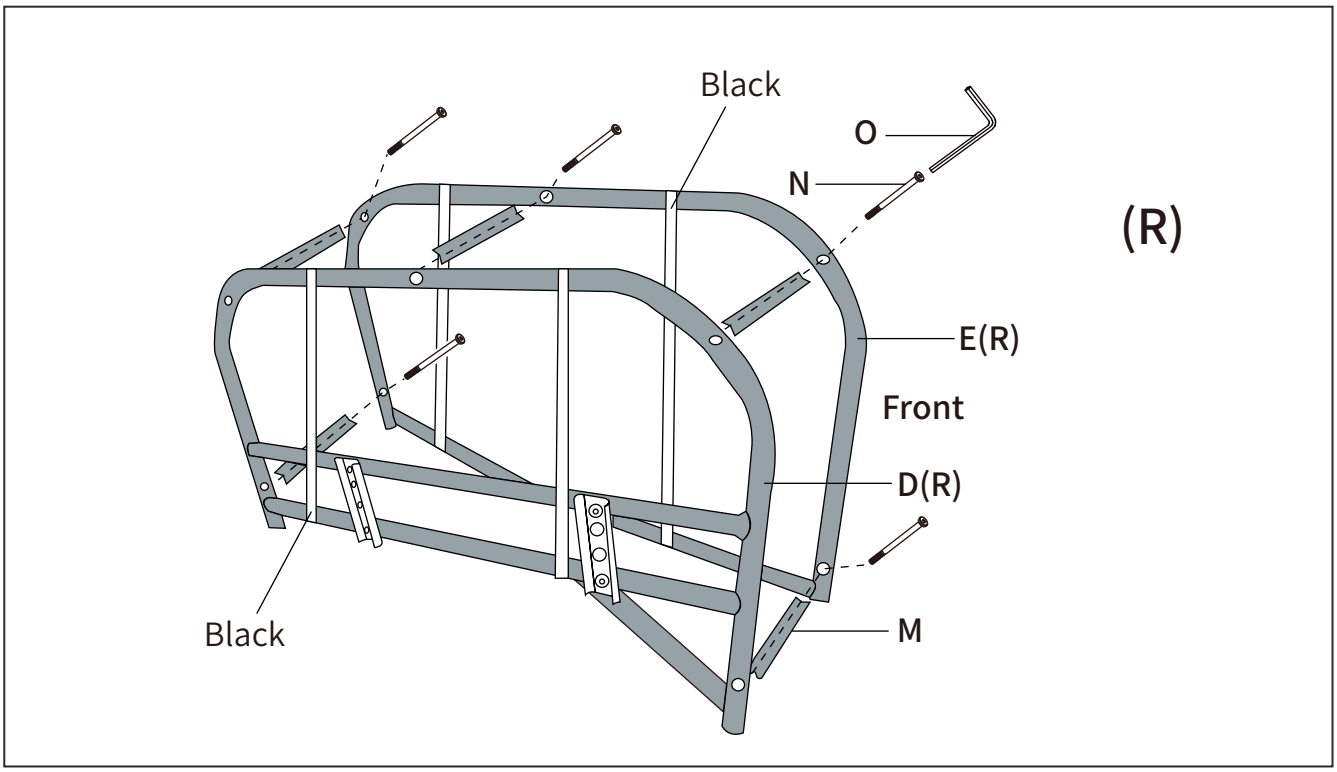

ASSEMBLY INSTRUCTION

STEP 5:Repeat Step 3.

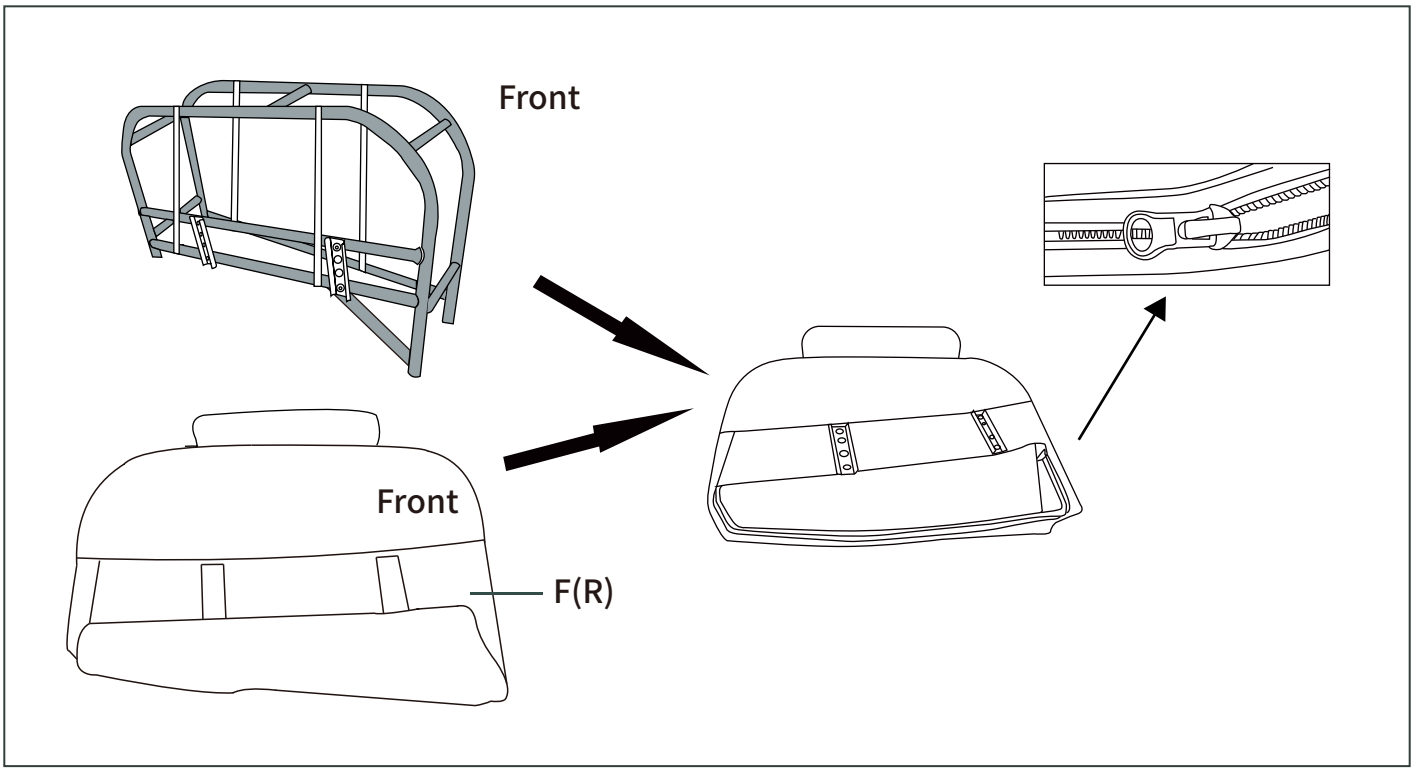

STEP 6:Place the cup holder into the groove.

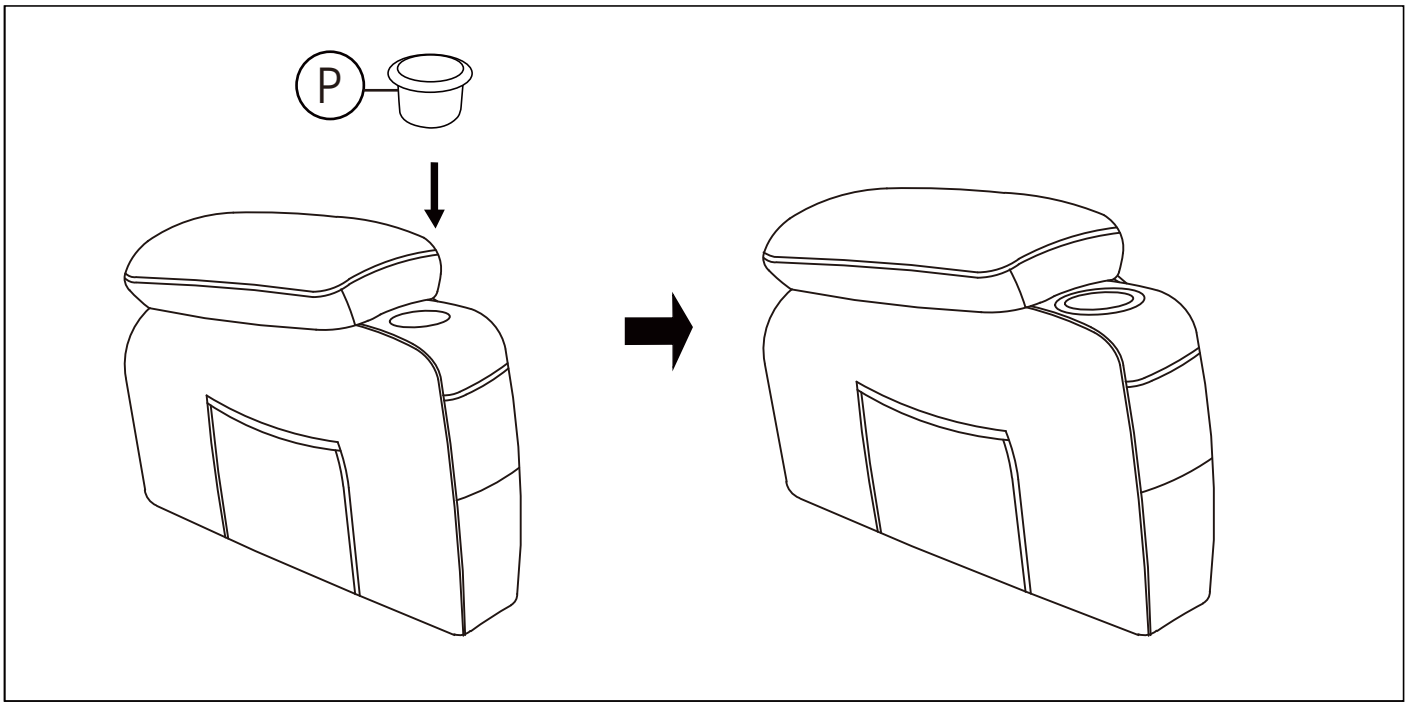

ASSEMBLY INSTRUCTION

STEP 7:Insert arms so that they can fit into the seat,you will hear a“click” when they are engaged.（Note that the handle of the pull tab should be left exposed)

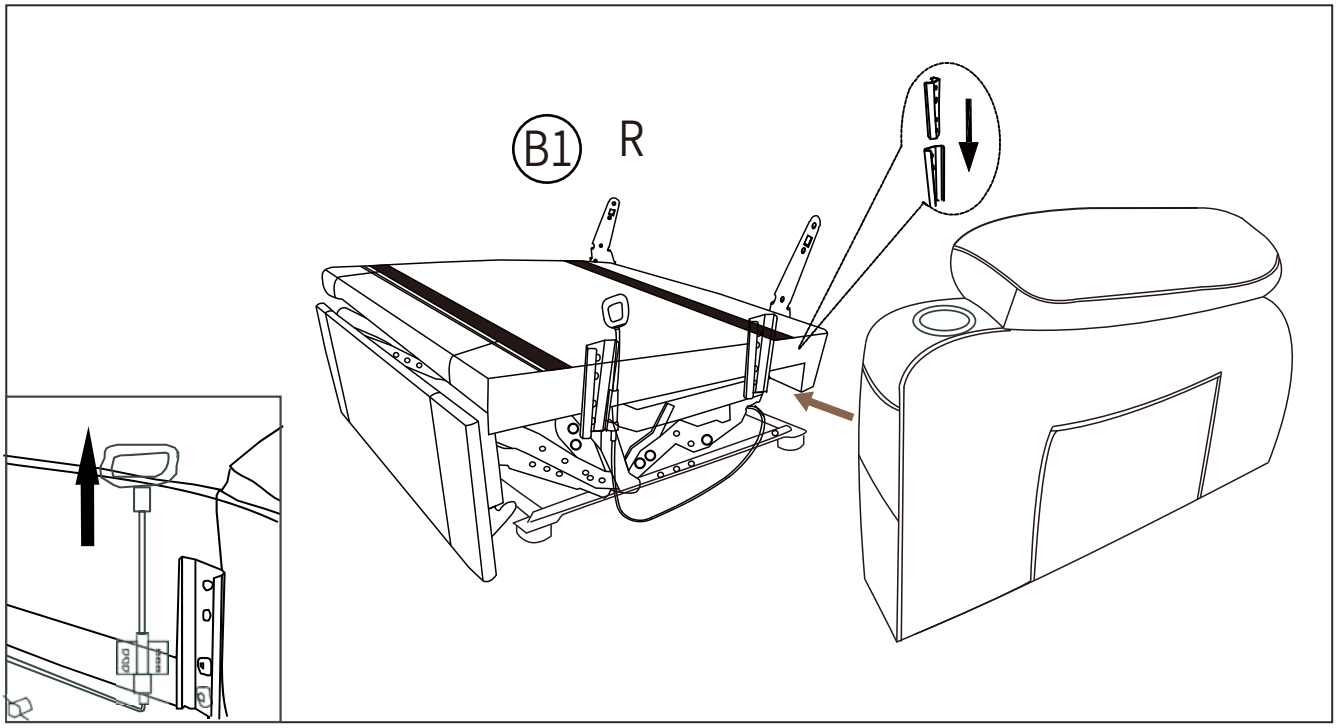

STEP 8:Repeat Step 7.

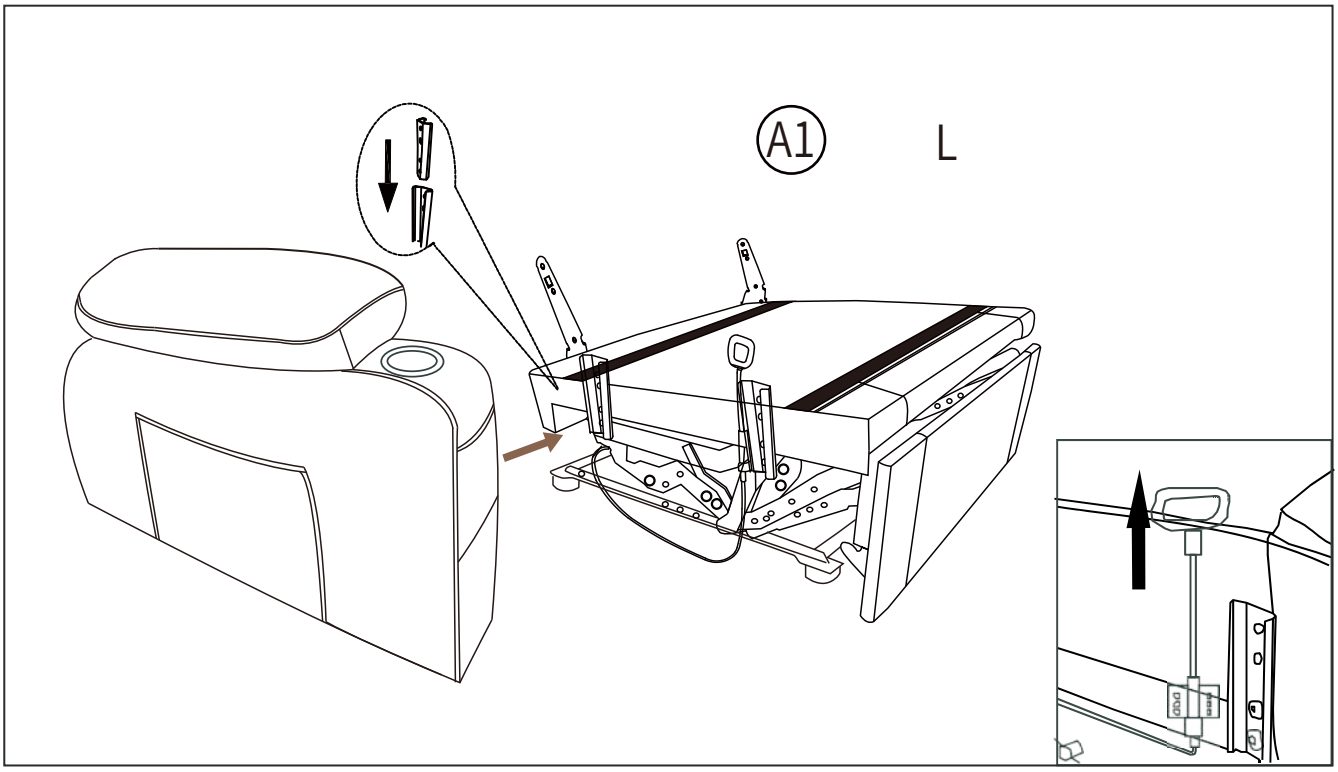

ASSEMBLY INSTRUCTION

STEP 9:Open the compression bag and remove the seat cushion.

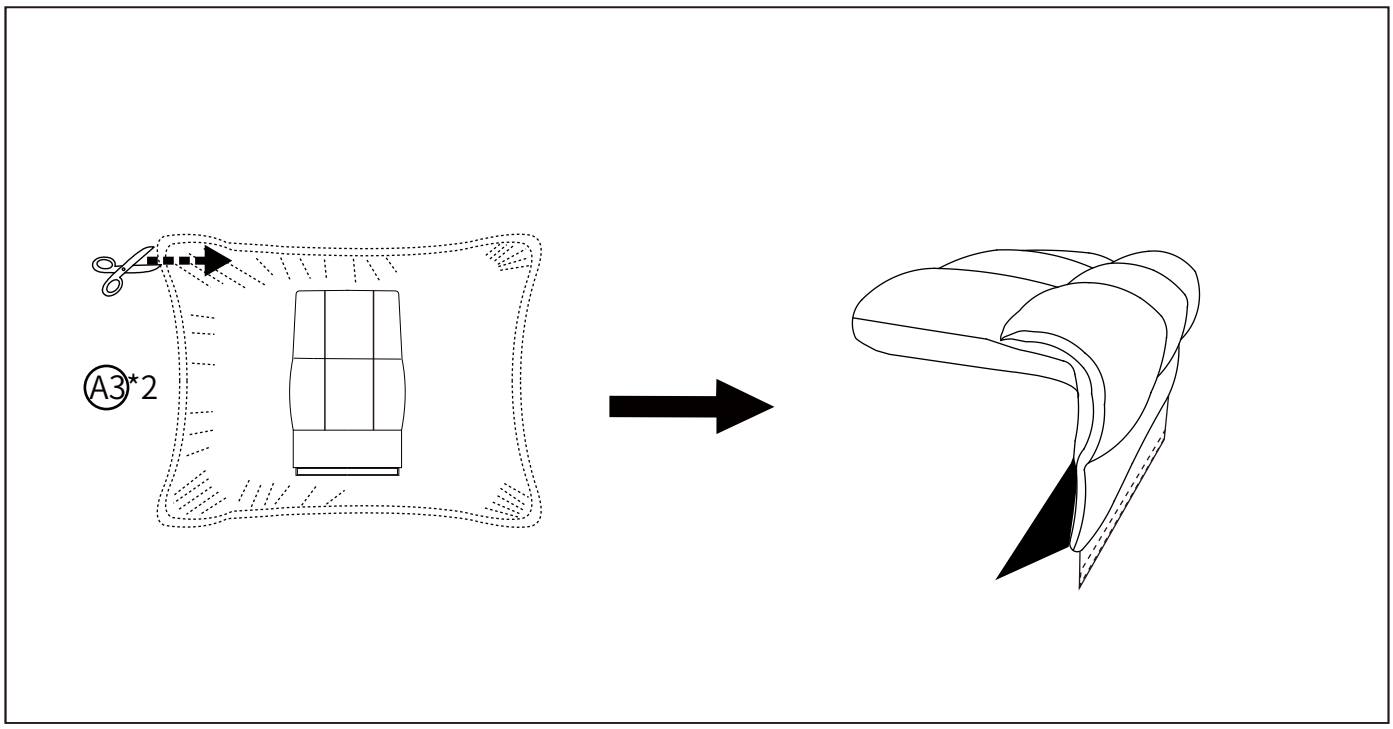

STEP 10:Pull the ring to open the rack.The velcro on the rack sticks to the bottom of the saddle, and the cool cloth at the back of the saddle goes through the frame pedal and sticks to velcro at the front of the saddle.(Note: The cushion can be adjusted repeatedly to avoid improper pasting affecting the sitting feeling and the use of the pull ring)

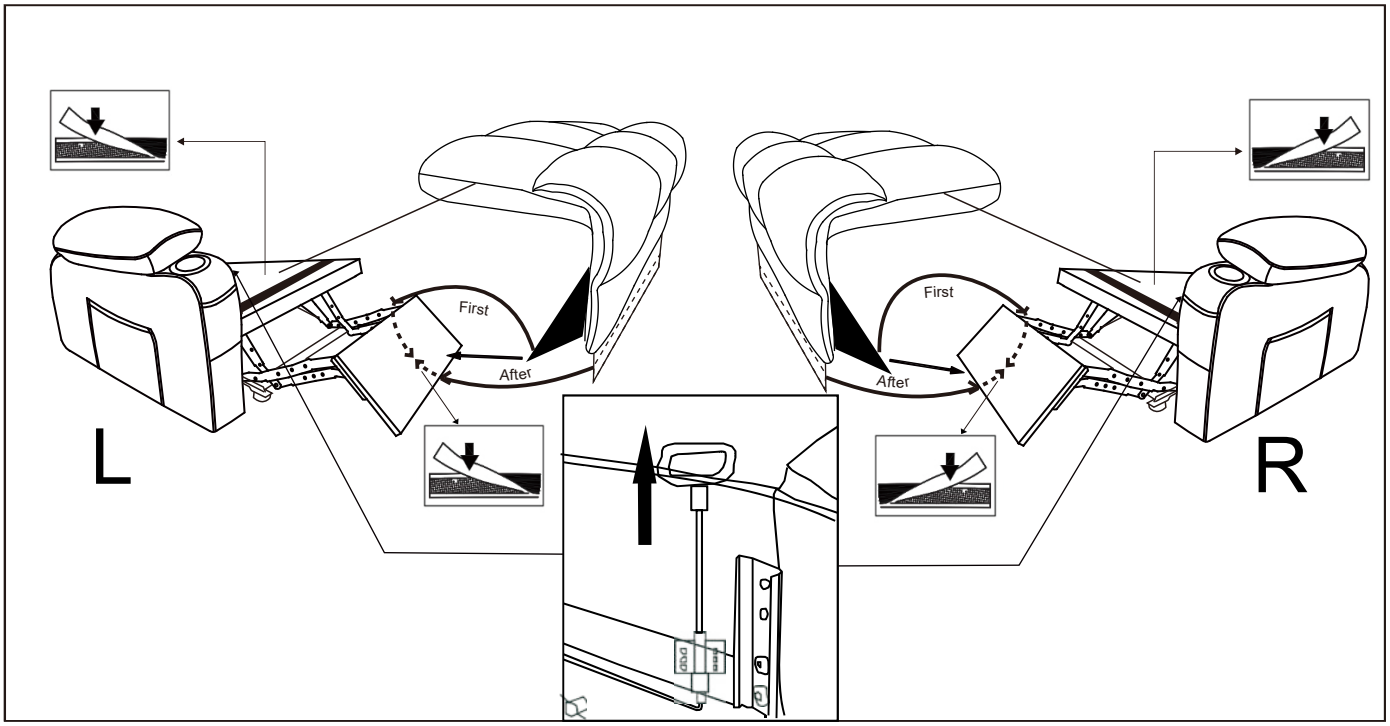

ASSEMBLY INSTRUCTION

STEP 11 :Remove the middle back and pillow and hardware bag from under the middle seat.
（Installation method for the middle seat in a three-seater configuration. For the two-seater configuration, this is ignored.）

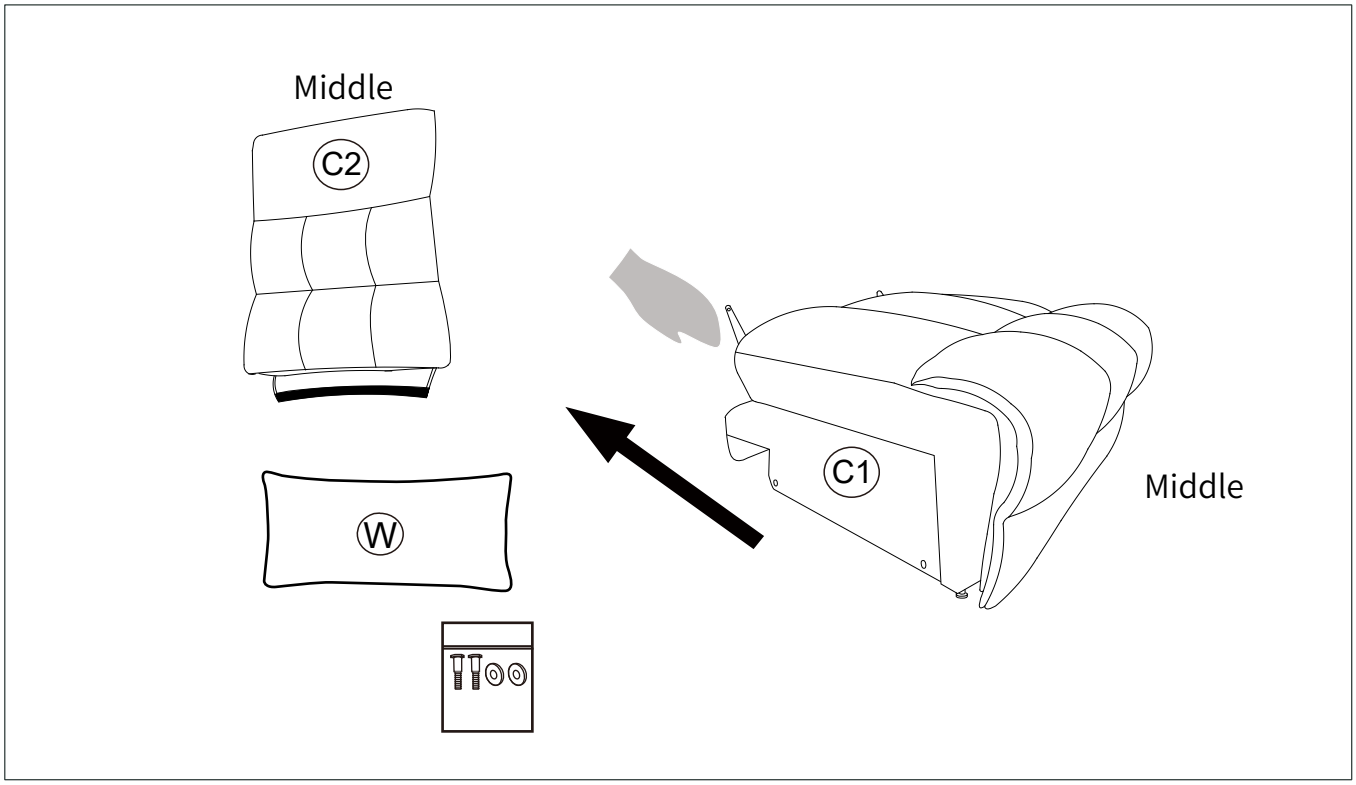

STEP 12 :Pass the hexagon socket nut through the gasket and rotate it to lock the side holes of the center seat frame.（Installation method for the middle seat in a three-seater configuration. For the two-seater configuration, this is ignored.）

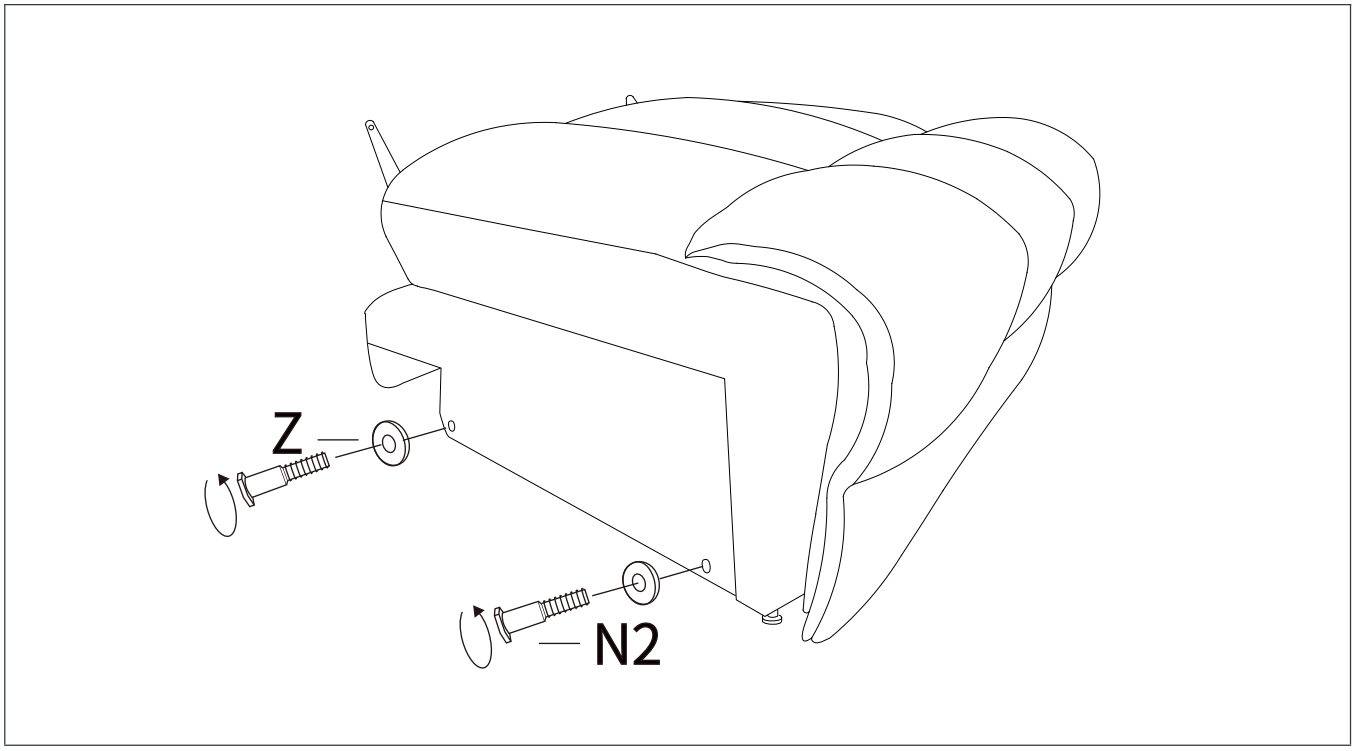

ASSEMBLY INSTRUCTION

STEP 13 :Zip the backpack and back frame, and then connect the backpack and back frame with velcro.（Installation method for the middle seat in a three-seater configuration. For the two-seater configuration, this is ignored.）

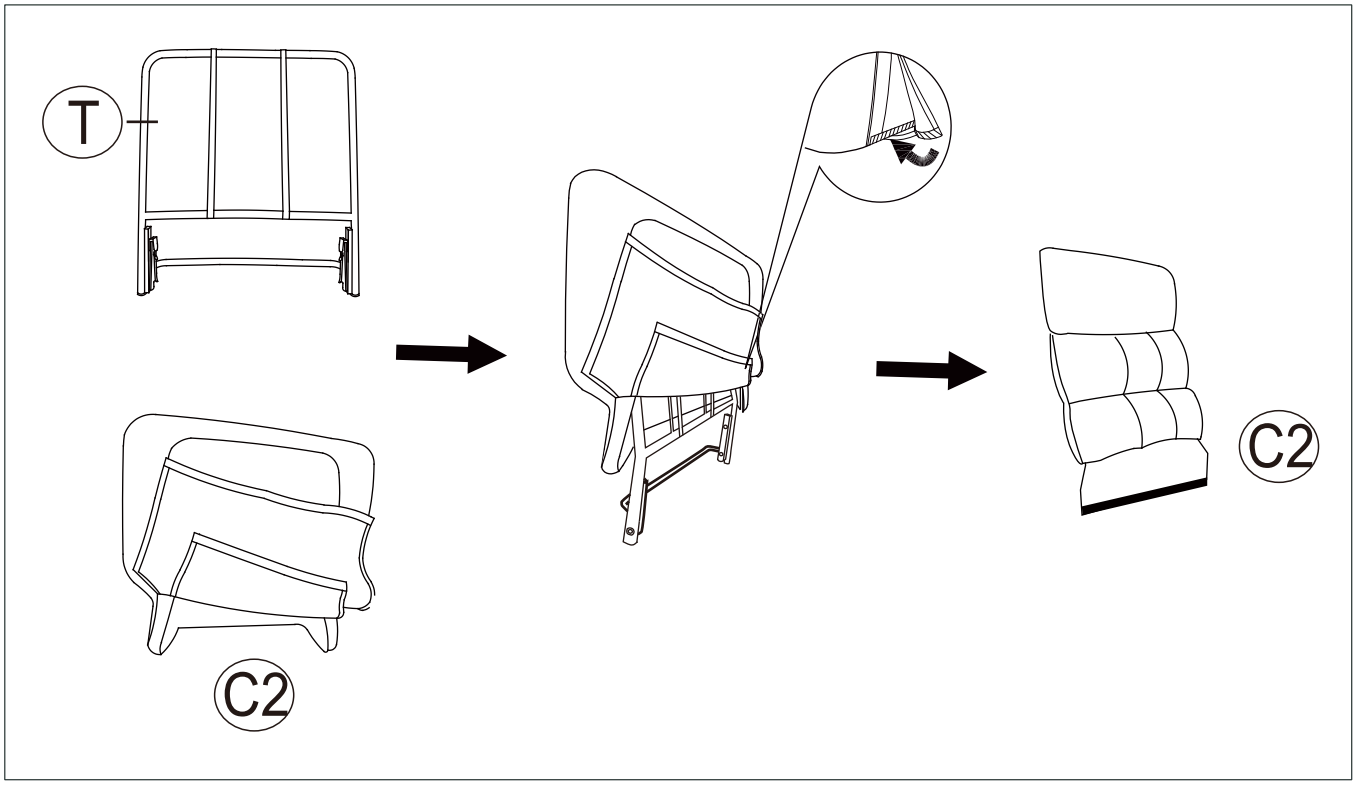

STEP 14 :Plug the back pad into the seat frame . (Note: After inserting the plates separately, insert them to the bottom.The two positions only require installation on the left and right sides.)

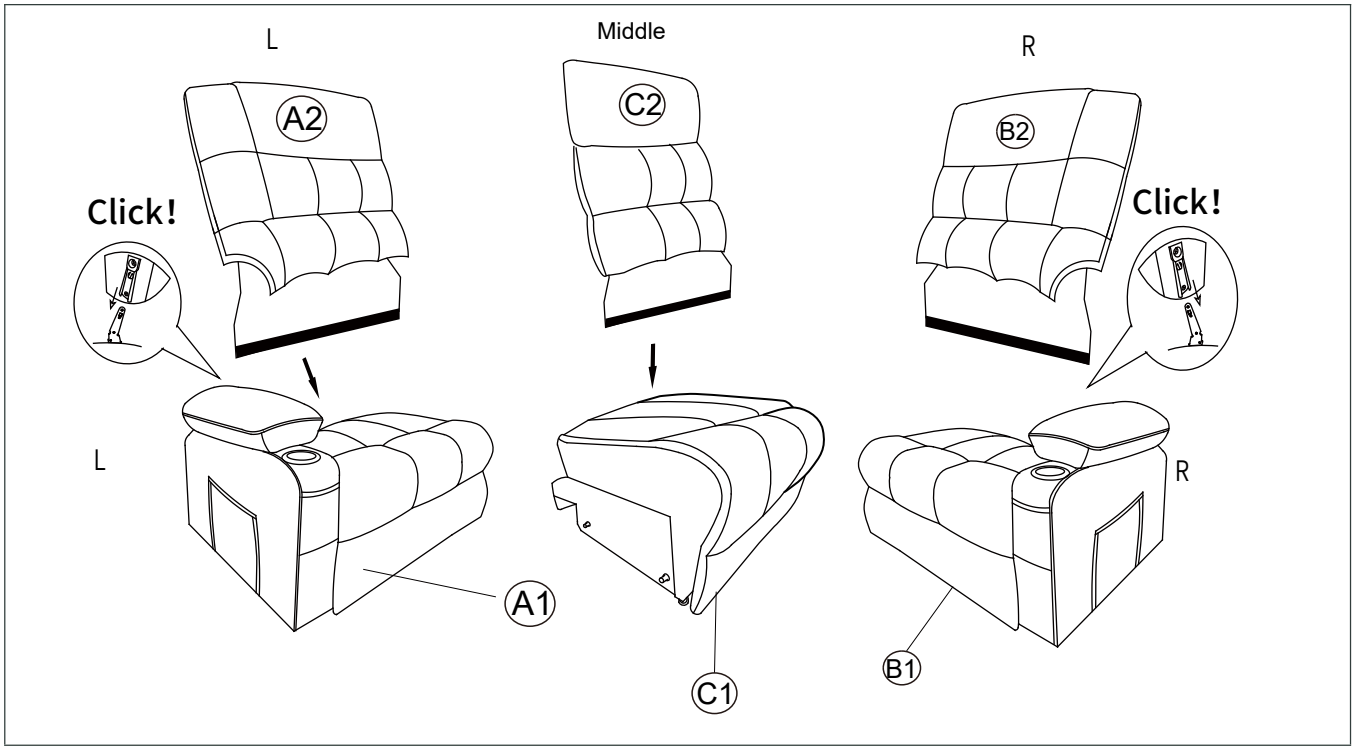

ASSEMBLY INSTRUCTION

STEP 15 :Hang the pendant on the pendant slot, and the three chairs can be connected together.（Installation of three-person seat）

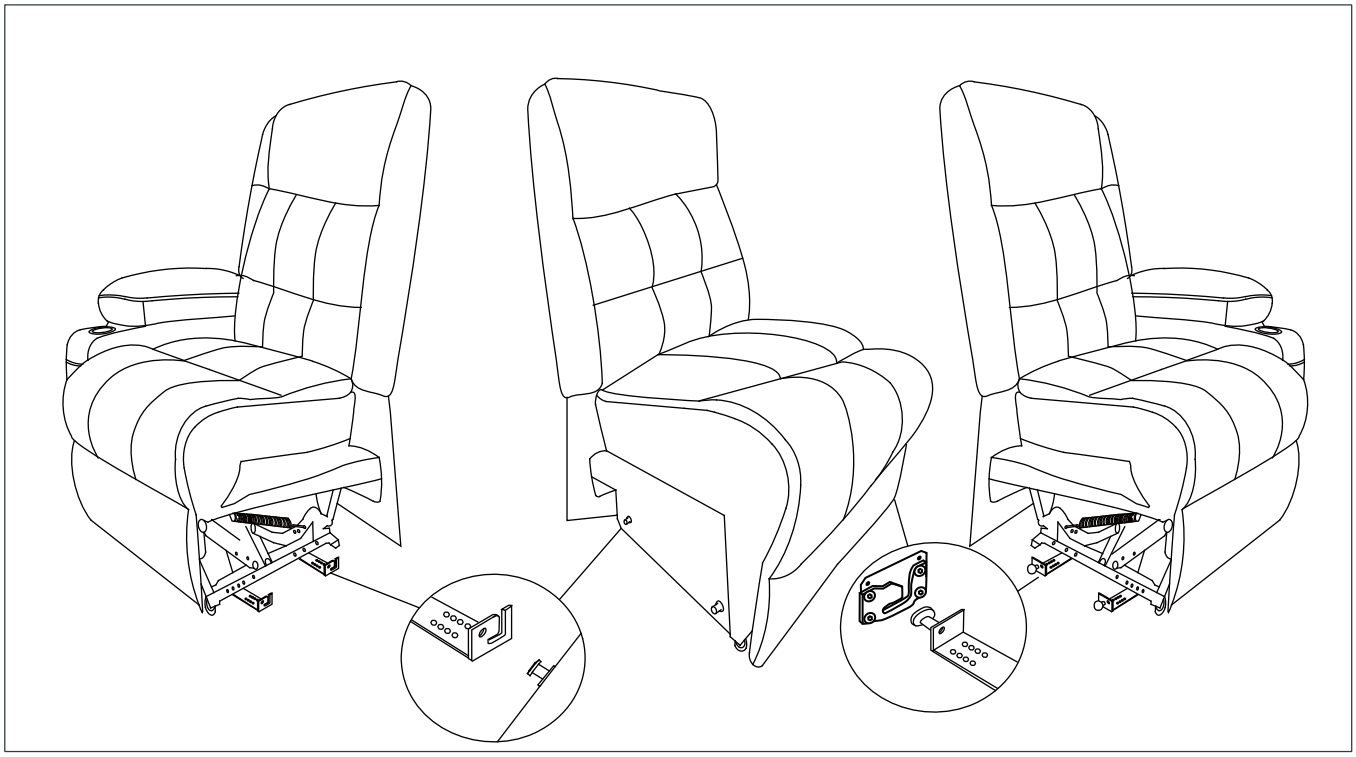

STEP 16 :Hang the pendant on the pendant slot, and the two chairs can be connected together.（Installation of the two-position seats）

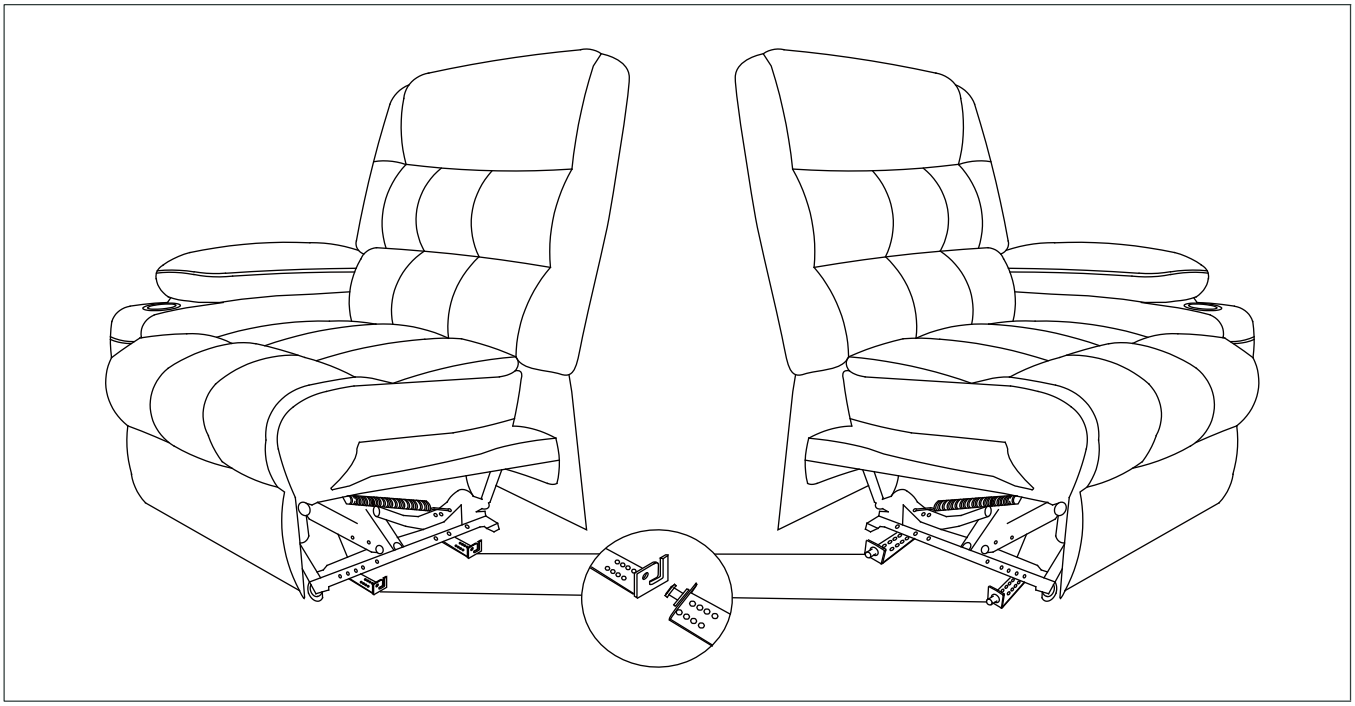

ASSEMBLY INSTRUCTION

STEP 17 :Stick the velcro on the cover cloth behind the seat to the bottom of the seat frame.

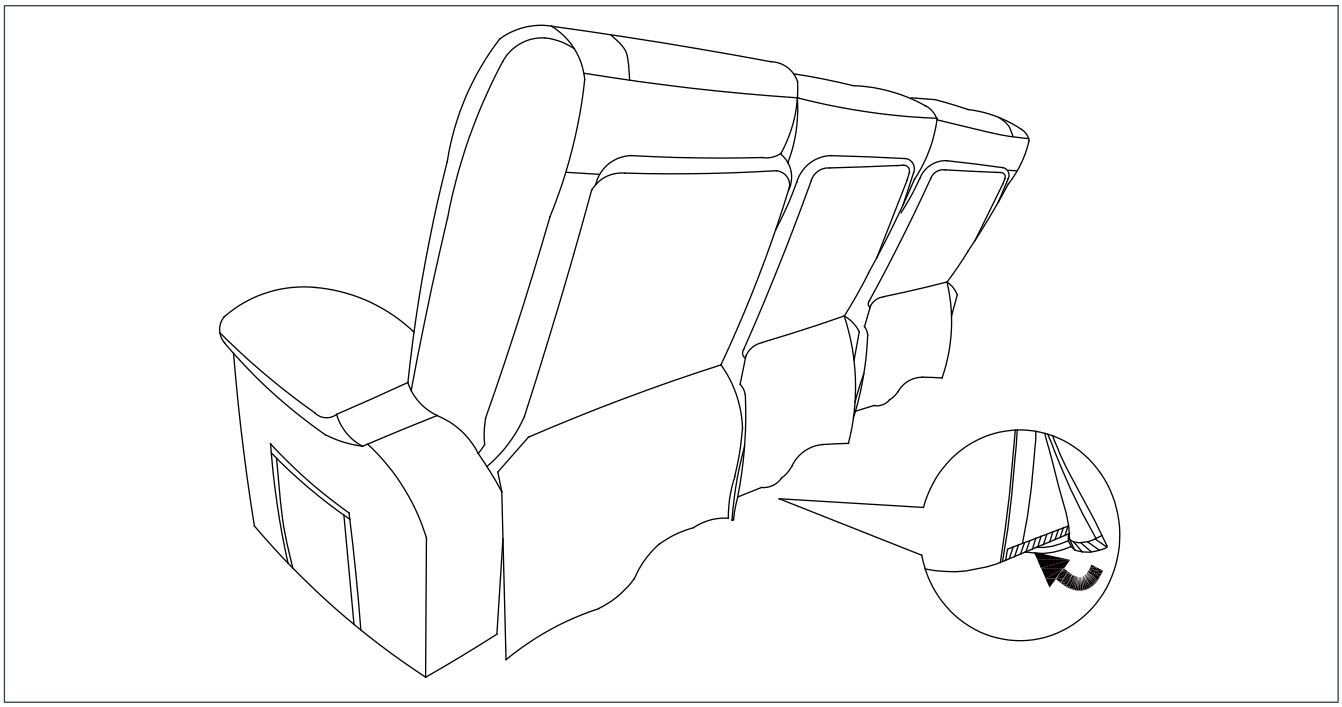

STEP 18 :Place the pillow on the sofa.

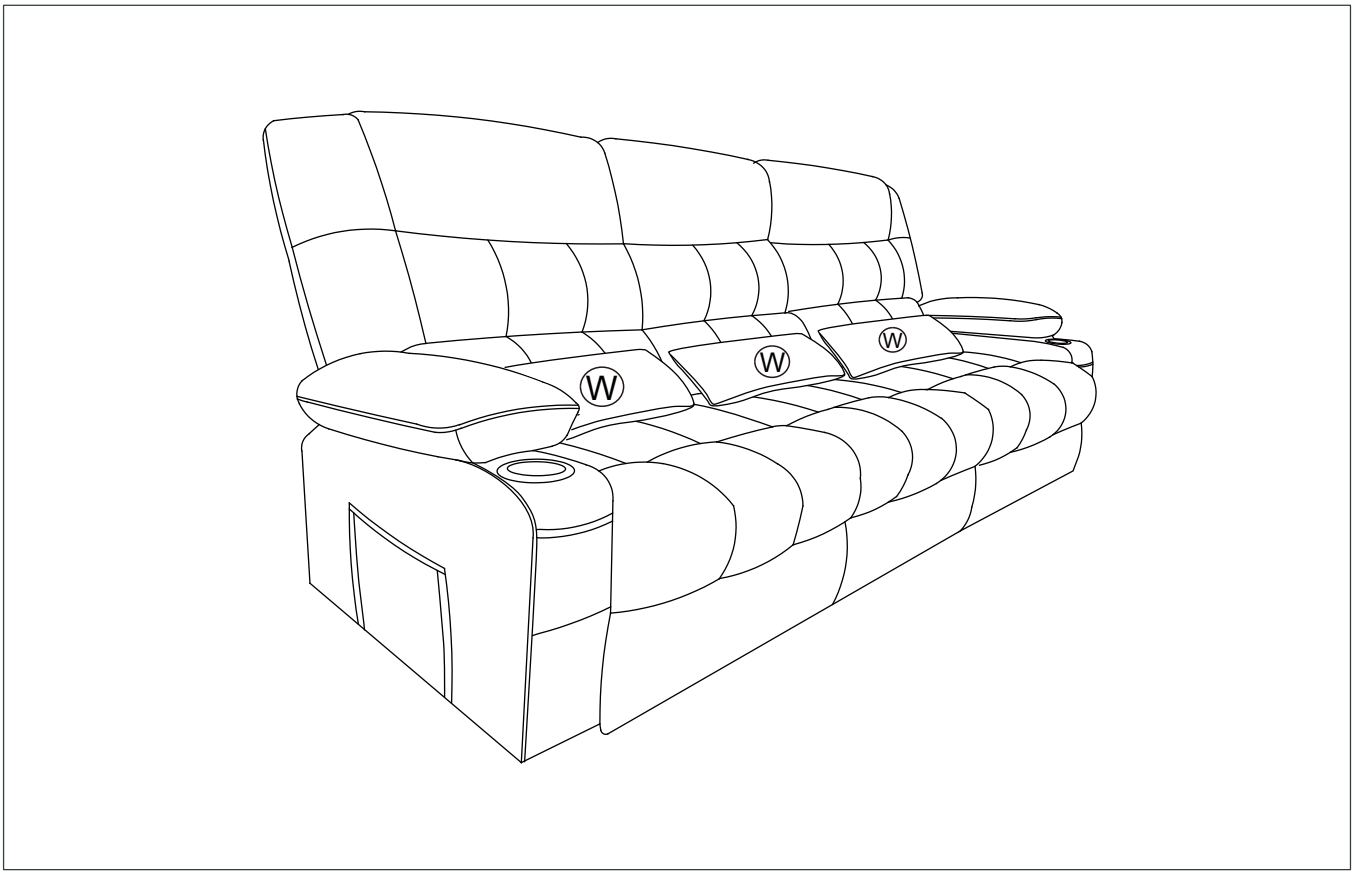

Congratulations!You've assembled

Your Sofa!

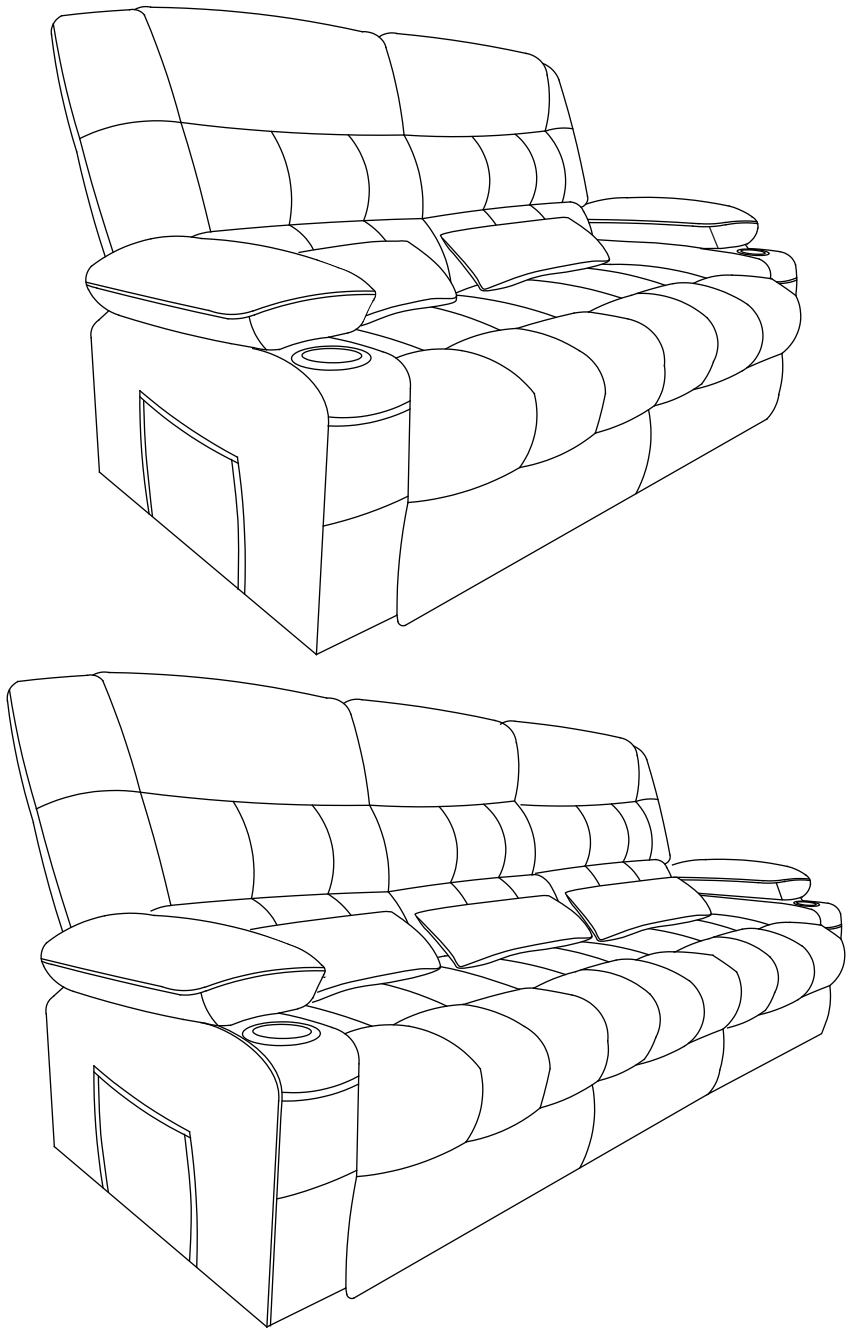

Note: Since the backrest is packed in compression, after the product is installed, you need to tap and adjust the backrest which can help restore fullness. After two days, you will get a Overstuffed Recliners as picture shows.

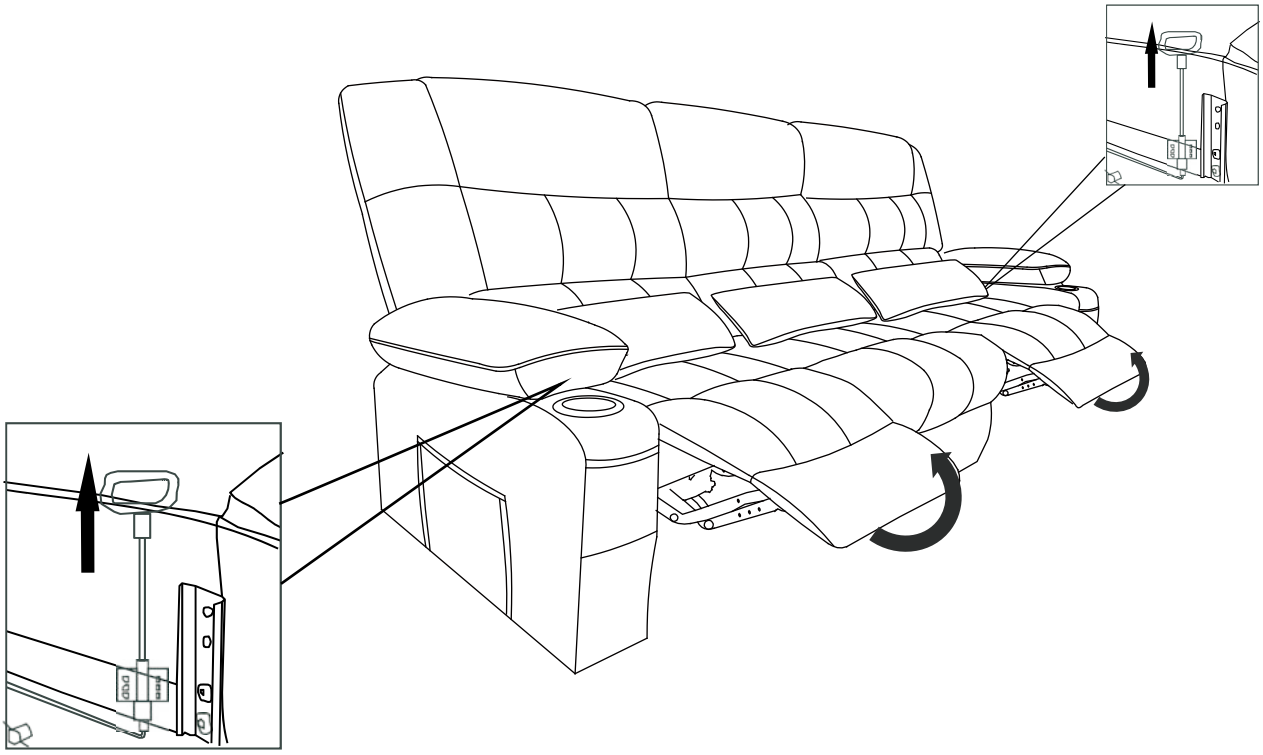

Pull the handle to spread out the SOFA

(The operation method for the
two positions is the same as above.)

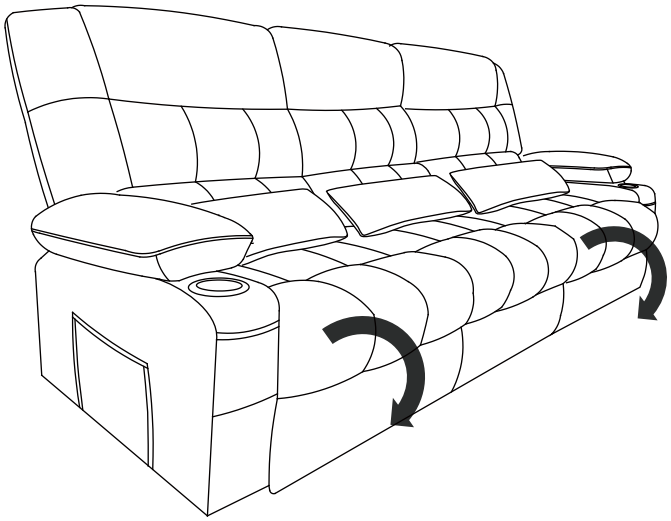

Pull back the SOFA with your legs

(The operation method for the
two positions is the same as above.)

Warnings

- Sit down in the chair gently. To avoid tipping over, do not throw yourself into the chair. Move the chair into the reclining position slowly, making sure that no children or pets are in close proximity. Do not allow children to play on or around the chair, particularly when it is in an open position.
- Close the recliner completely before getting out of it.
- Never sit on the footrest when it is open, even if it is a child.
- To eliminate the risk of tipping over, do not sit on the arms or footrest of the chair.
- The three-seater chair is designed for use by three adults at a time, while the two-seater chair is designed for use by two adults at a time.
- Please forbid people with the following ailments from using this sofa: Those people with severe symptoms of heart disease, high blood pressure, cerebral thrombosis and others who are sensitive to heat or completely insensitive to heat, those with brittle bones or have issues with waist support pregnant women, children and others where it has been determined they are not suitable to use this product under the guidance of doctors.
- To fully recline the sofa, ensure the sofa well, you need to put the sofa at least 19 inches away from the wall or any other obstacle.
- Product cannot touch water, fire, etc. Product can also not come in contact with sharp objects (knives, nails, etc.)

Maintenance Manual Instructions

- To avoid dropping, you should carry the sofa carefully.
- If you find dirt and or stains on the chair, spray the sofa with a sofa specific cleaner then use a sponge or cloth to wipe the dirt away. Do not use water, soapy water or cleaner with waxed wooden areas. Take care to wipe the sofa carefully and gently.
- Do not put the sofa in an area with direct sunlight and do not put the sofa directly in front of an air conditioner, this will fade the upholstery and make it brittle.

How to Disassemble

Please find a strong tool to prod the small piece of metal grooves, then the backrest will be pulled out. The tool is not included.

