ASSEMBLY INSTRUCTIONS

QUEEN MURPHY BED WITH DRAWER

TYPE 1

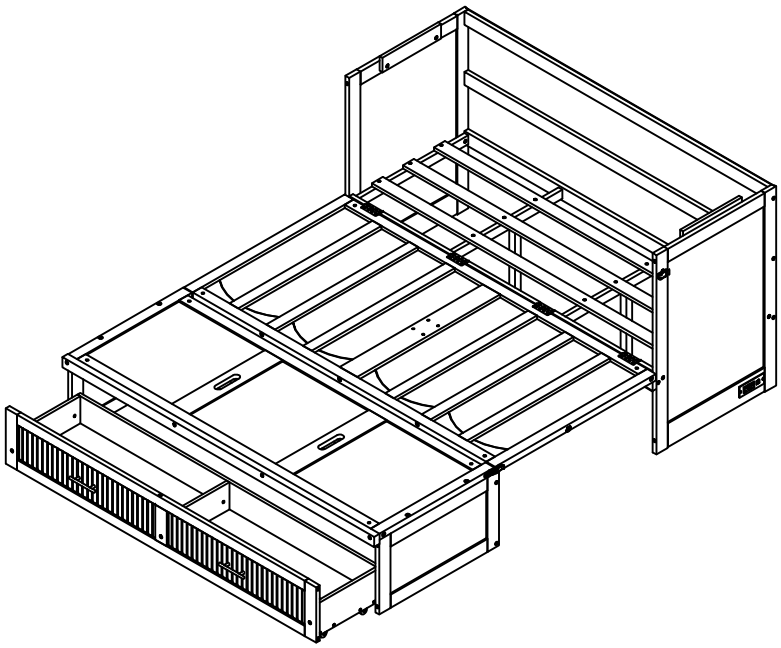

TYPE 2

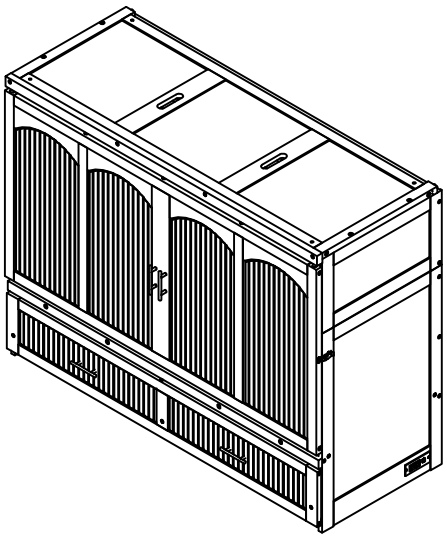

SA33869

Detail View

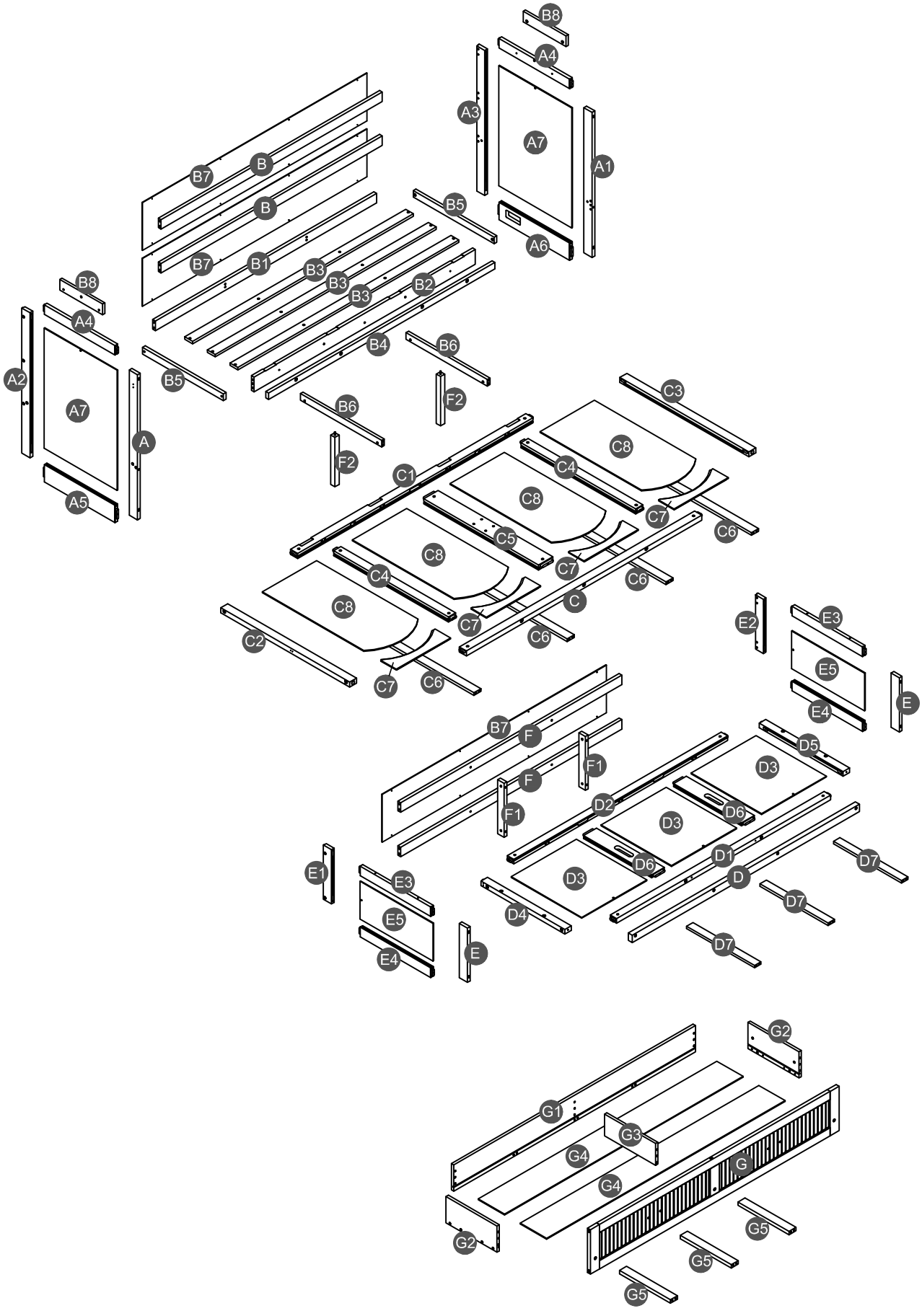
B8
A4
A3
A7
A1
B7
B
B
B5
A6
B7
B1
B3
B3
B3
B2
B8
A4
B4
B6
A2
B5
A7
A
B6
F2
F2
C3
C8
C4
C1
C8
C7
C6
C5
C8
C7
C6
C4
C
C8
C7
C6
C2
C7
C6
E2
E3
E5
E
E4
B7
F
D5
F1
D3
F
D2
D6
F1
D3
E1
D6
D1
D7
E3
D3
D
E5
D4
D7
E4
E
D7
G2
G1
G3
G4
G
G4
G5
G2
G5
G5

Part list (Box 1 - SA33869 (1-2))

A 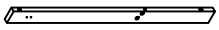 Vertical bar HB (left front) -1pc	**A1** 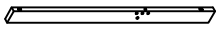 Vertical bar HB (right front) -1pc	**A2** 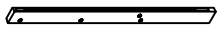 Vertical bar HB (left back) -1pc
A3  Vertical bar HB (right back) -1pc	**A4** 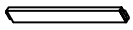 Upper horizontal bar HB- 2pcs	**A5**  Lower horizontal bar HB (left) -1pc
A6  Lower horizontal bar HB (right) -1pc	**B** 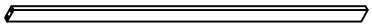 Upper horizontal bar HB - 2pcs	**B1** 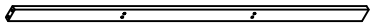 Lower horizontal bar HB -1pc
B2 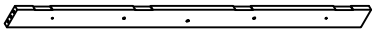 Horizontal bar HB (front) - 1pc	**B3**  Slat - 3pcs	**B4** Support HB (front) - 1pc
B5 Horizontal bar HB (left/right) - 2pcs	**B6** Lower support slat - 2pcs	**B7** 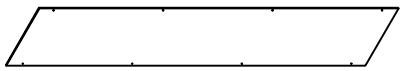 Back panel HB/FB - 3pcs
B8 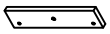 Support HB - 2pcs	**C** 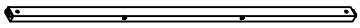 Horizontal bar (front) - 1pc	**C1**  Horizontal bar (back) - 1pc
C7  Profile bar - 4pcs	**D** 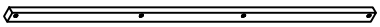 Support FB (front) - 1pc	**D1** 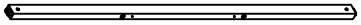 Horizontal bar FB (front) - 1pc
D2  Horizontal bar FB (back) - 1pc	**D6**  Divider horizontal bar FB - 2pcs	**D7** Horizontal bar support - 3pcs
E  Vertical bar FB (left/right) - 2pcs	**E1**  Vertical bar FB (left back) -1pc	**E2**  Vertical bar FB (right back) -1pc
E3  Upper horizontal bar FB- 2pcs	**E4**  Lower horizontal bar FB - 2pcs	**F**  Upper horizontal bar FB - 2pcs

F1  Vertical bar support FB -2pcs	**F2**  Leg support - 2pcs	**G** 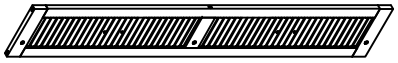 Front drawer panel - 1pc
G1 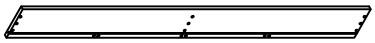 Back drawer panel - 1pc	**G2** 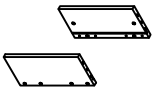 Left / right drawer panel - 2pcs	**G3**  Divider drawer panel - 1pc
G4 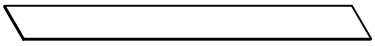 Drawer bottom - 2pcs	**G5**  Support drawer - 3pcs	

Part list & Hardware list (Box 2 - SA33869 (2-2))

A7 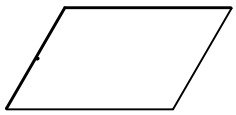 Side panel HB - 2pcs	**C2** 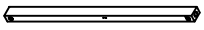 Horizontal bar (left) - 1pc	**C3**  Horizontal bar (right) - 1pc
C4  Horizontal bar - 2pcs	**C5**  Mid horizontal bar support - 1pc	**C6** Horizontal bar support - 4pcs
C8 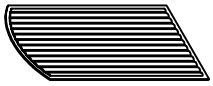 Side panel - 4pcs	**D3** 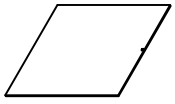 Side panel FB - 3pcs	**D4** Horizontal bar FB (left) - 1pc
D5  Horizontal bar FB (right) - 1pc	**E5** 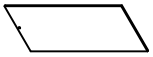 Side panel FB - 2pcs	

Hardware List (Box 2 - SA33869 (2-2))

1  Ø10*20mm Wood dowel (6pcs)	**2** 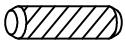 Ø8*30mm Wood dowel (73pcs)	**3** 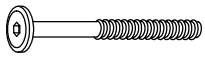 (Ø15)1/4"*80mm Hex-Head bolts (10pcs)
4  (Ø12)1/4"*60mm Hex-Head bolts (24pcs)	**5**  (Ø12)1/4"*35mm Hex-Head bolts (4pcs)	**6**  (Ø12)1/4"*65mm Hex-Head bolts (26pcs)
7  (Ø12)1/4"*40mm Hex-Head bolts (8pcs)	**8**  (Ø12)1/4"*30mm Hex-Head bolts (6pcs)	**9**  1/4"*15 (9.5mm) Horizontal-Hole bolts(34pcs)
10 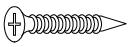 Ø4*30mm Wood screws (20pcs)	**11**  Ø3.5*15mm Wood screws (34pcs)	**12** 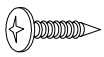 Ø3*12mm Wood screws (24pcs)
13 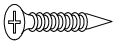 Ø3.5*19mm Wood screws (36pcs)	**14** 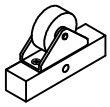 100*52*20 mm Wheels (4pcs)	**15**  45*20*33 mm Wheels (2pcs)
16 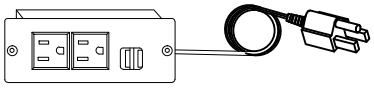 125*47*43mm Power outlet (1pc)	**17** 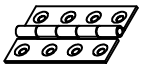 76*42*2mm Hinger (4pcs)	**18**  60*28*15mm Metal bracket (4sets)
19 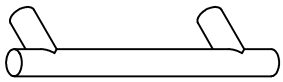 125*33*10mm Handle (4pcs)	**20**  5/32"*10mm Ph zinc(Knob) (8pcs)	**21**  (1/4")4.5*58mm Allen key (1pc)
22 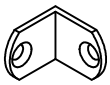 21*17*17*2mm Metal bracket (6pcs)	**23**  Ø9*32mm Plastic anchor (2pcs)	**24** 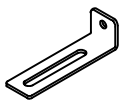 58*16*16*(1.5mm) Metal bracket (2pcs)
25  Ø4*38mm Wood screws (2pcs)		

STEP 1:

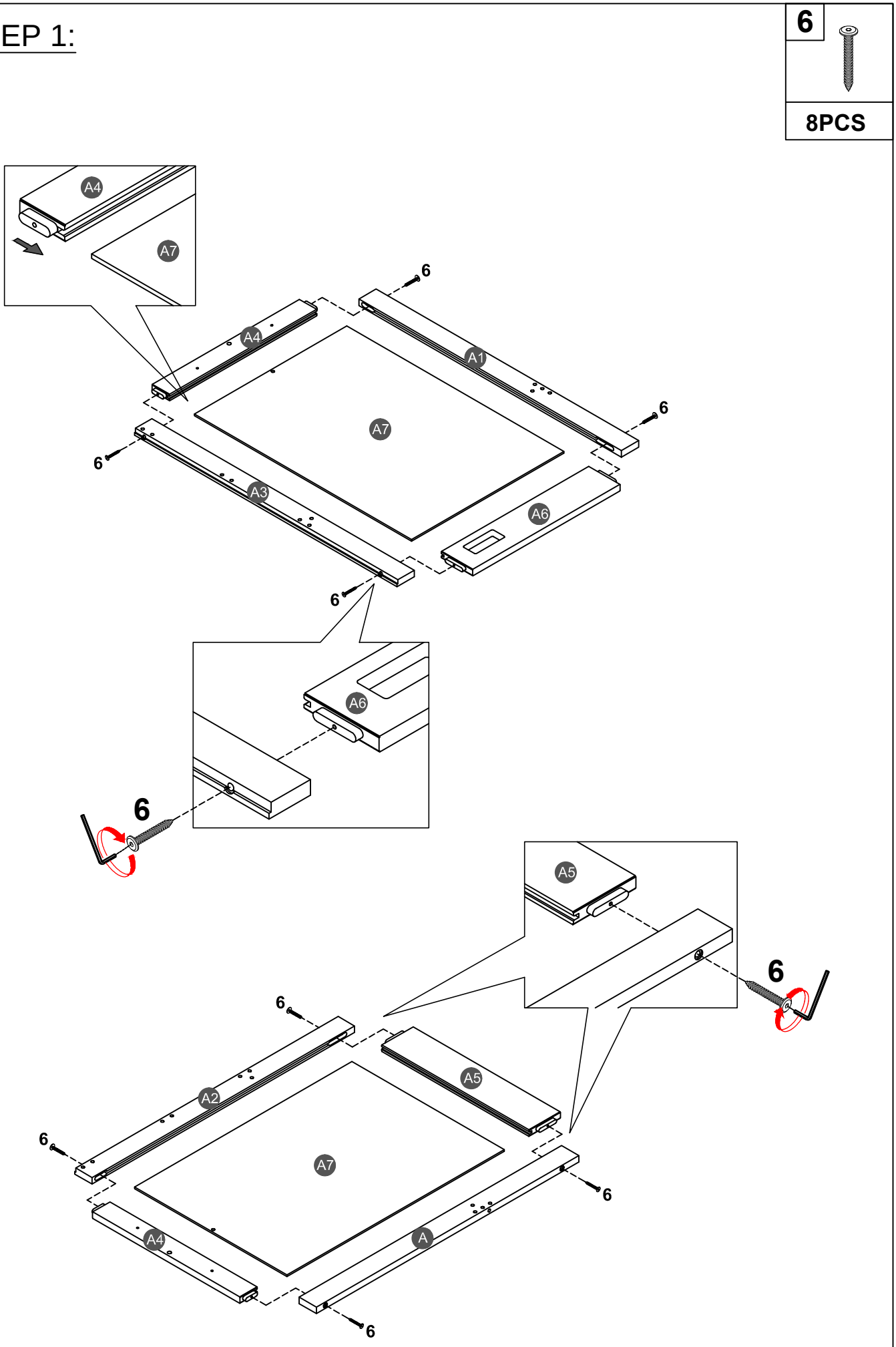

STEP 2:

5
4PCS

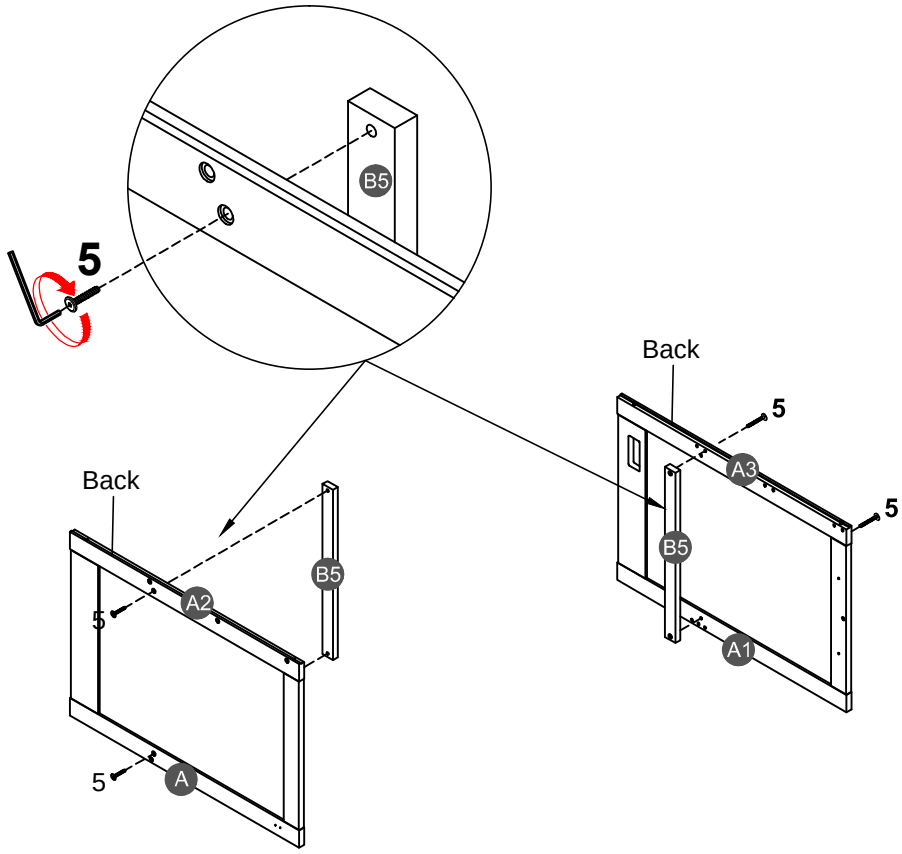

STEP 3:

2	4	9
2PCS	2PCS	2PCS

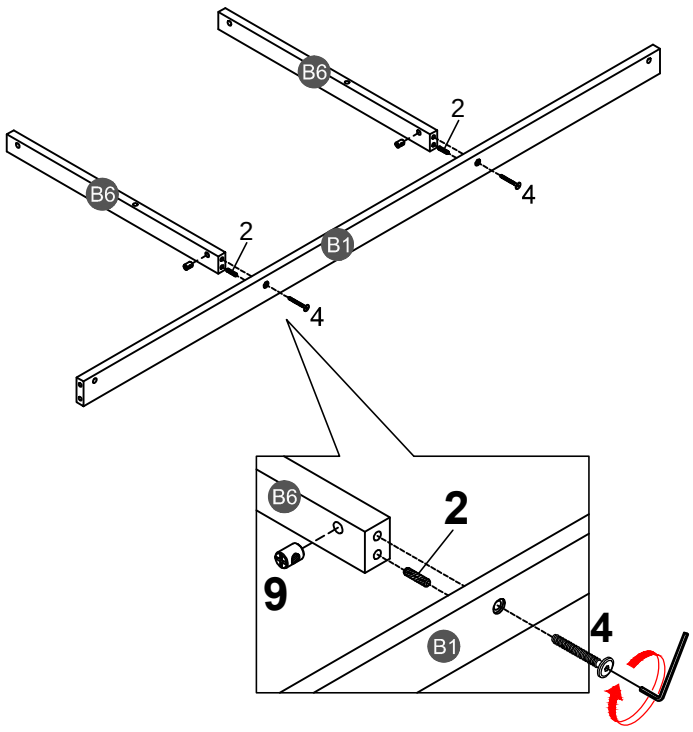

STEP 4:

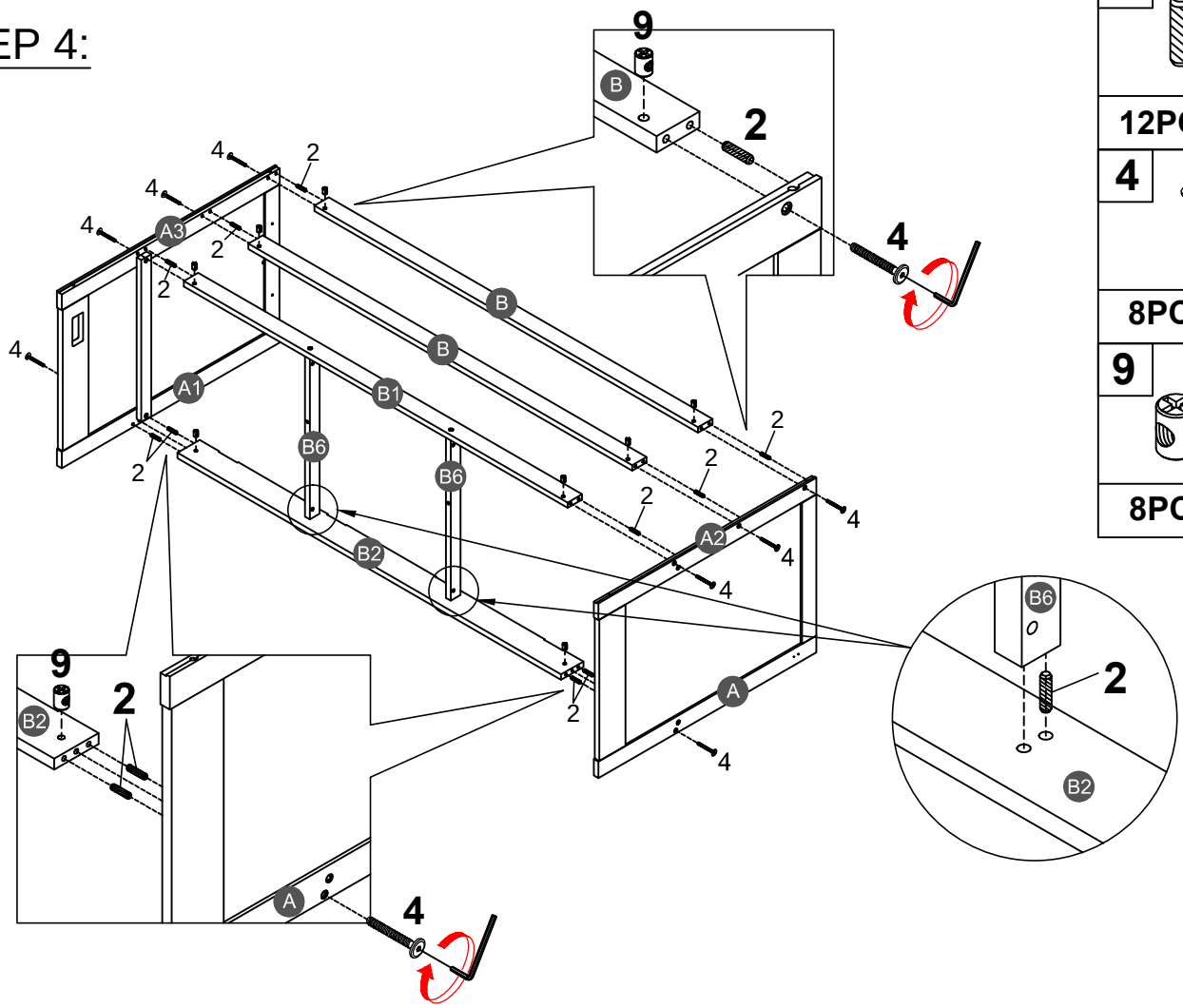

2	12PCS
4	8PCS
9	8PCS

STEP 5:

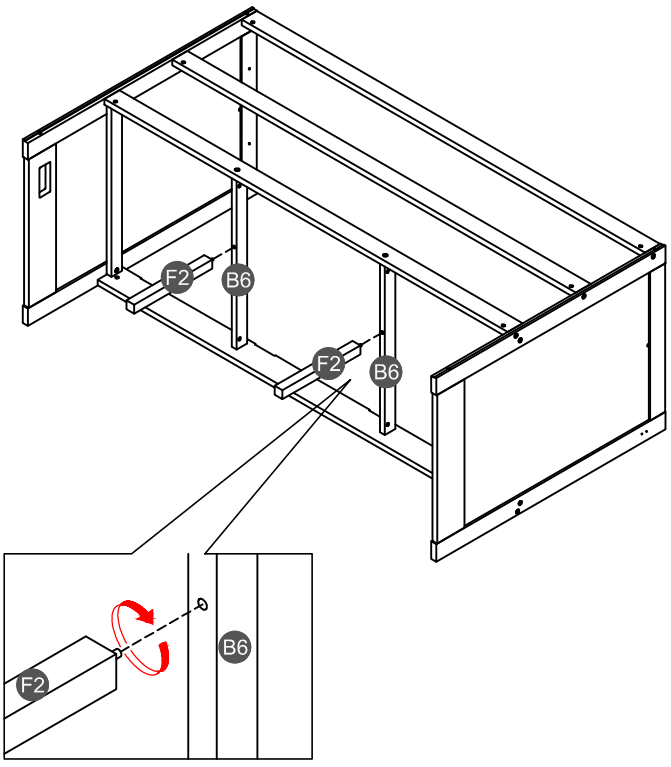

STEP 6:

1	8
2PCS	4PCS

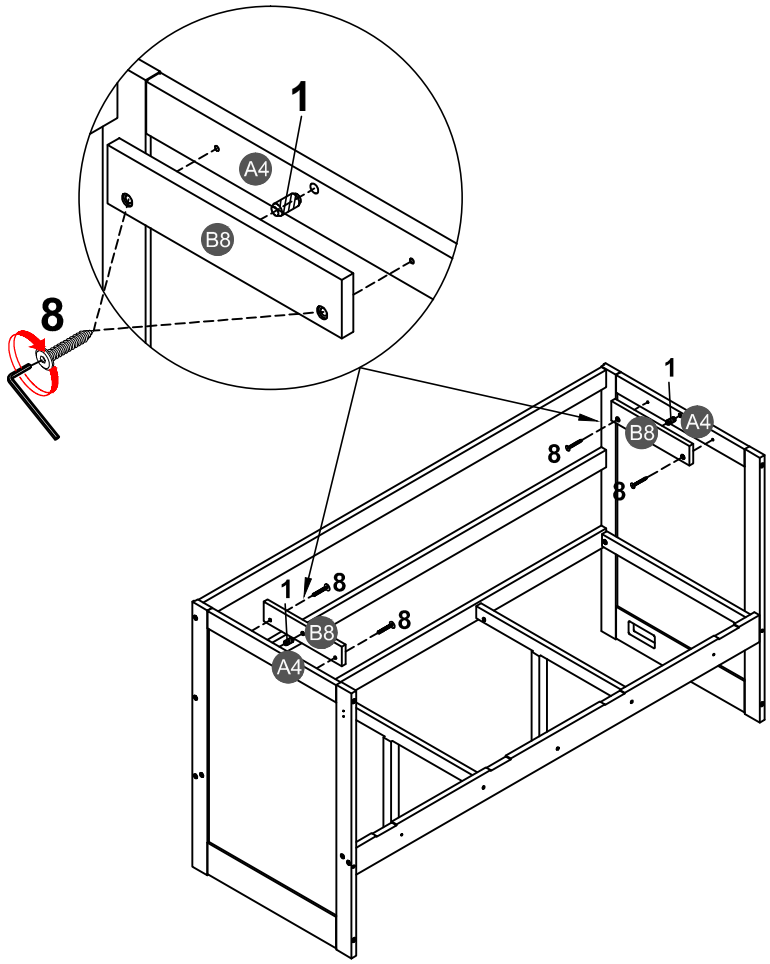

STEP 7:

2	8	3	9
3PCS	2PCS	2PCS	2PCS

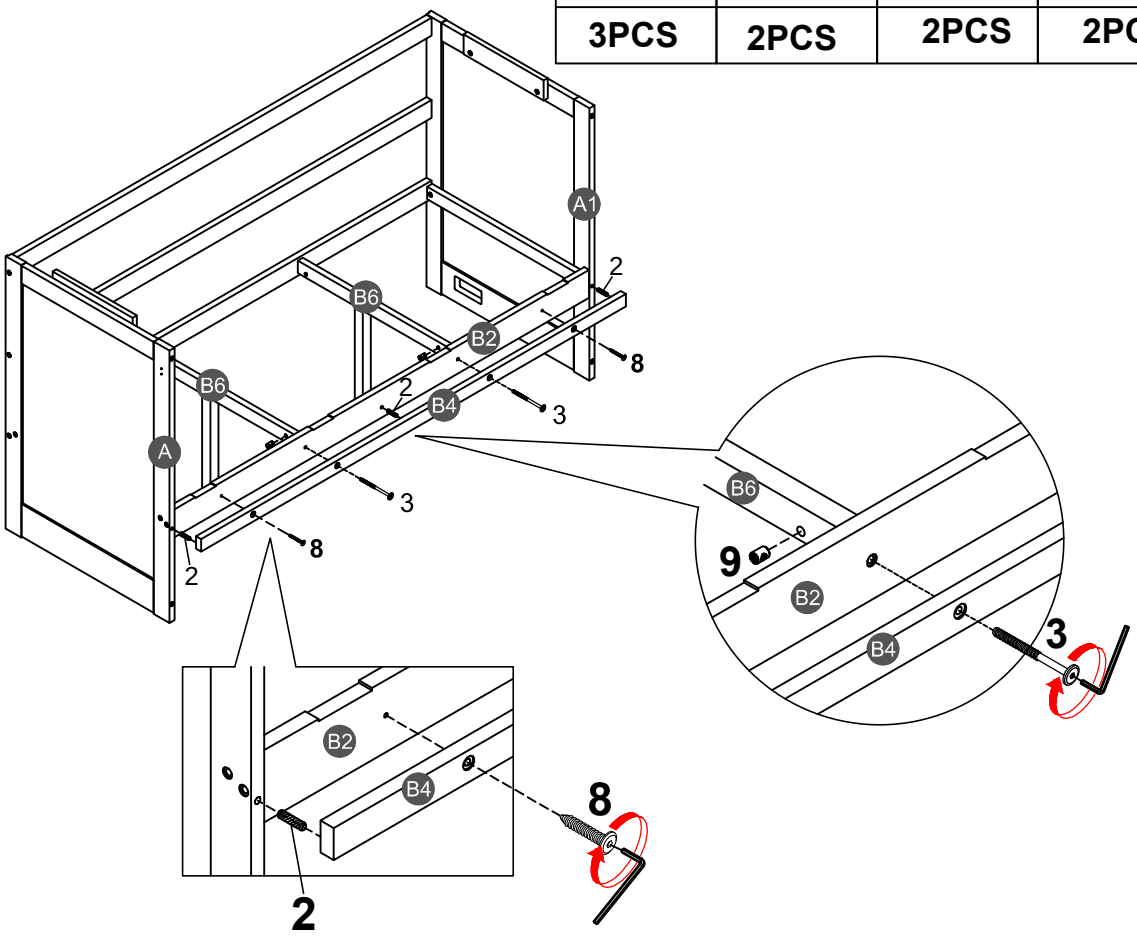

STEP 8:

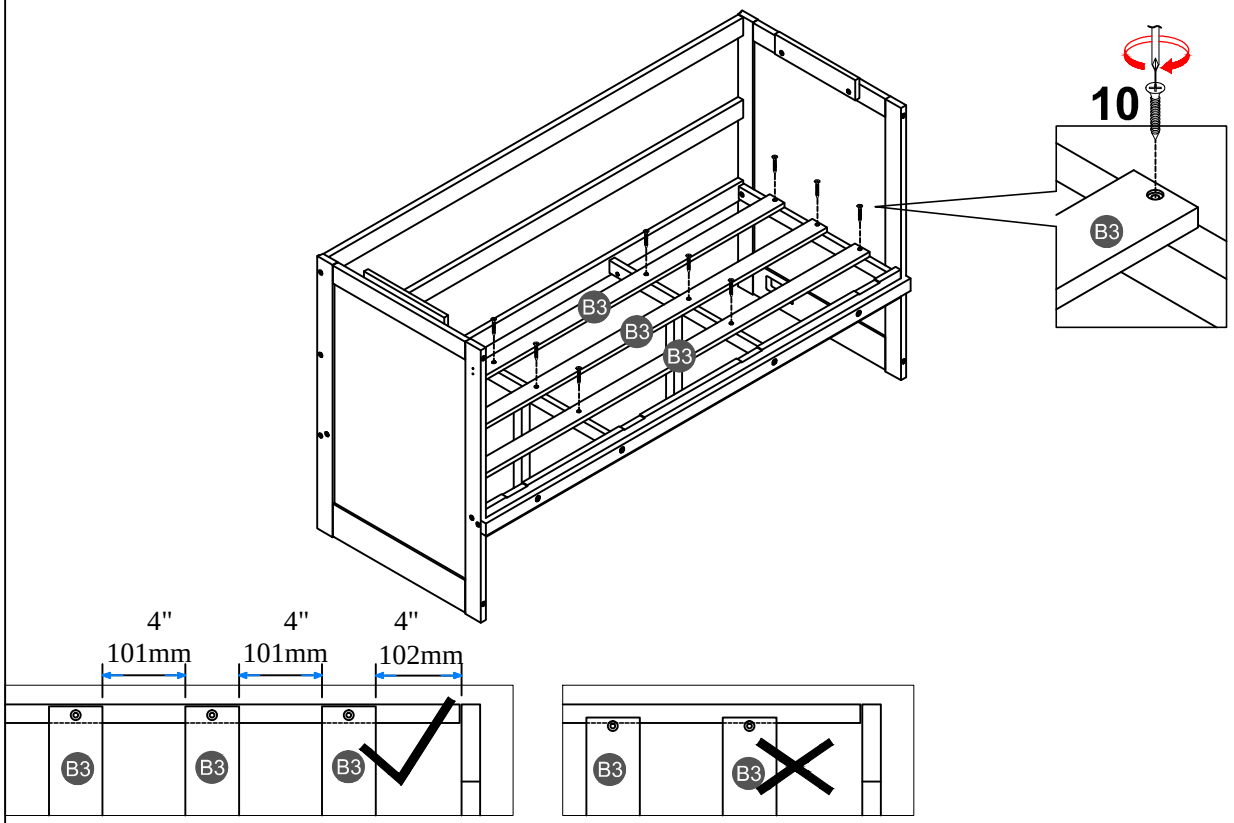

NOTE: Please make sure the bed slats close to the side rail before locking the screws to avoid breakage. This step is required for both the left and right sides. Moreover, please do not lock the screws of the bed slats at the outermost edge to avoid damaging.

STEP 9:

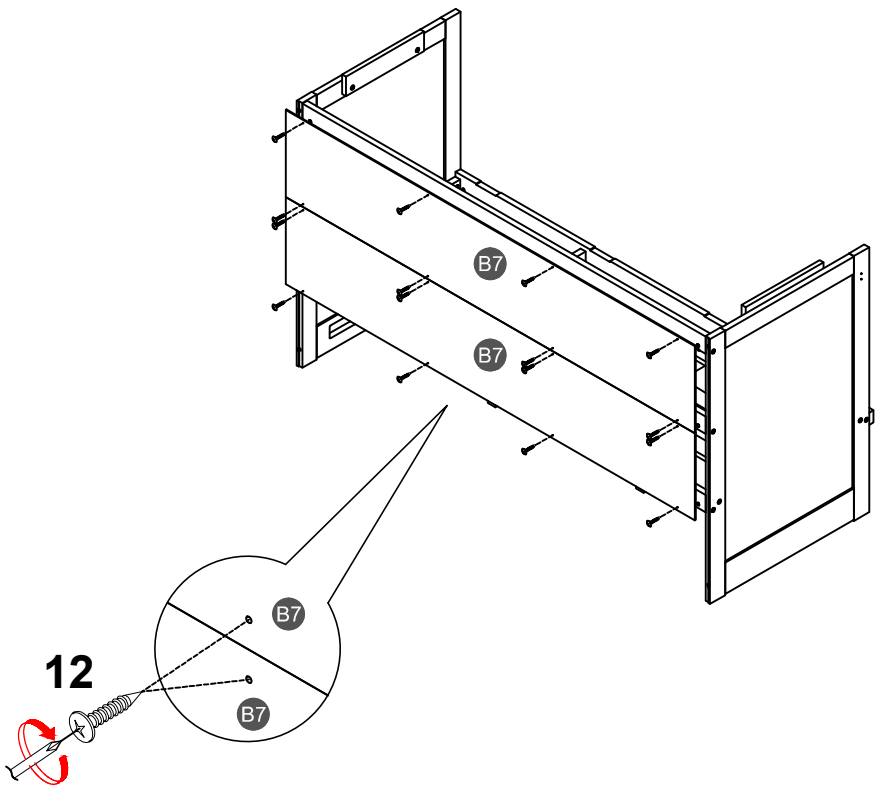

STEP 10:

11	16	18
6PCS	1PC	2PCS

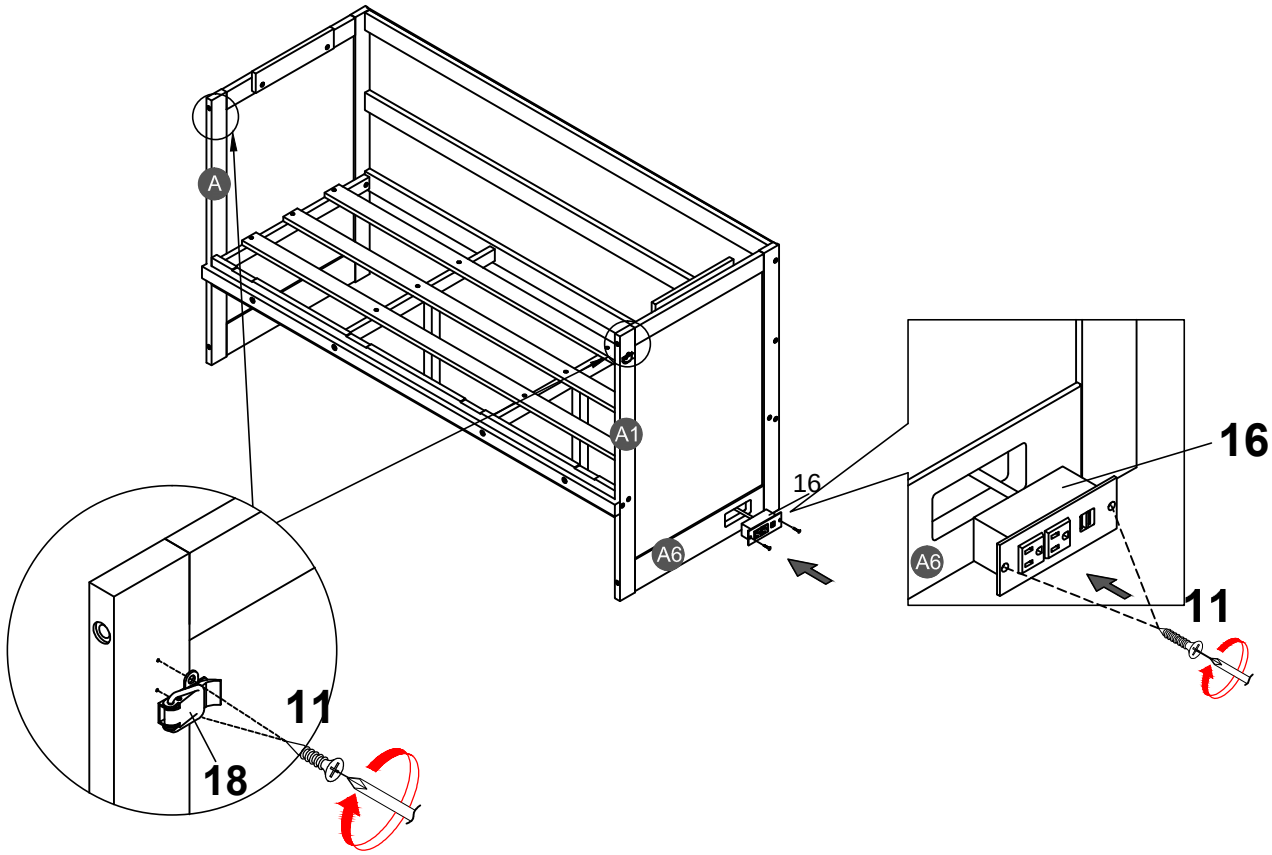

STEP 11:

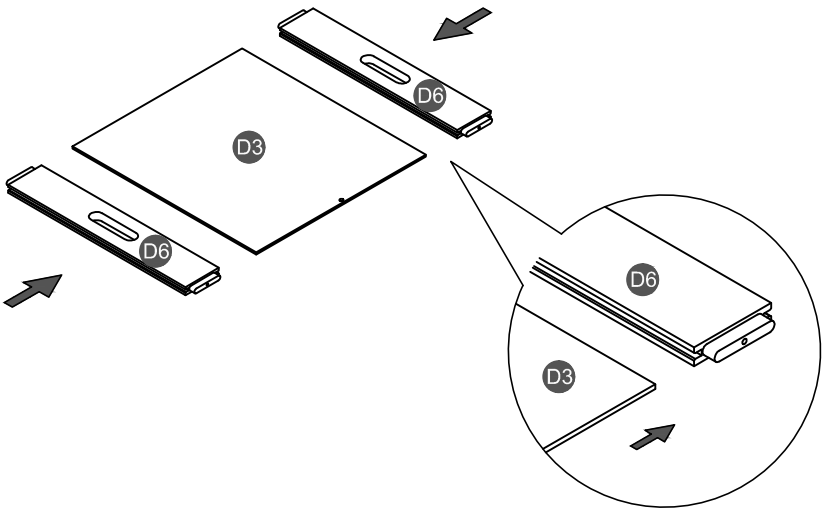

STEP 12:

2	6
12PCS	4PCS

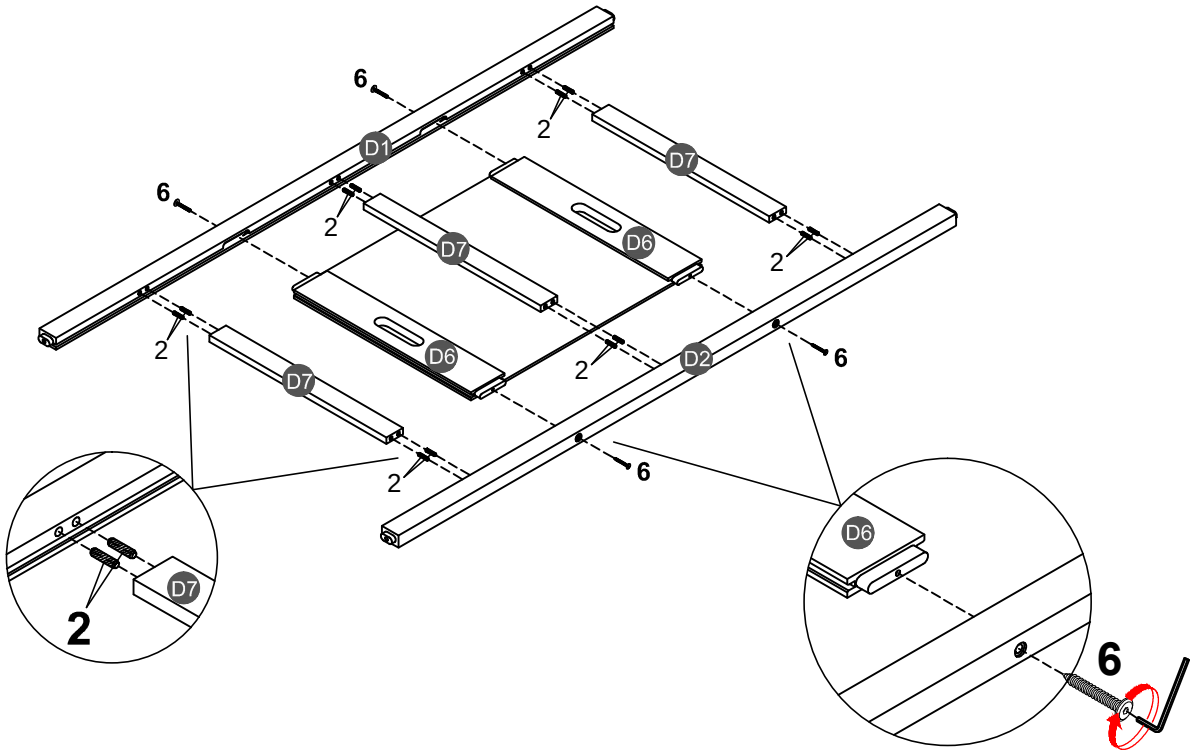

STEP 13:

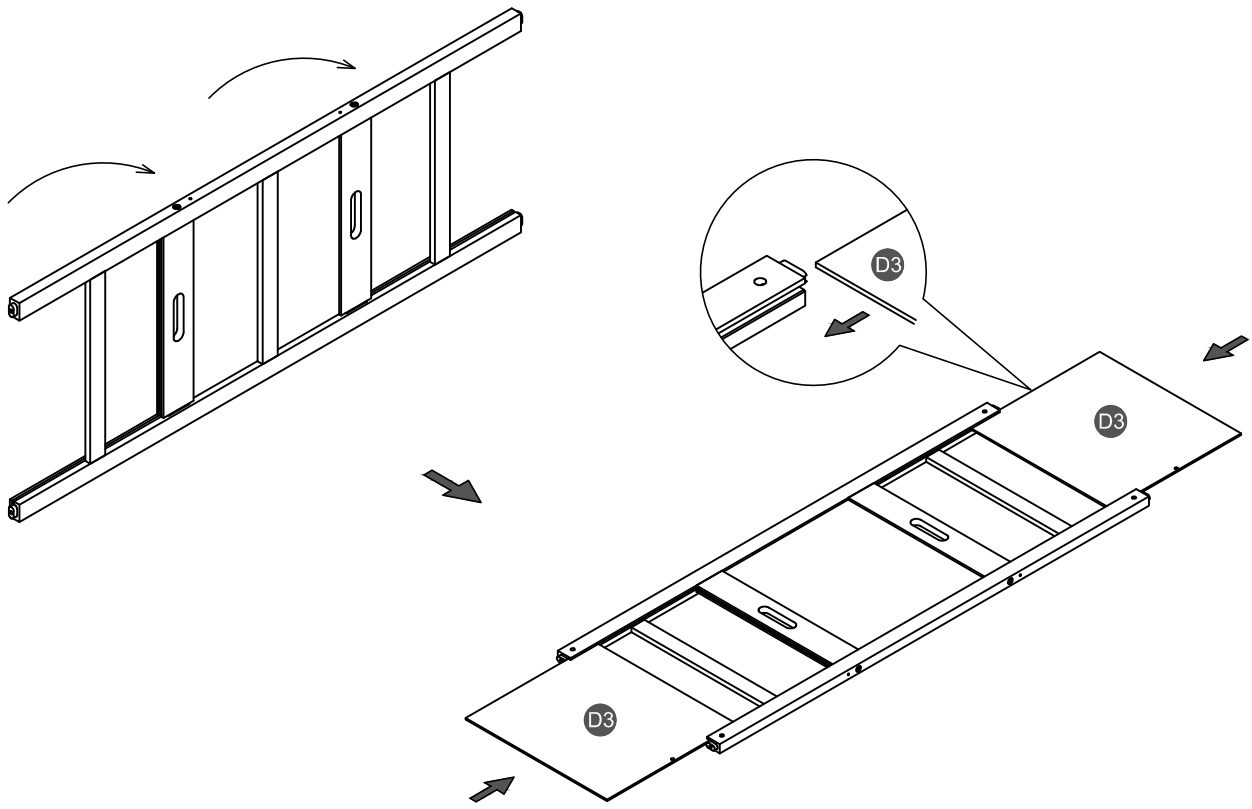

STEP 14:

3	9
4PCS	4PCS

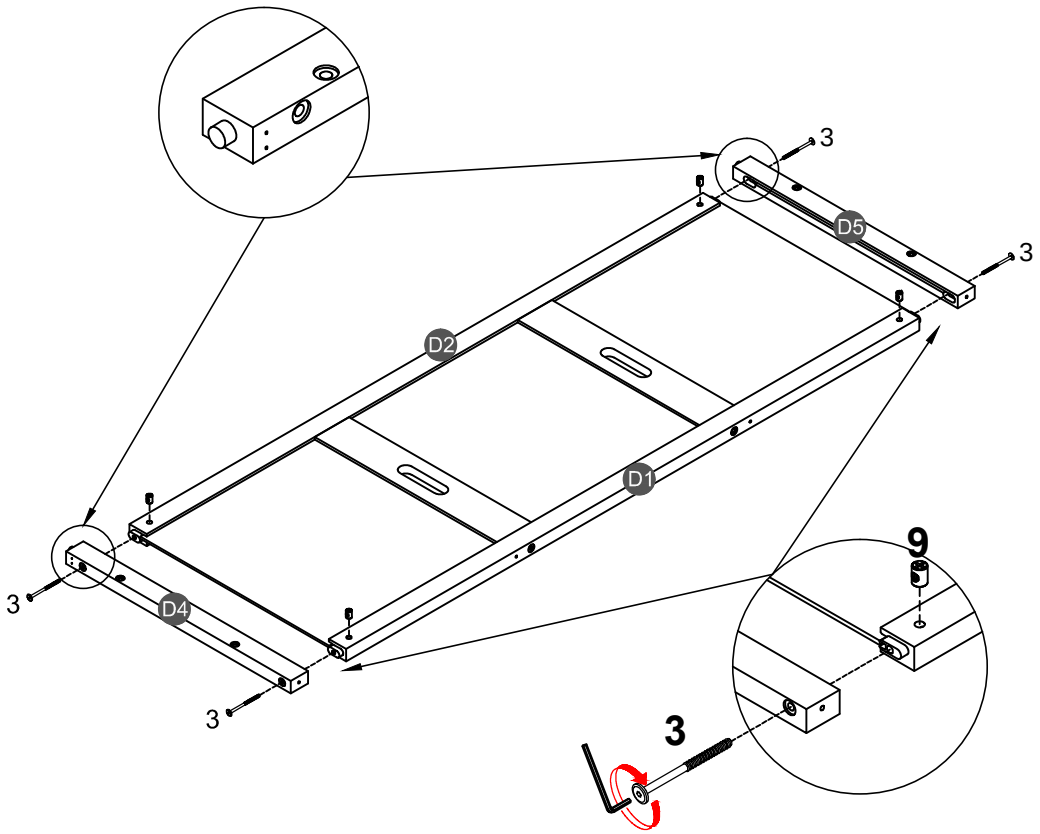

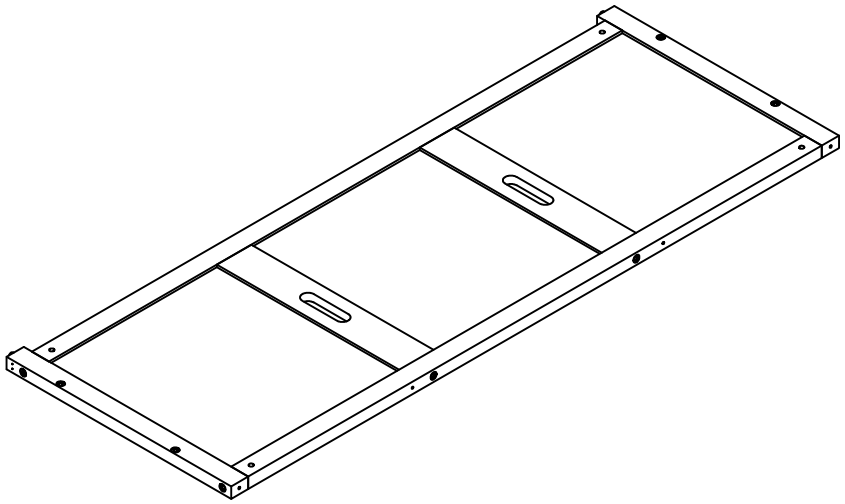

STEP 15:

6
8PCS

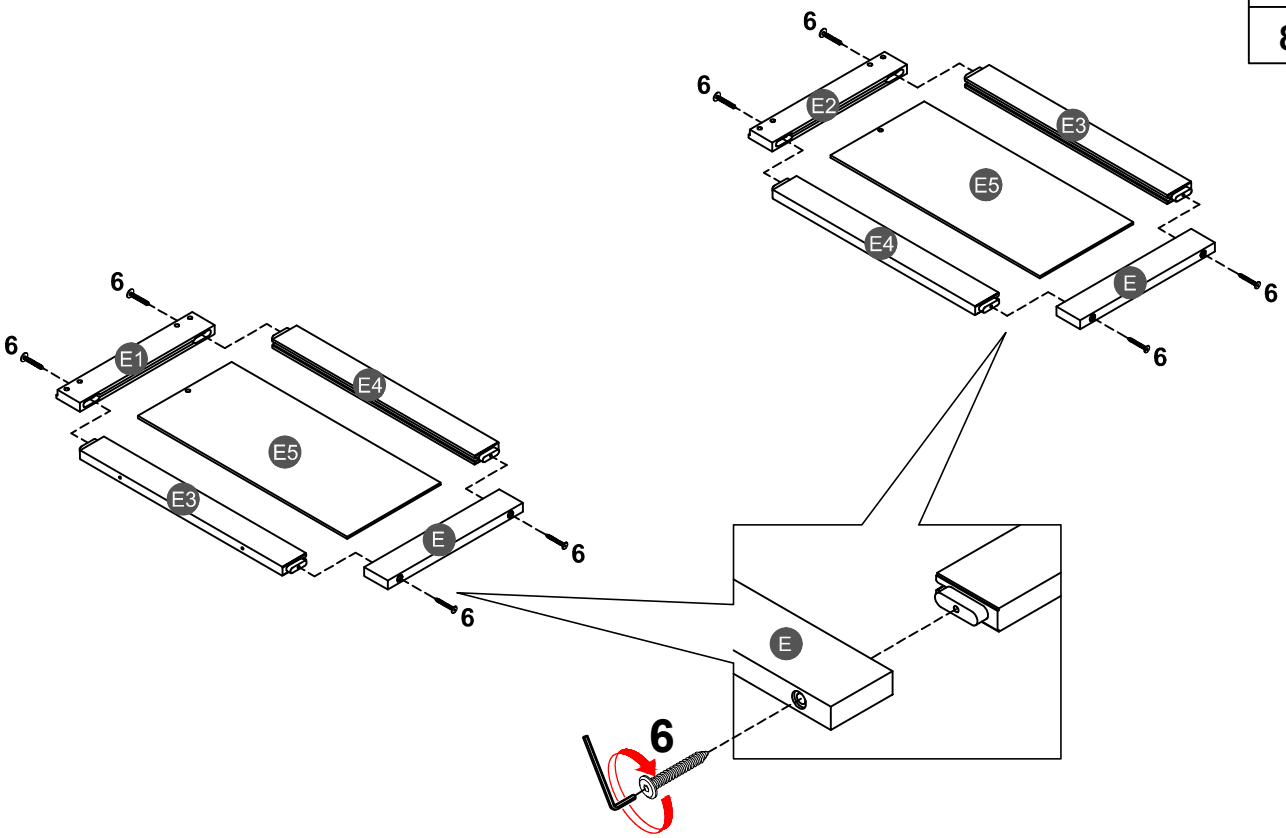

STEP 16:

2	4	9
4PCS	4PCS	4PCS

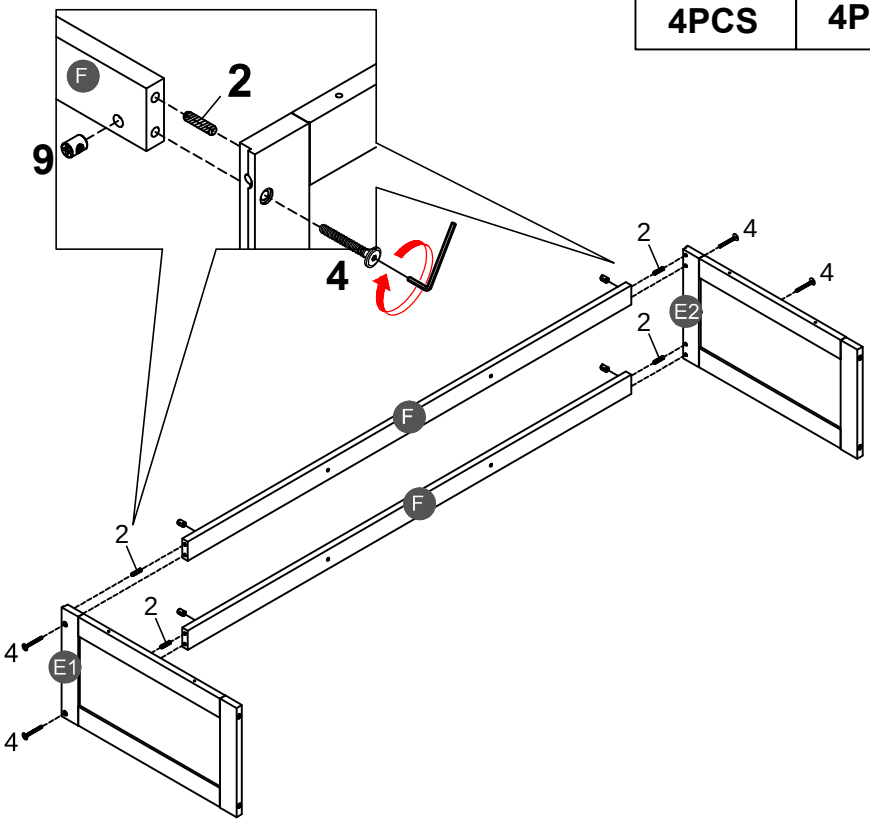

STEP 17:

4	9
4PCS	4PCS

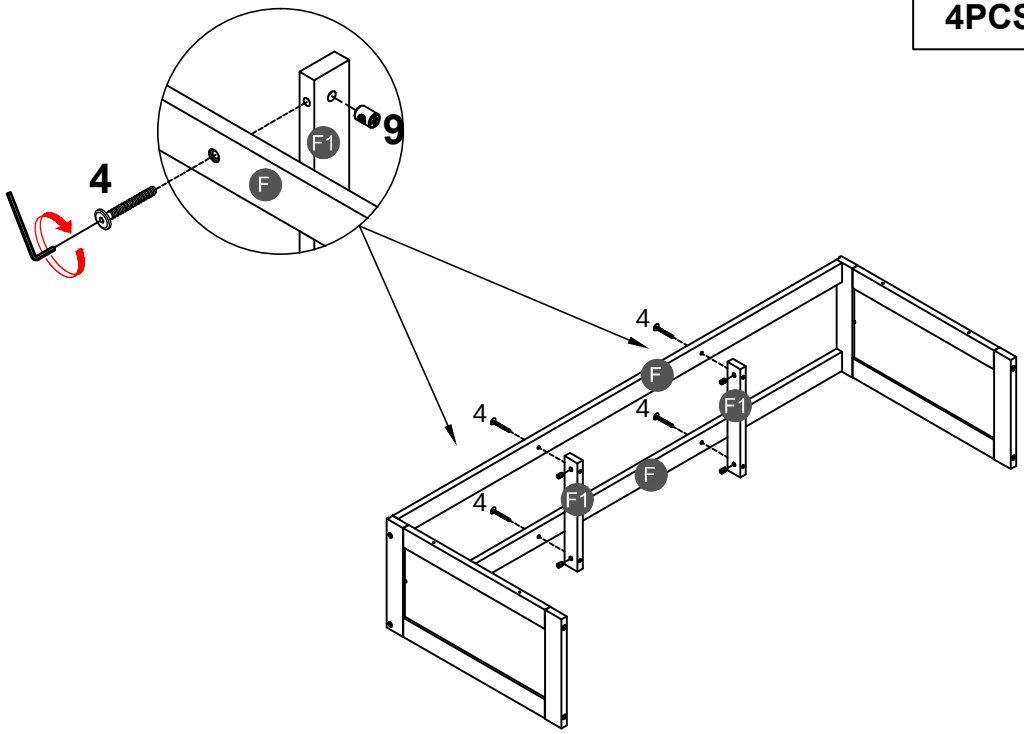

STEP 18:

7
4PCS

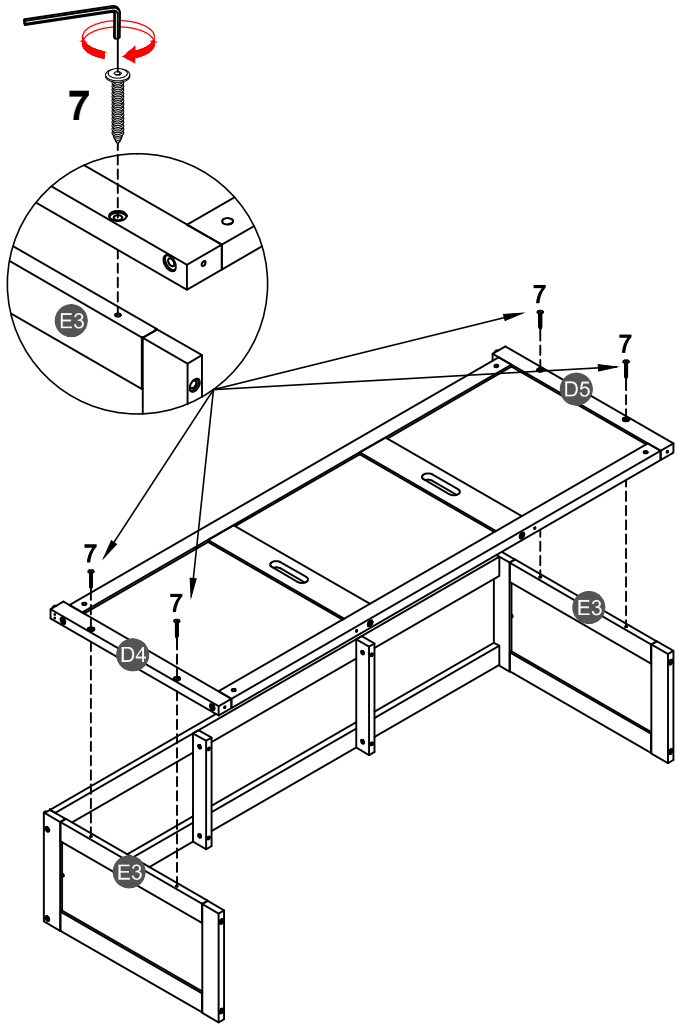

STEP 19:

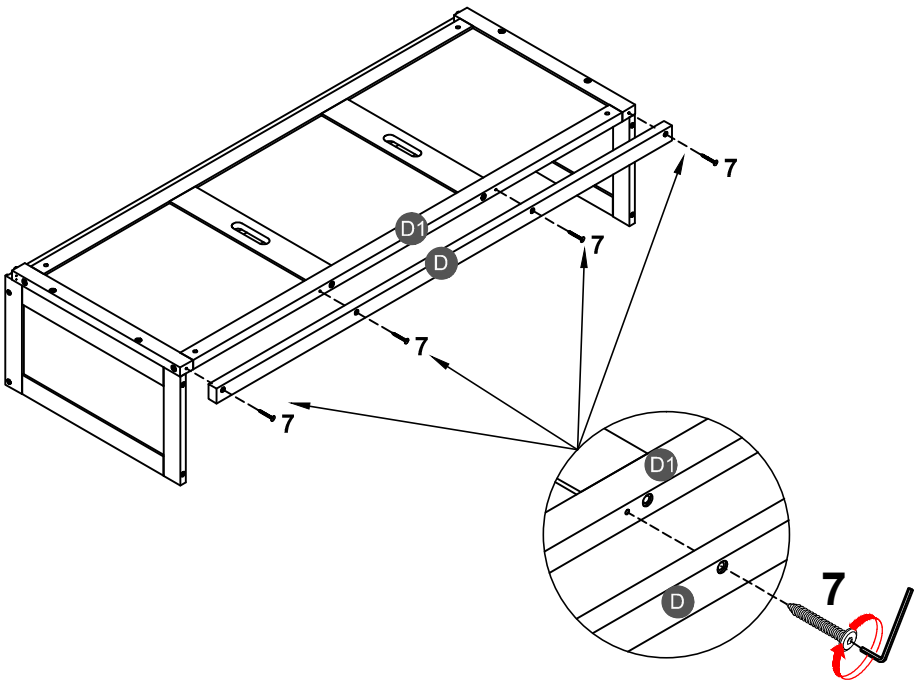

STEP 20:

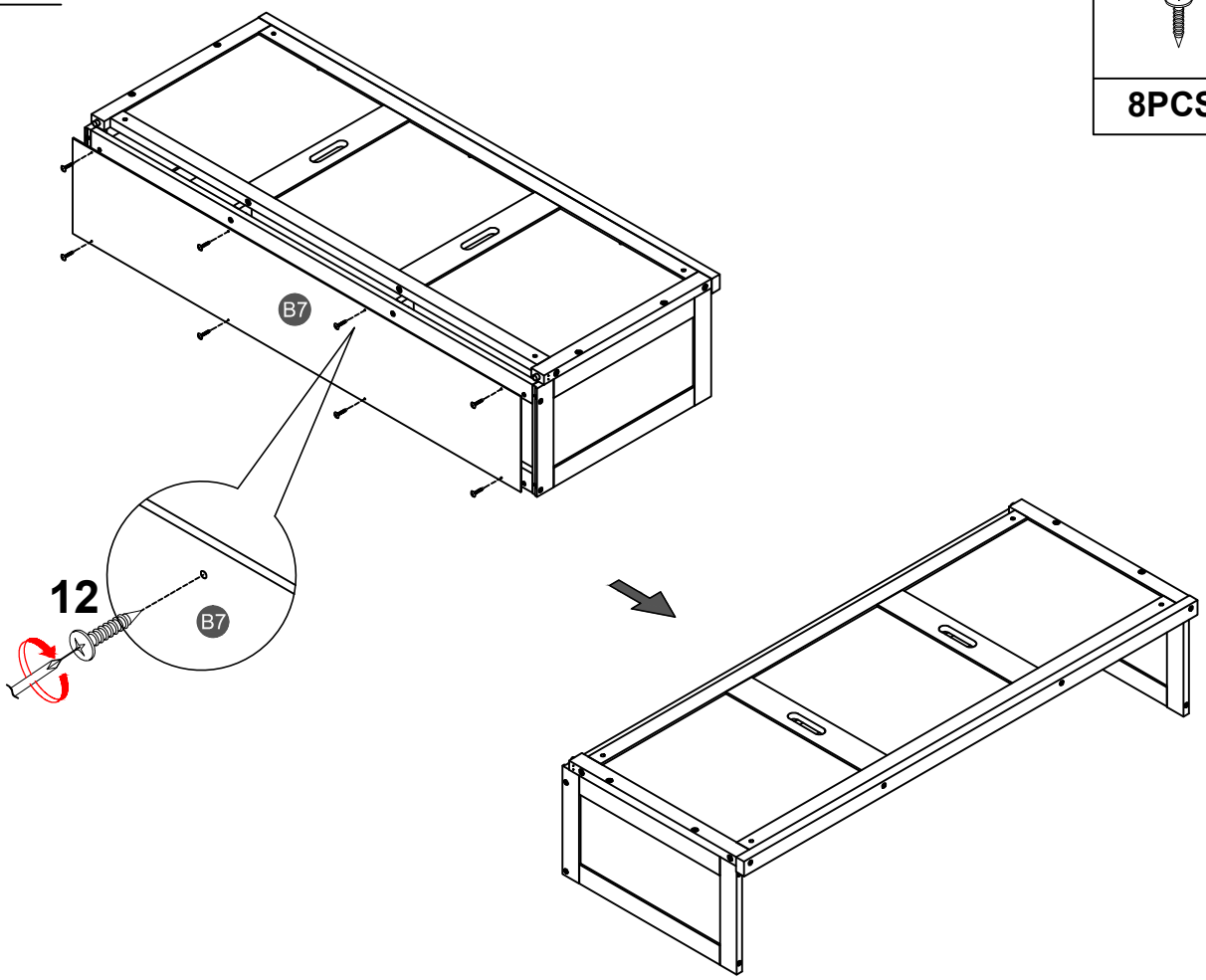

STEP 21:

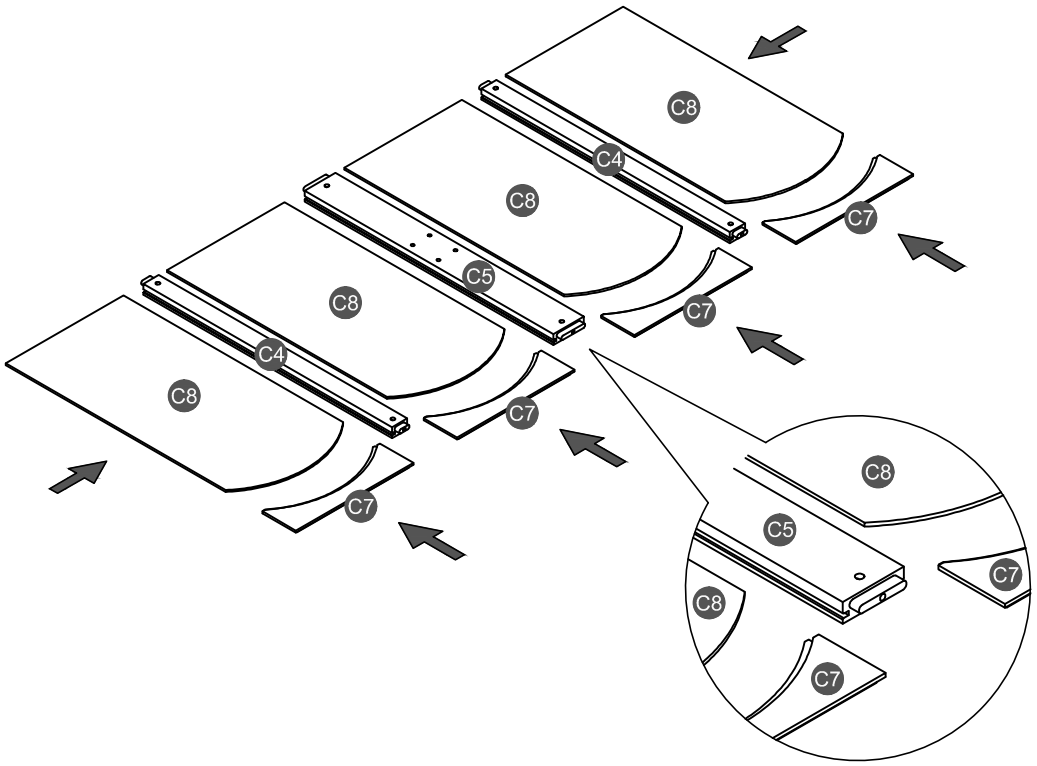

STEP 22:

2	6
16PCS	6PCS

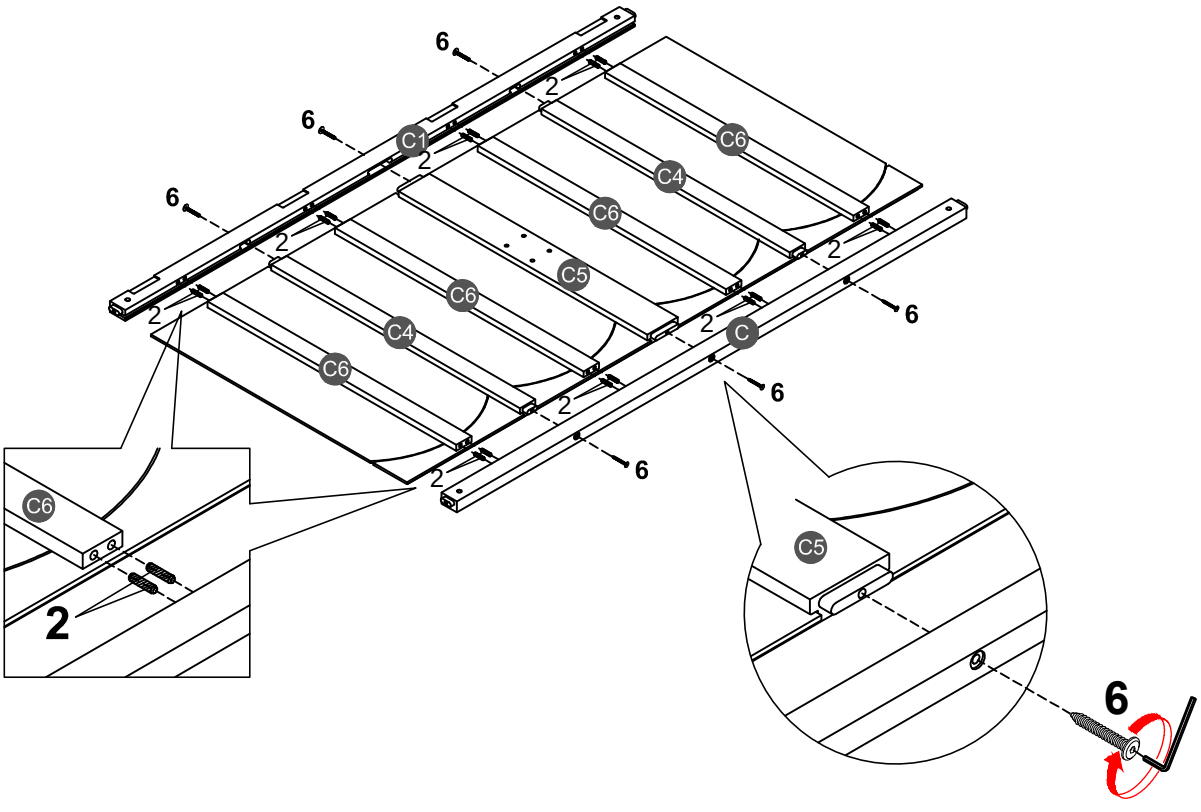

STEP 23:

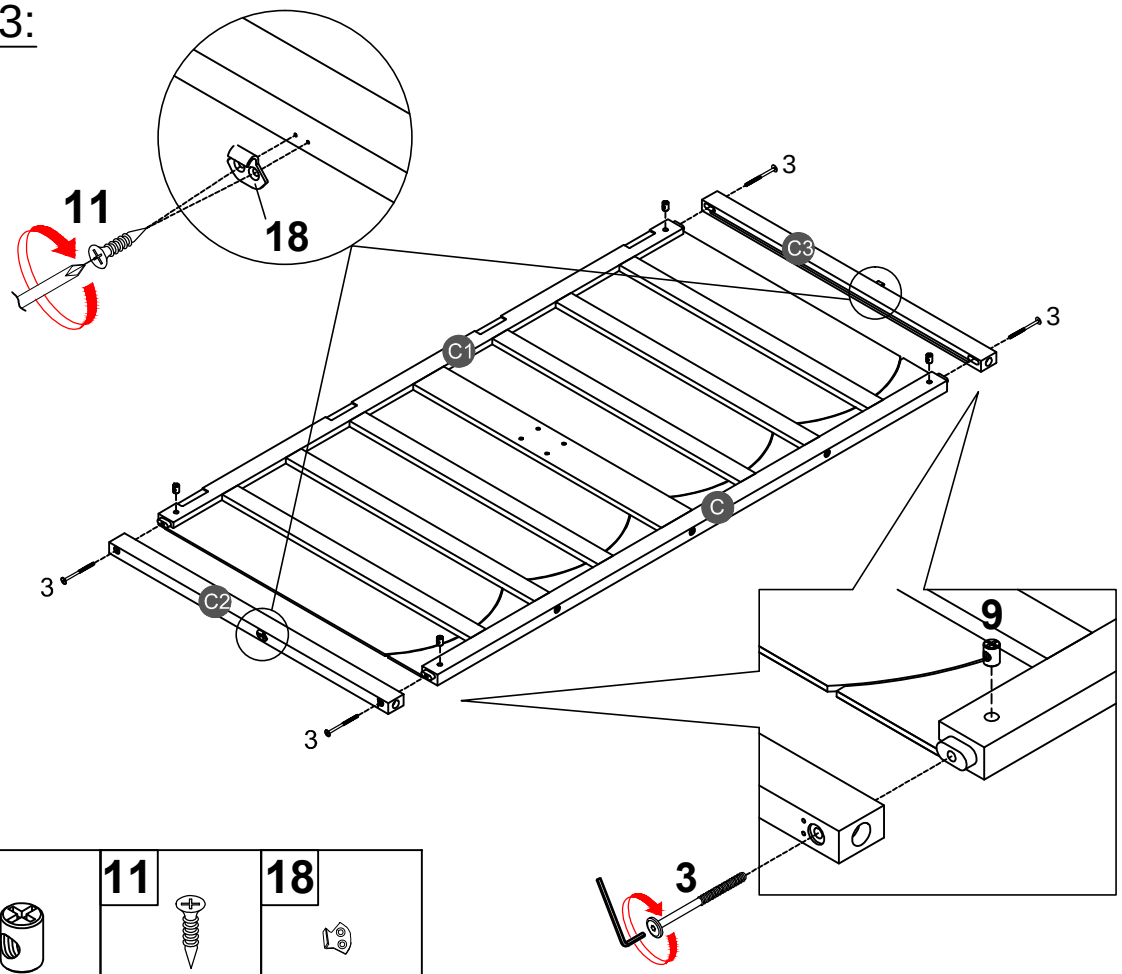

3	9	11	18
4PCS	4PCS	4PCS	2PCS

STEP 24:

19	20
2PCS	4PCS

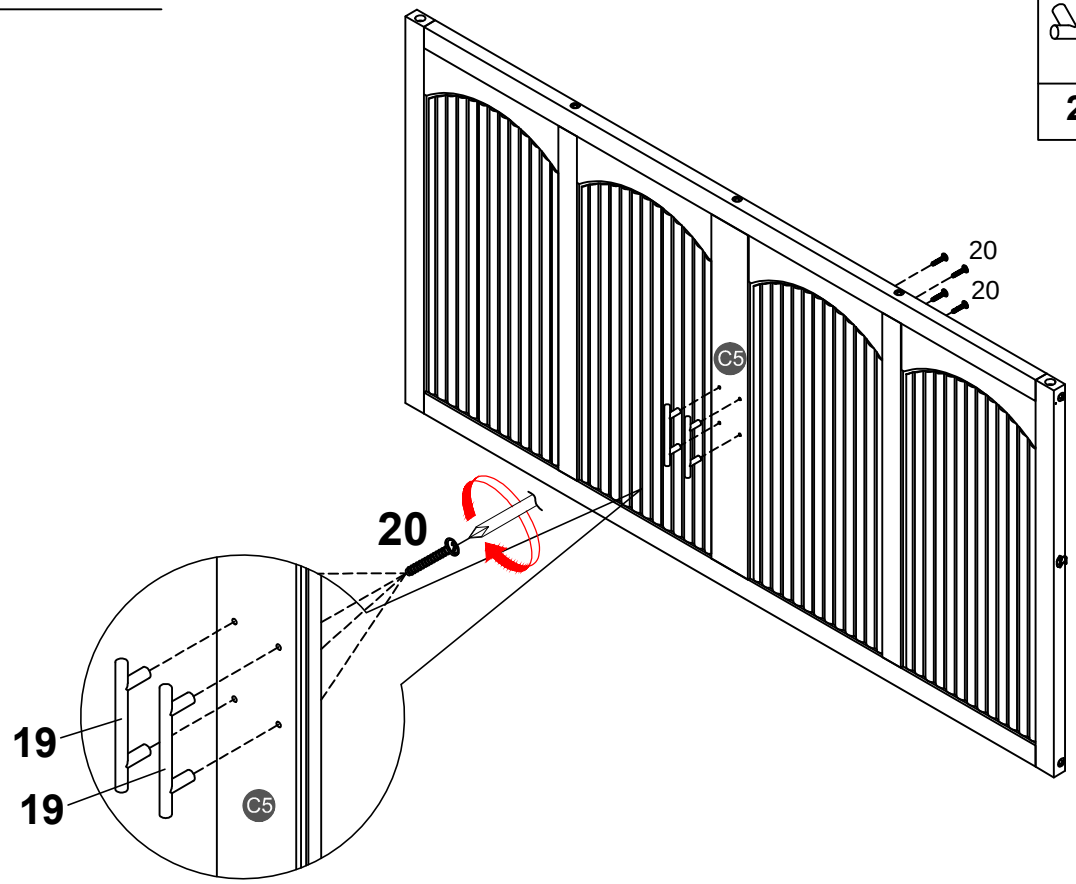

STEP 25:

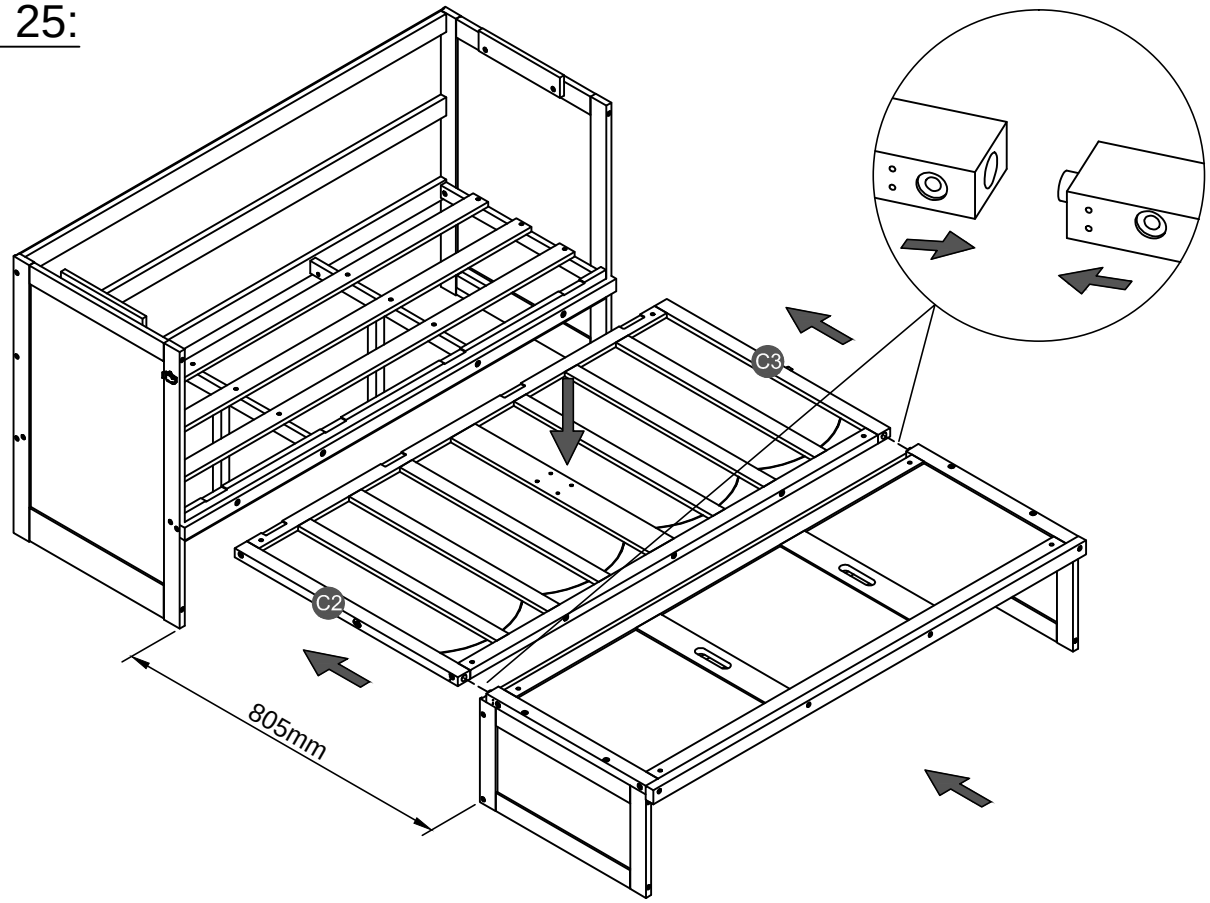

STEP 26:

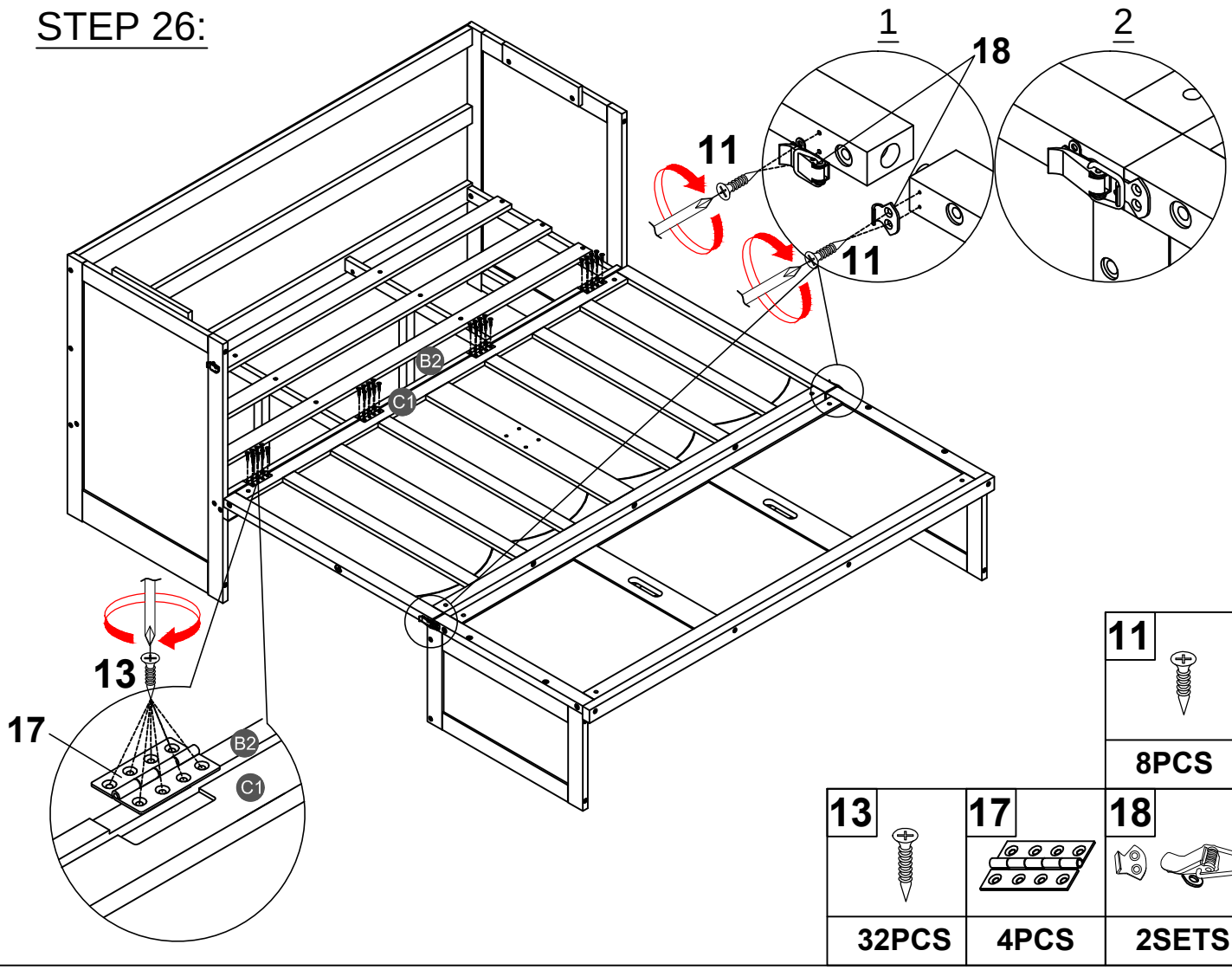

11	13	17	18
8PCS	32PCS	4PCS	2SETS

STEP 27:

2	4	9
6PCS	3PCS	3PCS

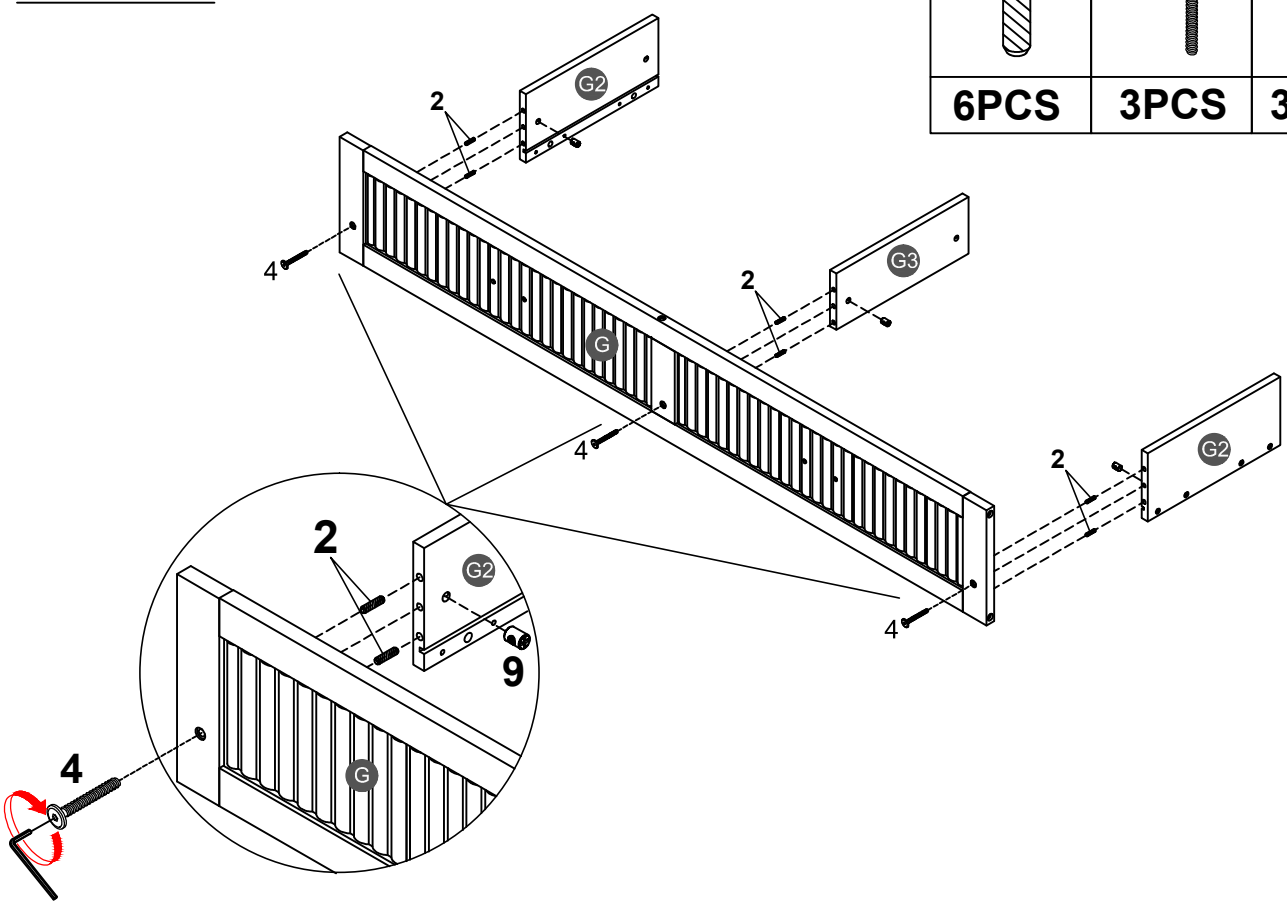

STEP 28:

2	4	9
18PCS	3PCS	3PCS

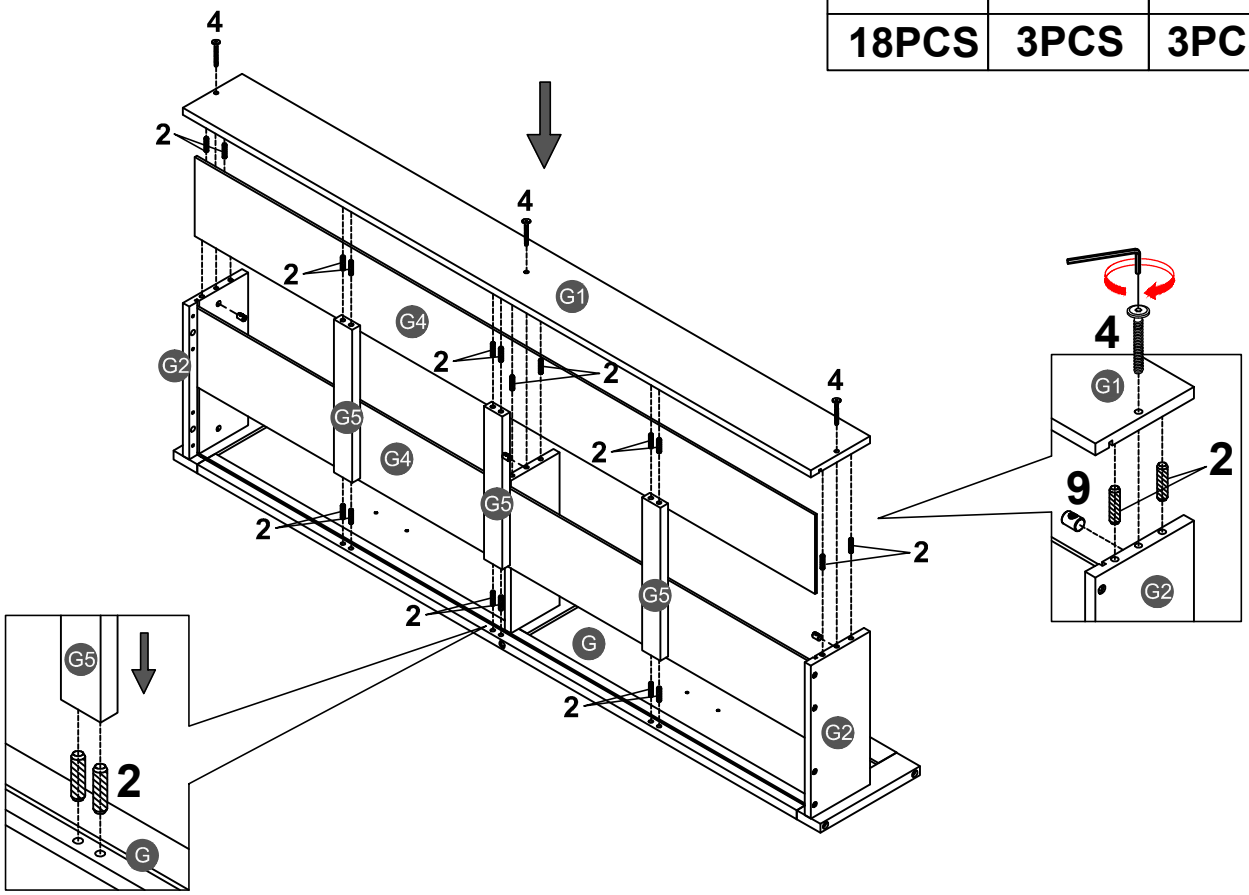

STEP 29:

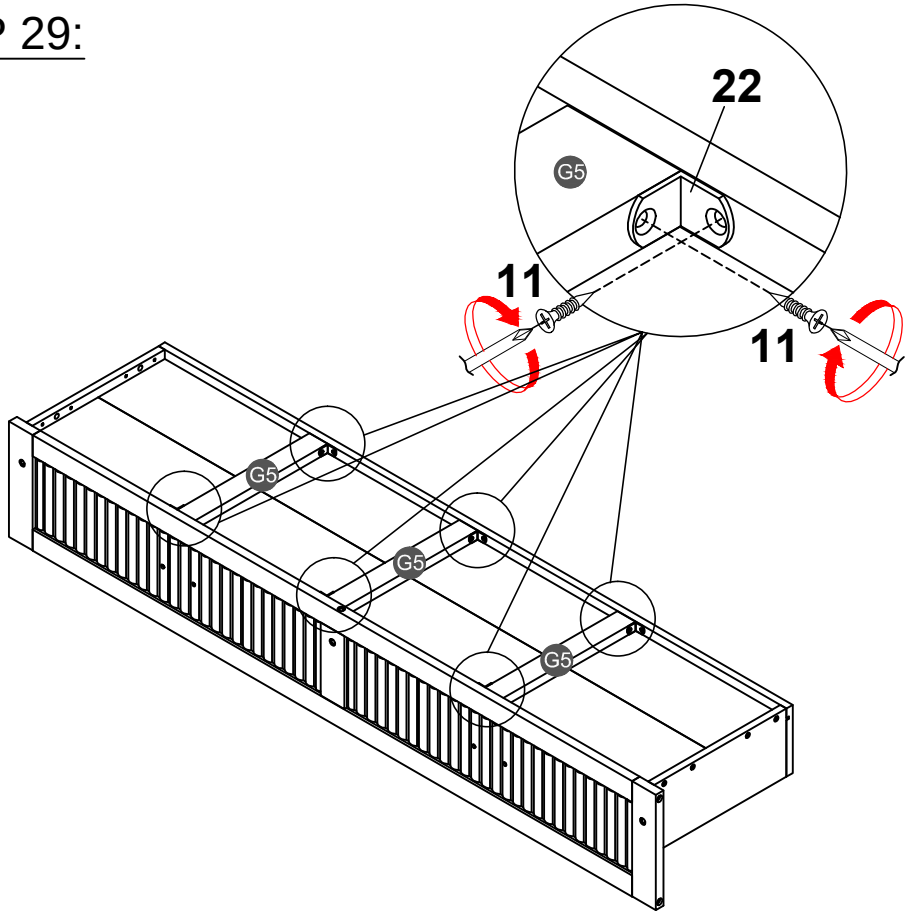

11	22
12PCS	6PCS

STEP 30:

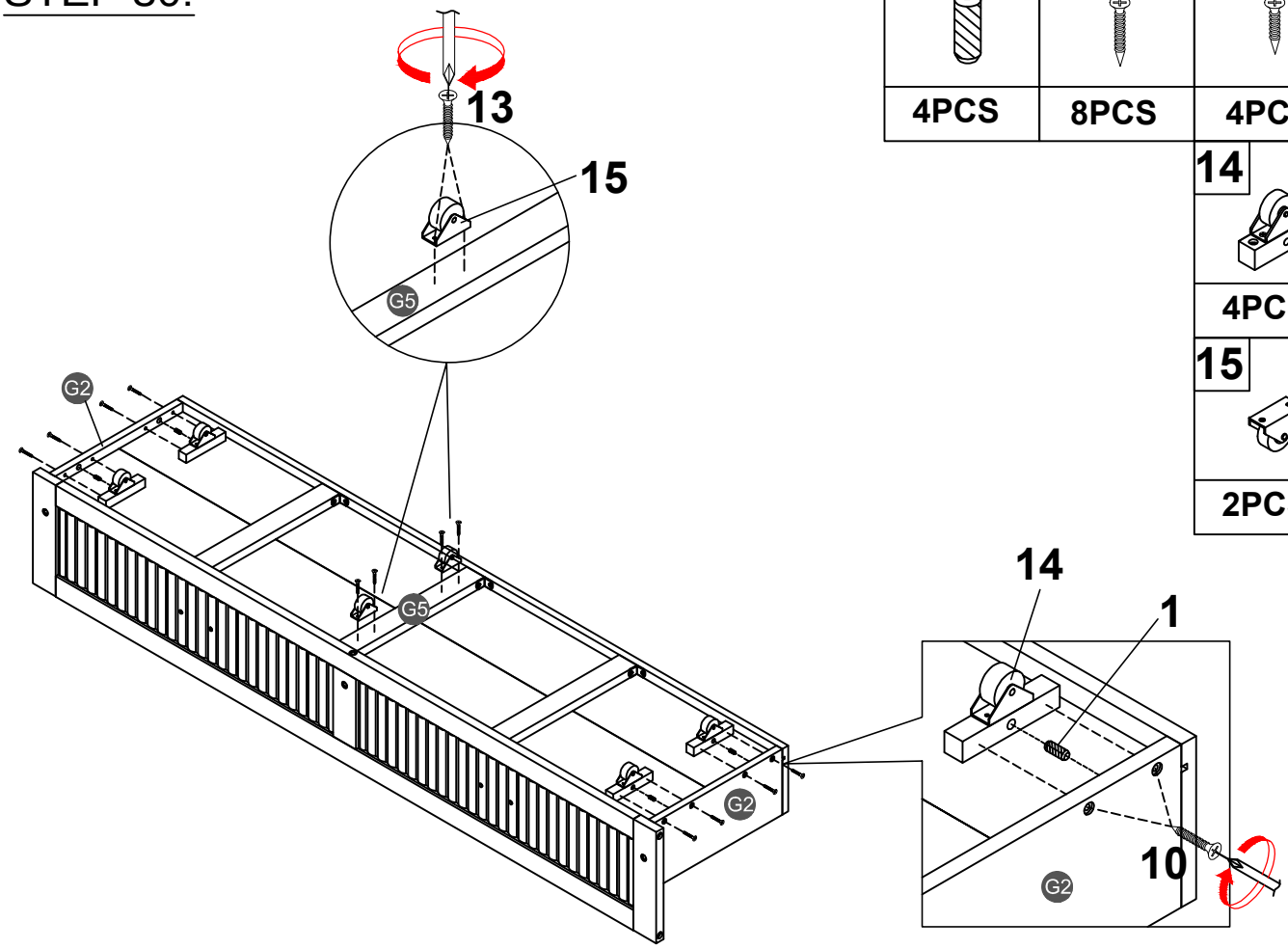

1	10	13
4PCS	8PCS	4PCS

14
4PCS

15
2PCS

STEP 31:

19	20
2PCS	4PCS

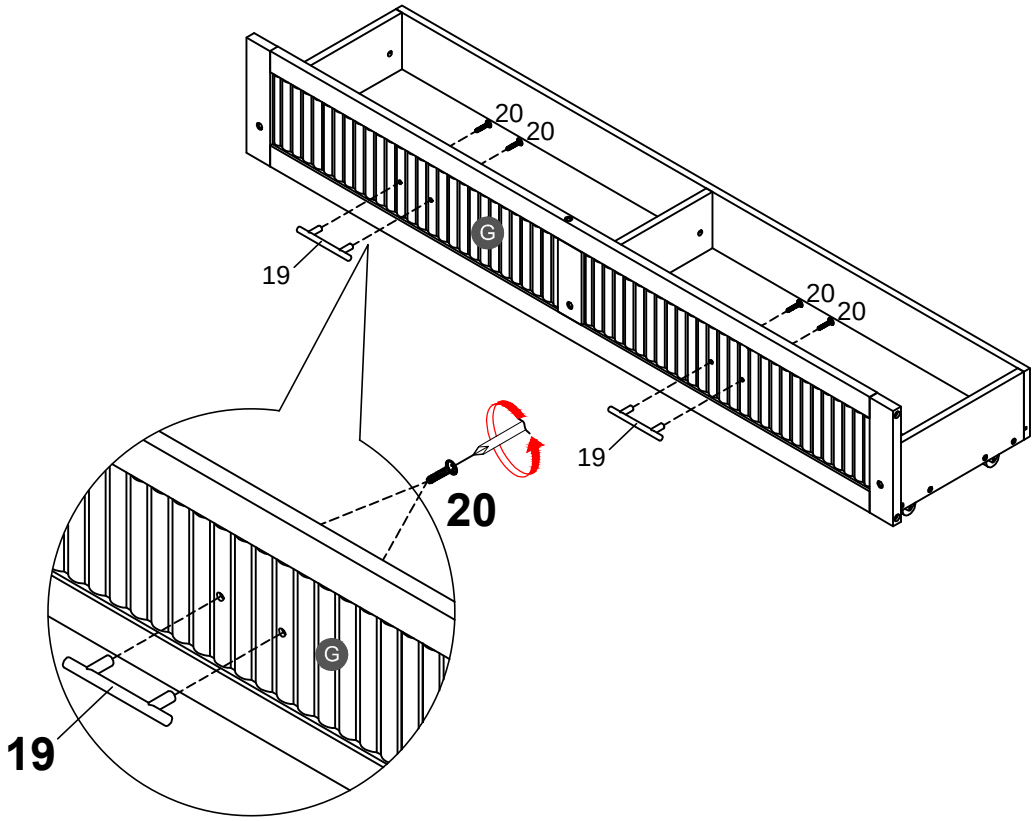

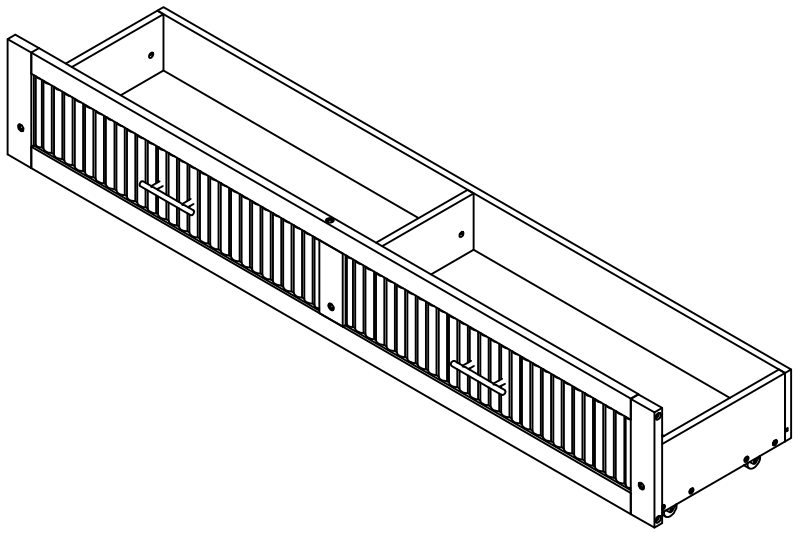

STEP 32:

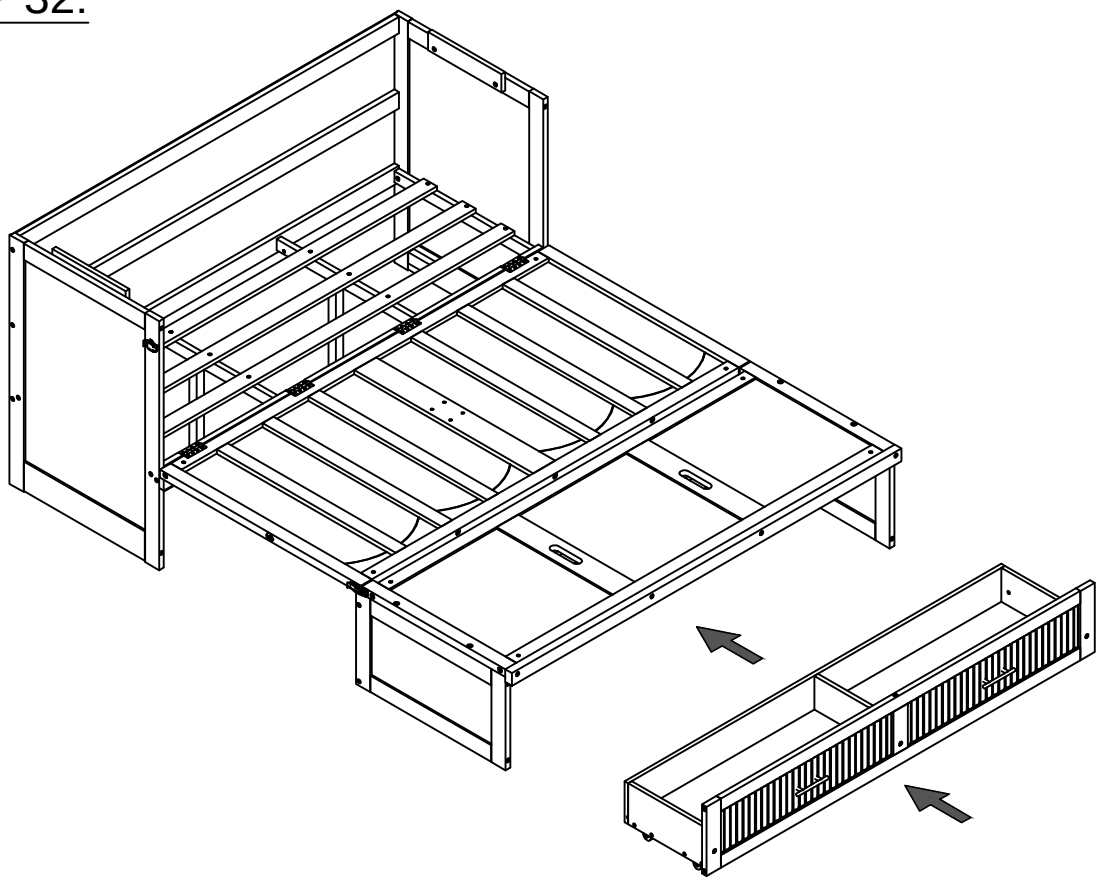

TYPE 1

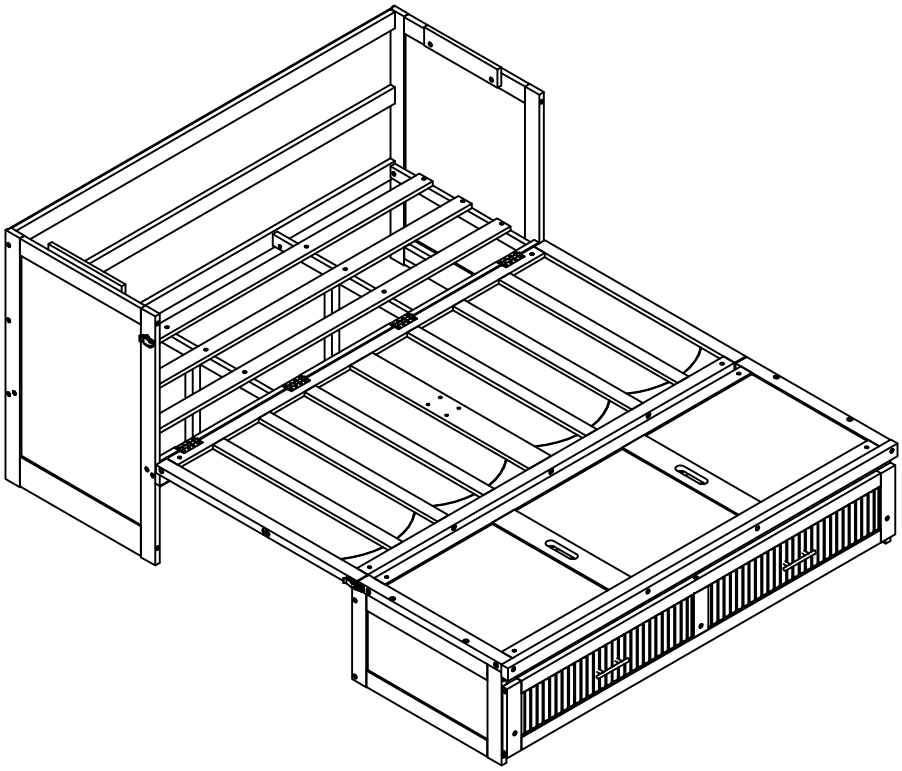

Make sure to tighten all the screws of the bed.

STEP 33:

TYPE 2

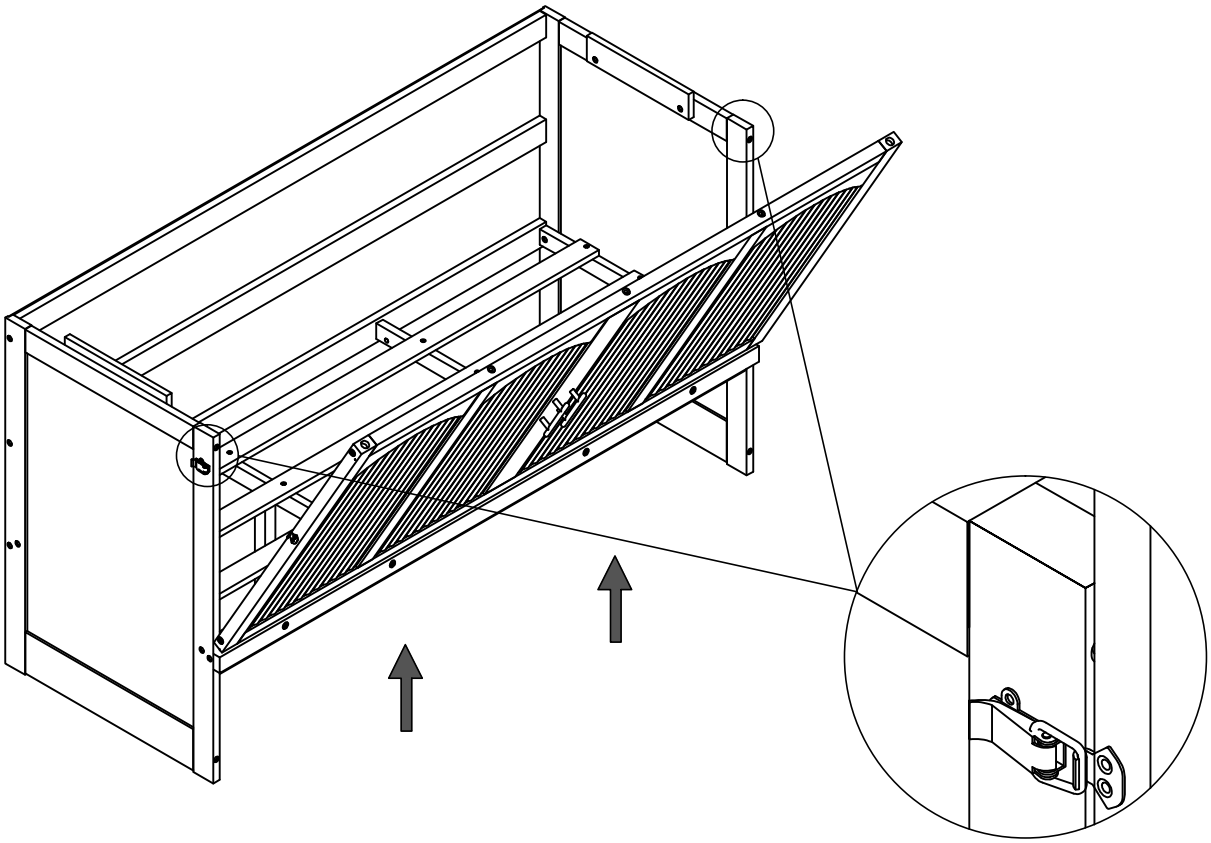

STEP 34:

TYPE 2

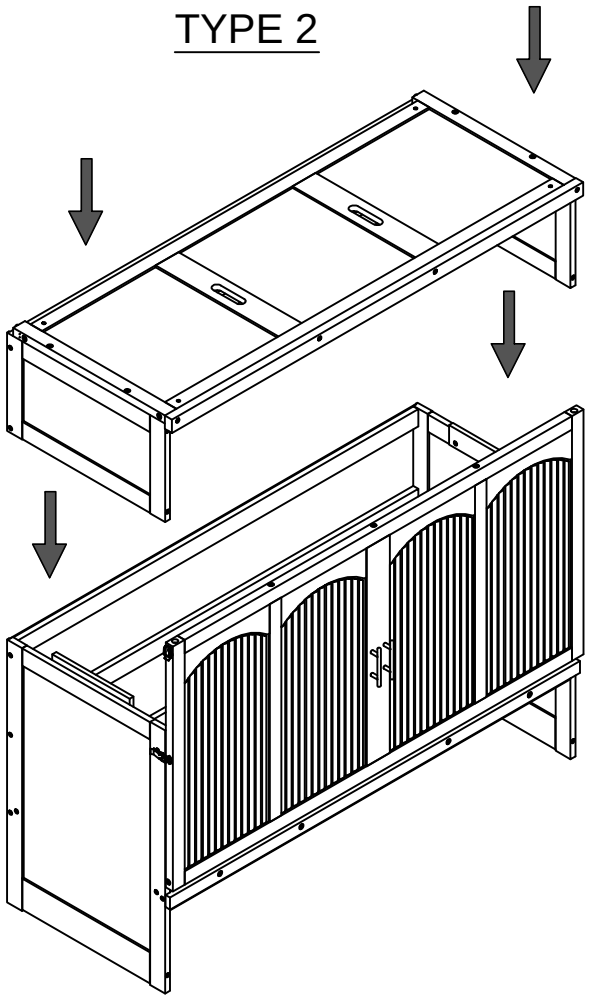

STEP 35:

TYPE 2

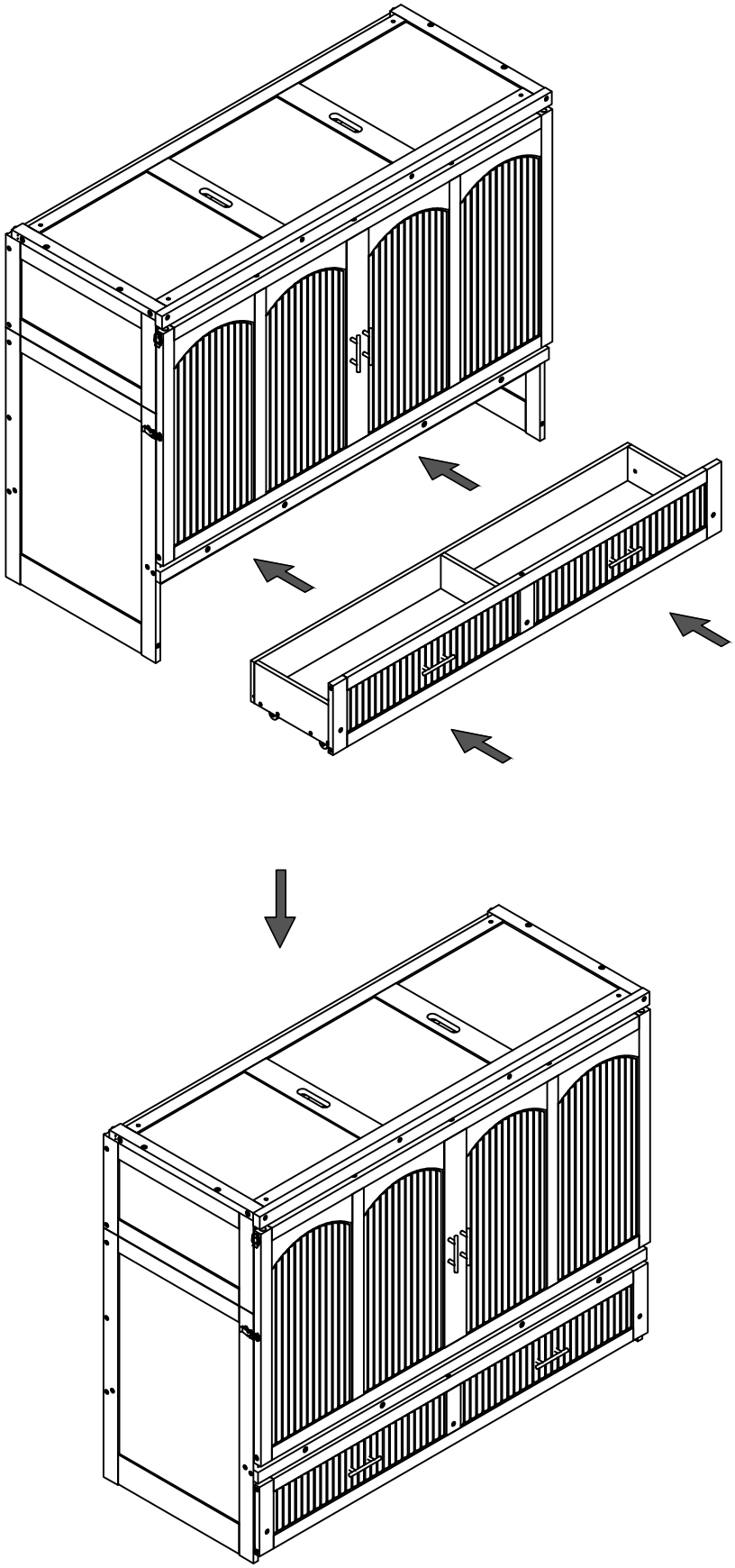

Make sure to tighten all the screws of the bed.

STEP 36:

TYPE 2

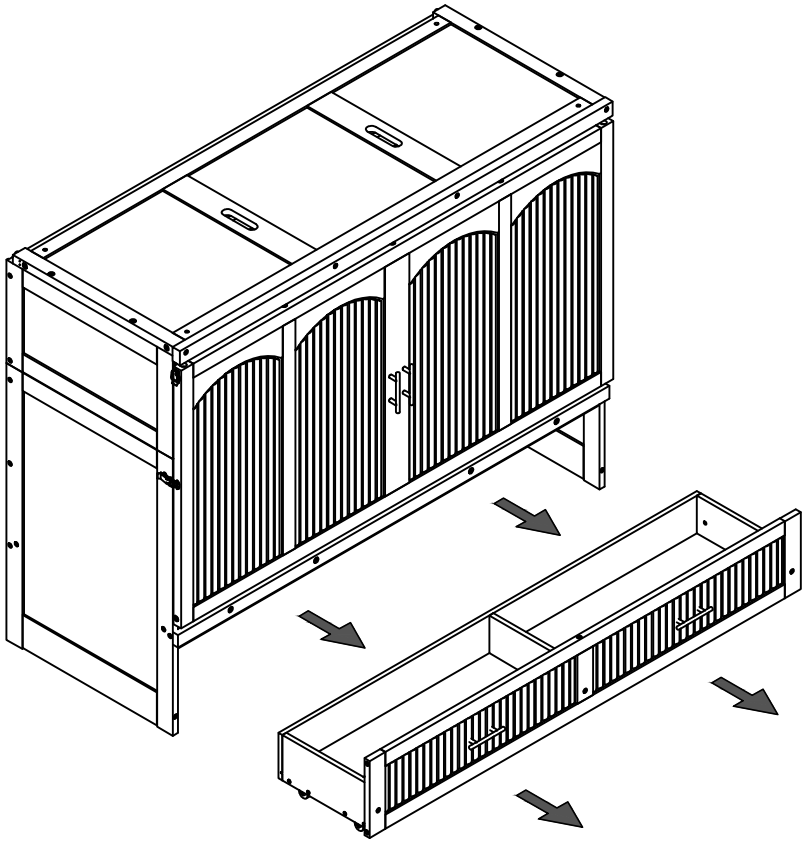

STEP 37:

TYPE 2

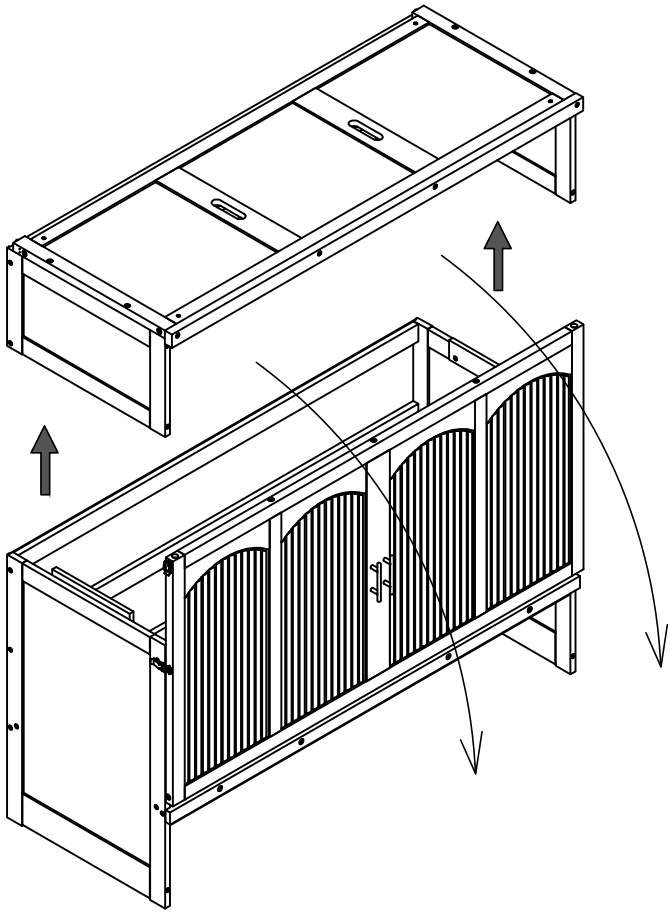

STEP 38:

TYPE 2

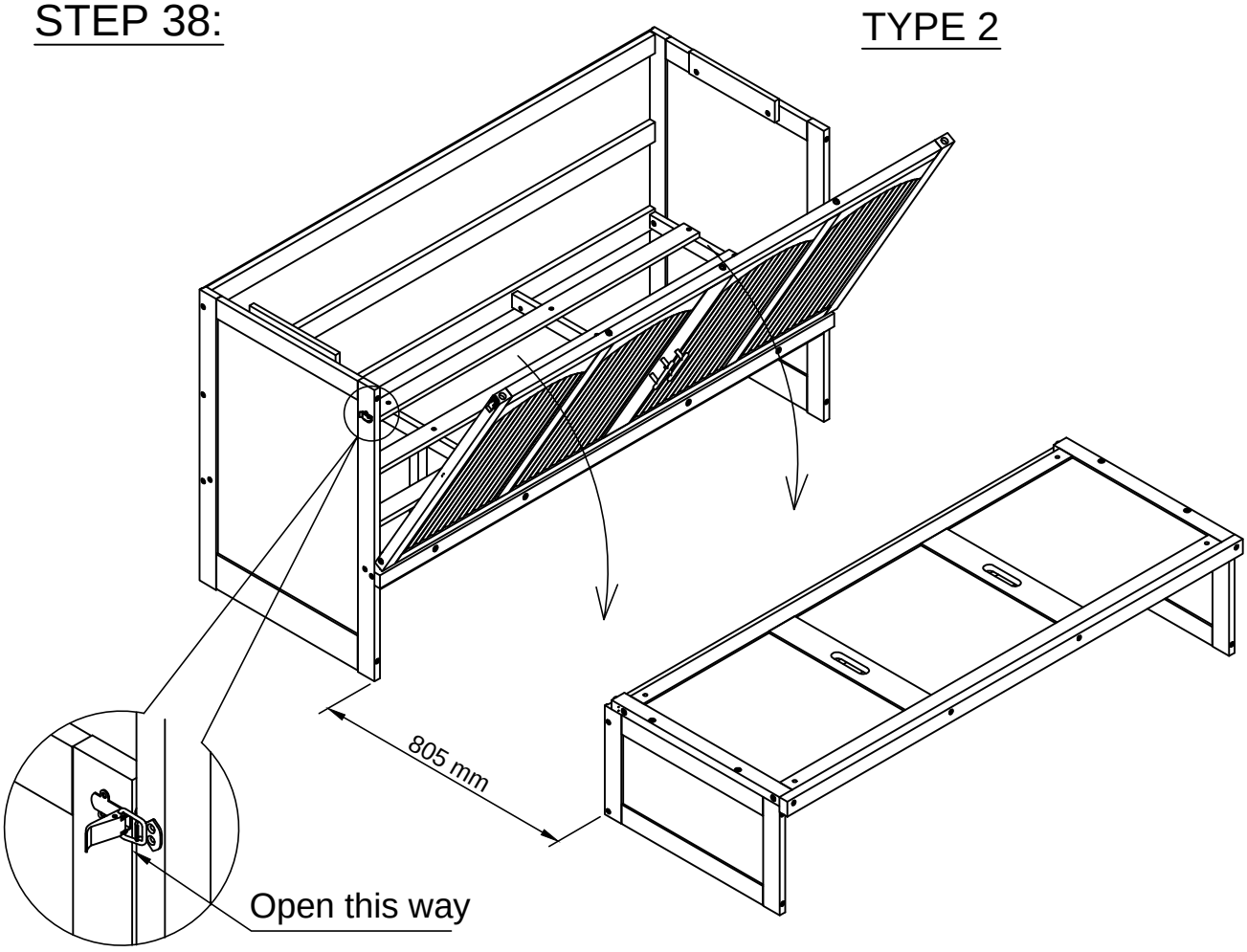

STEP 39:

TYPE 2

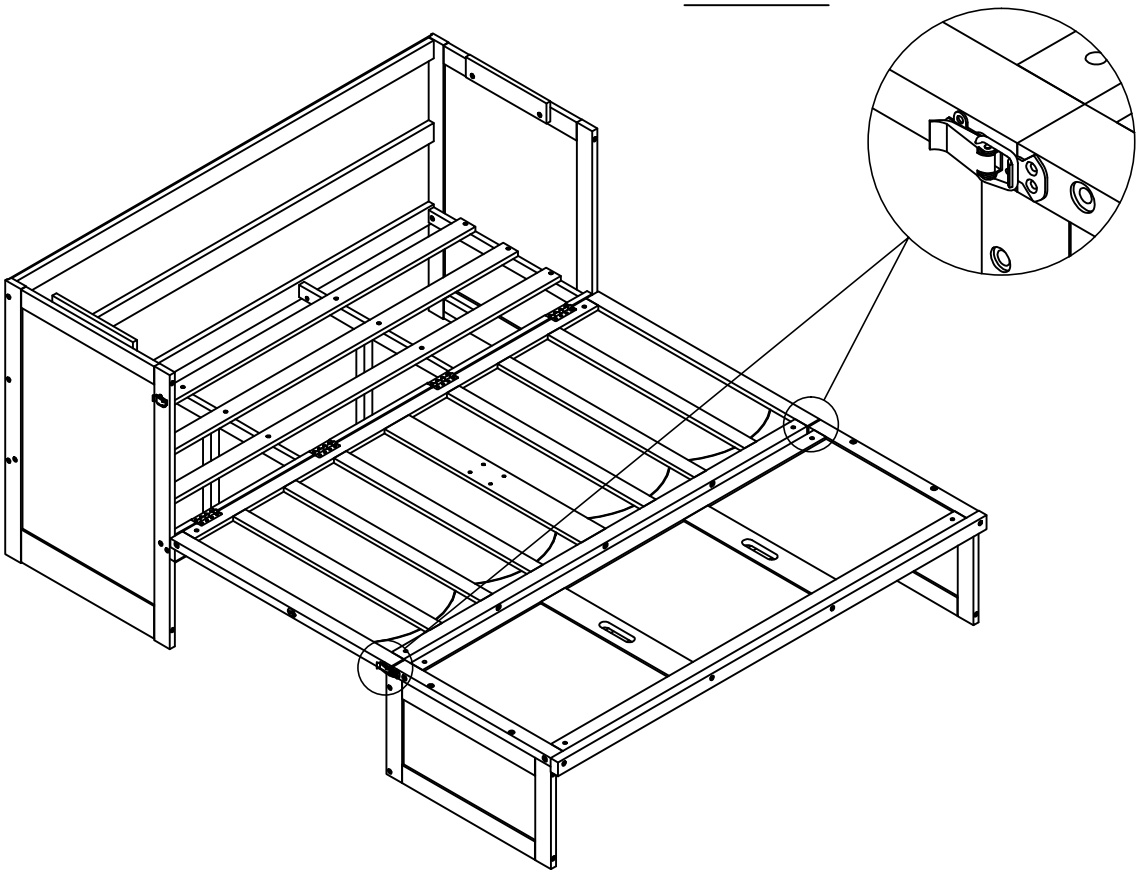

STEP 40:

TYPE 2

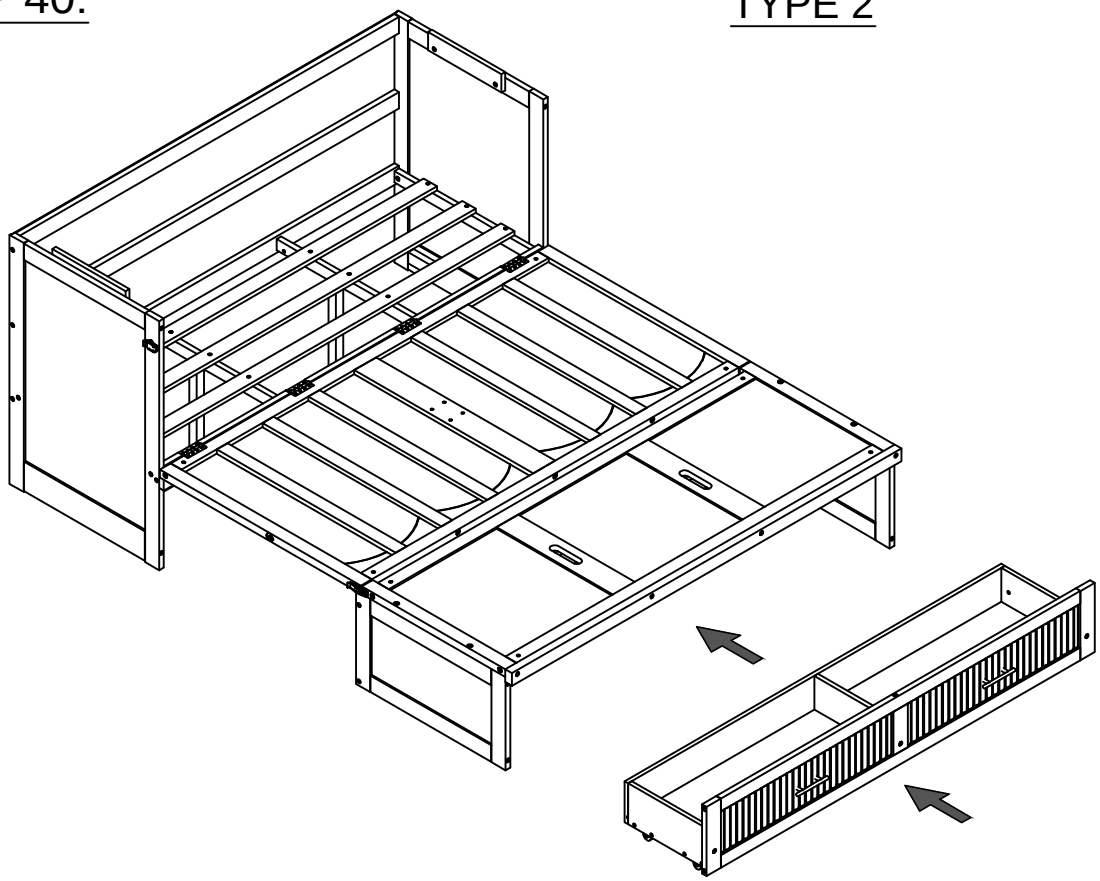

TYPE 2

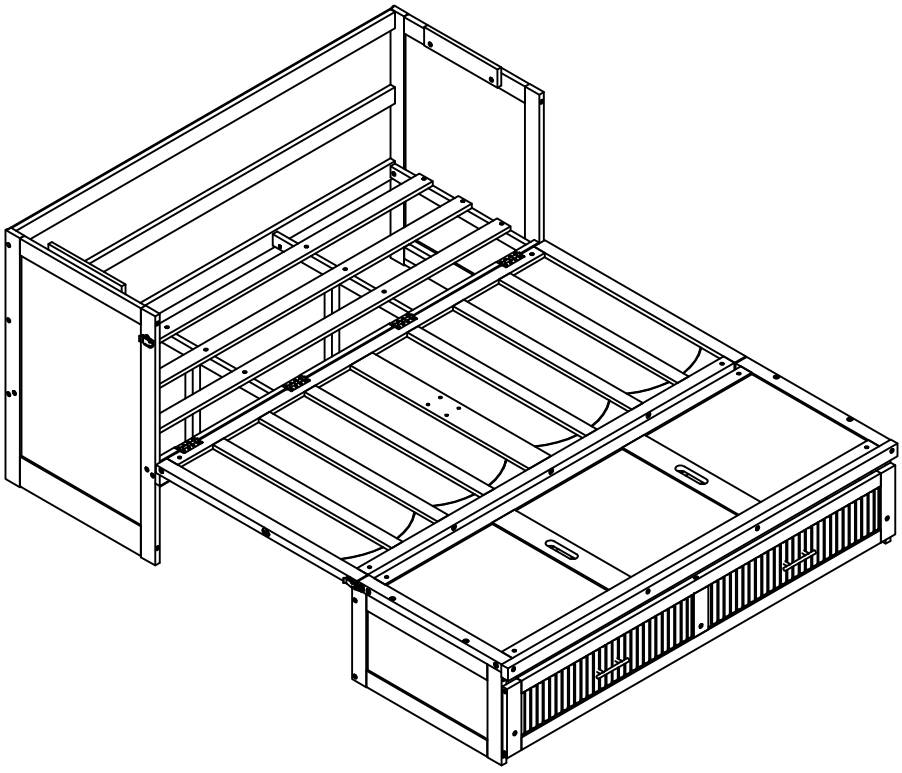

Make sure to tighten all the screws of the bed.

STEP A:

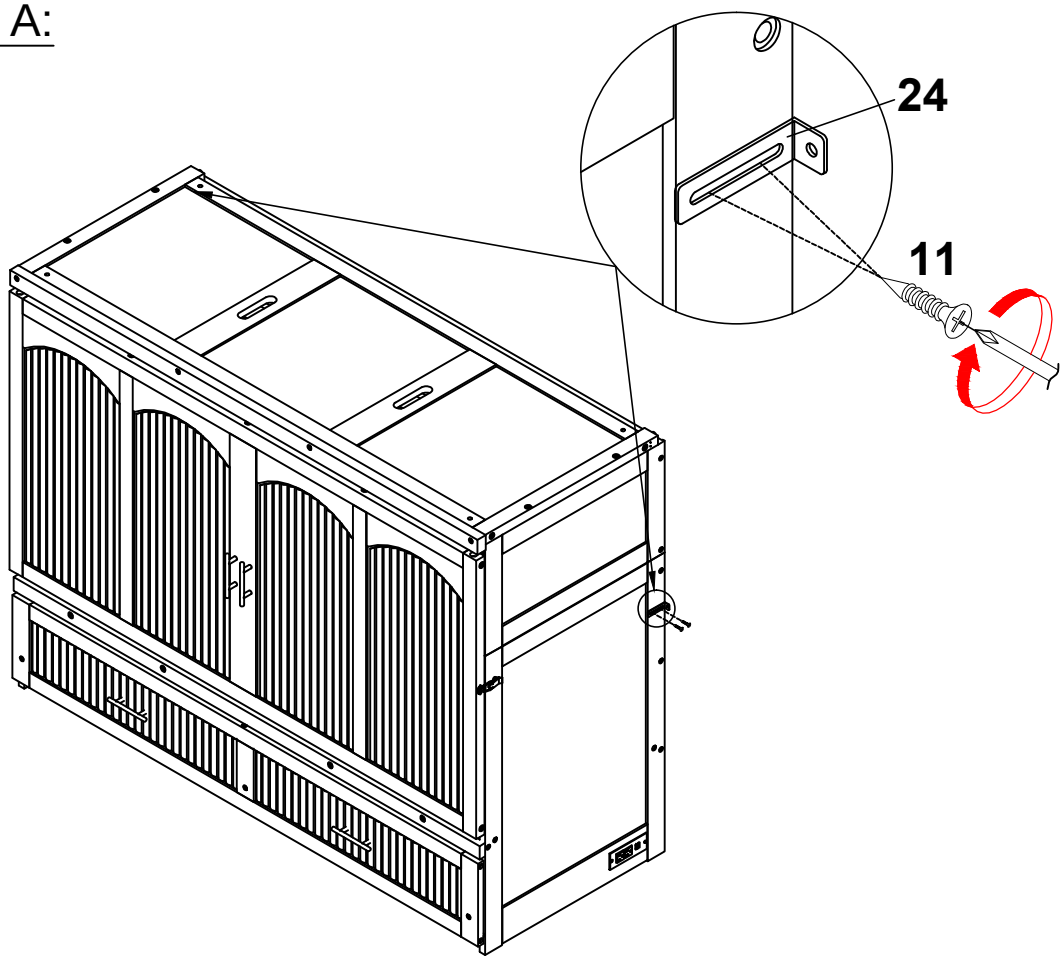

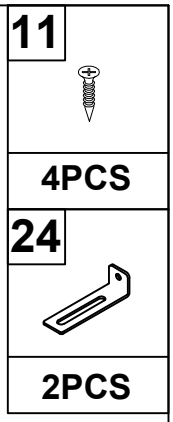

Installing the Anti-Tip Bracket.

STEP B:

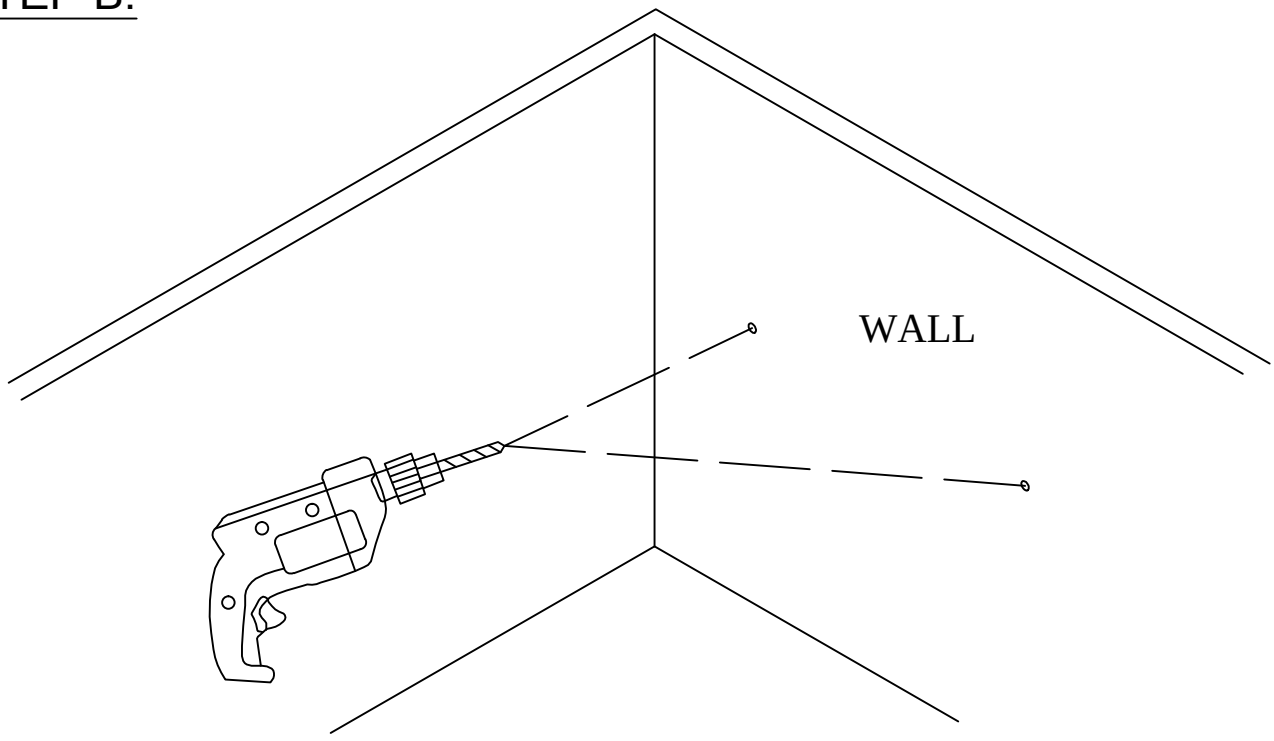

Drill holes in the wall.

STEP C:

23

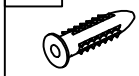

2PCS

Furniture Tipping Restraint
Installation Instrustructions

Parts list
11. Wood screws: 4 pcs
23. Plastic anchor : 2 pcs
24. Bracket : 2 pcs
25. Wood screws : 2 pcs

Address: Kinh Thuan Company, Group 01,
Binh Thuan 2 Quarter, Thuan Giao Ward,
Thuan An City, Binh Duong Province, Vietnam

Phone: 0274 3719 043
Production date :
15/12/2025

IMPORTANT
DO NOT allow children to climb on the furniture.
DO NOT place a TV or other heavy objects on the top of this product.
DO NOT place heavy objects in upper drawers.
DO NOT let children pull out drawers or hang on drawers, doors or shelves.
DO NOT open more than one drawer at a time.

INSTALLATION
Installation of the tipping restraint will secure the unit to the wall with the hardware provided and prevent the possibility of the unit tipping over. This restraint is only an added safety precaution and is not a substitute for proper adult supervision.

Tap plastic anchor in with a hammer or mallet.

STEP D:

25

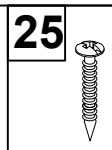

2PCS

Fix the bracket to the wall with screw.

