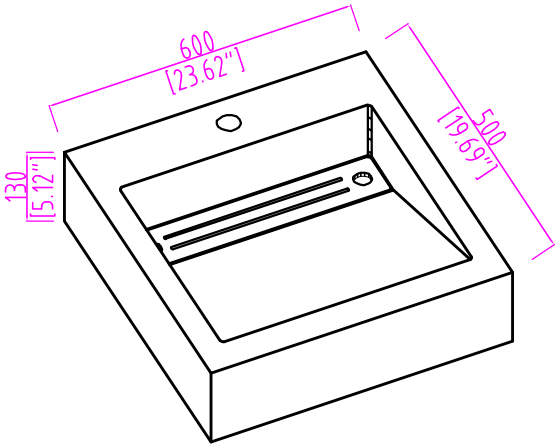
600
[23.62"]
500
[19.69"]
130
[5.12"]

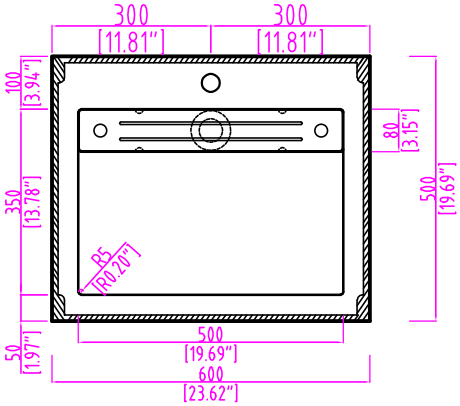
300
[11.81"]
300
[11.81"]
100
[3.94"]
350
[13.78"]
50
[1.97"]
80
[3.15"]
500
[19.69"]
R5
[R0.20"]
500
[19.69"]
600
[23.62"]

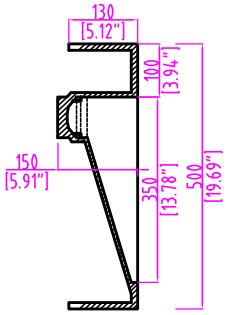
130
[5.12"]
100
[3.94"]
150
[5.91"]
350
[13.78"]
500
[19.69"]

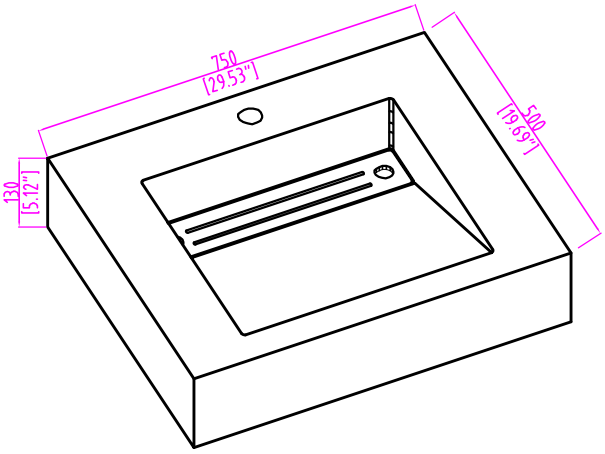
750
[29.53"]
500
[19.69"]
130
[5.12"]

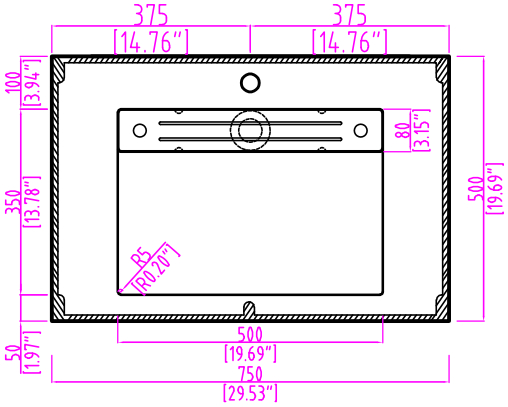
375
[14.76"]
375
[14.76"]
100
[3.94"]
350
[13.78"]
50
[1.97"]
80
[3.15"]
500
[19.69"]
R5
[R0.20"]
500
[19.69"]
750
[29.53"]

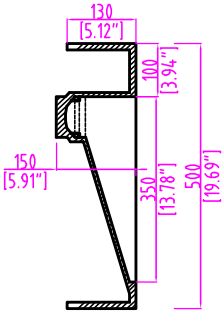
130
[5.12"]
100
[3.94"]
150
[5.91"]
350
[13.78"]
500
[19.69"]

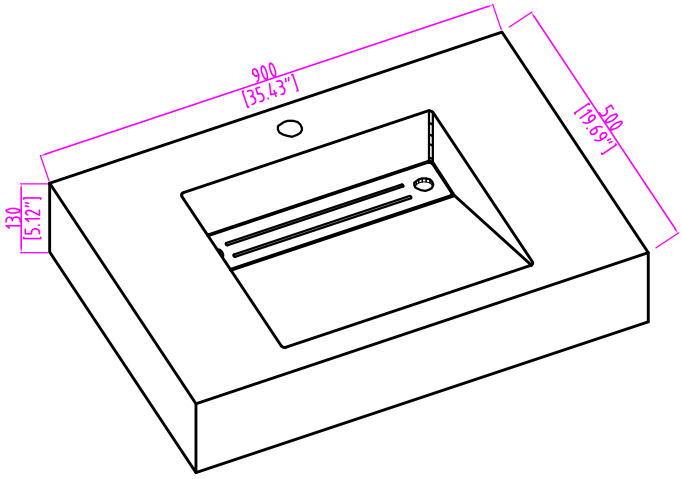
900
[35.43"]
500
[19.69"]
130
[5.12"]

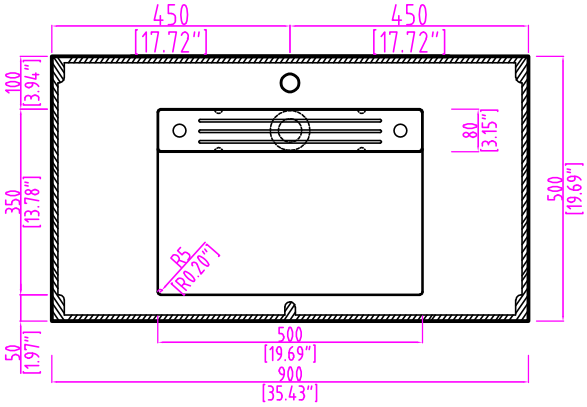
450
[17.72"]
450
[17.72"]
100
[3.94"]
350
[13.78"]
50
[1.97"]
80
[3.15"]
500
[19.69"]
R5
[R0.20"]
500
[19.69"]
900
[35.43"]

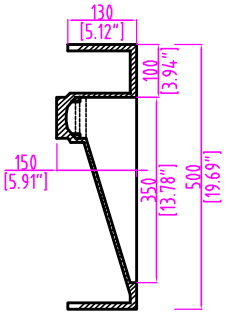
130
[5.12"]
100
[3.94"]
150
[5.91"]
350
[13.78"]
500
[19.69"]

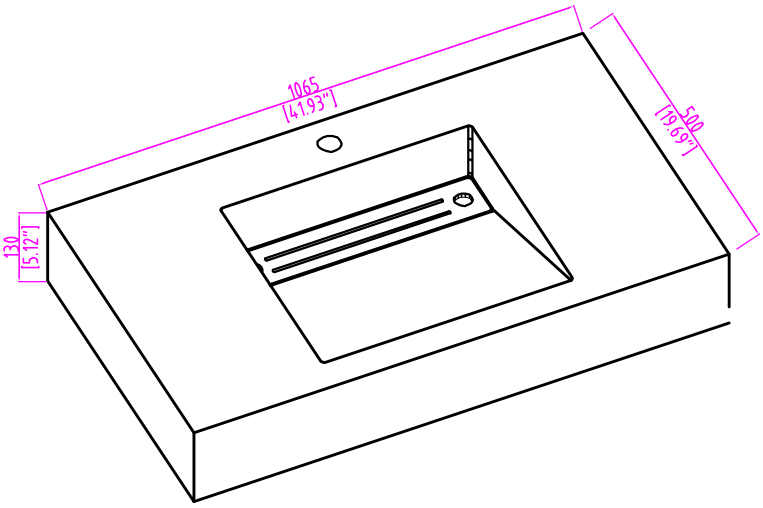
1065
[41.93"]
500
[19.69"]
130
[5.12"]

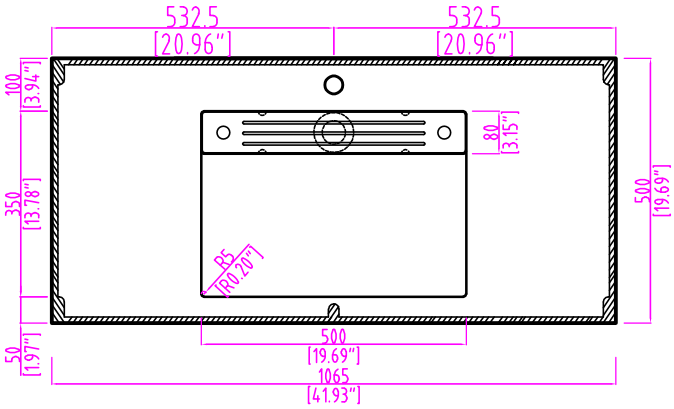
532.5
[20.96"]
532.5
[20.96"]
100
[3.94"]
350
[13.78"]
50
[1.97"]
80
[3.15"]
500
[19.69"]
R5
[R0.20"]
500
[19.69"]
1065
[41.93"]

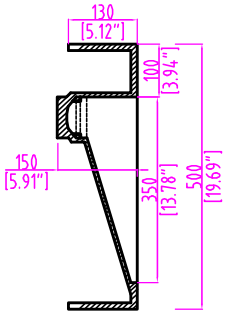
130
[5.12"]
100
[3.94"]
150
[5.91"]
350
[13.78"]
500
[19.69"]

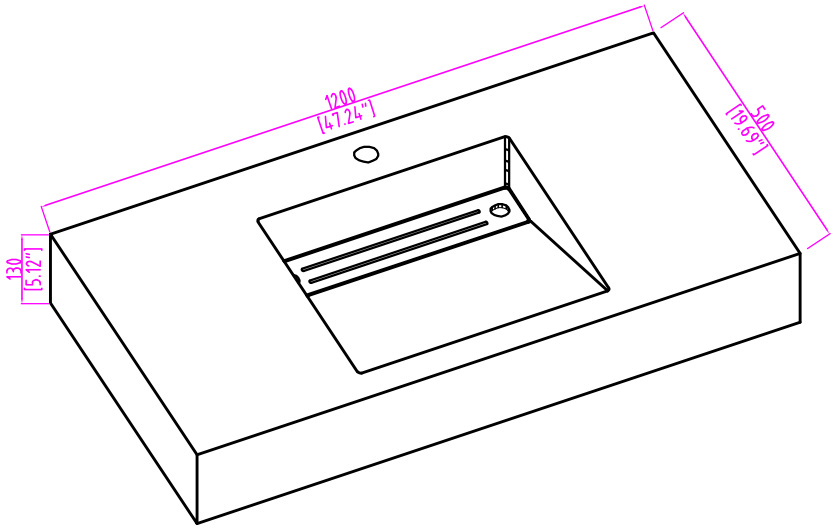
1200
[47.24"]
500
[19.69"]
130
[5.12"]

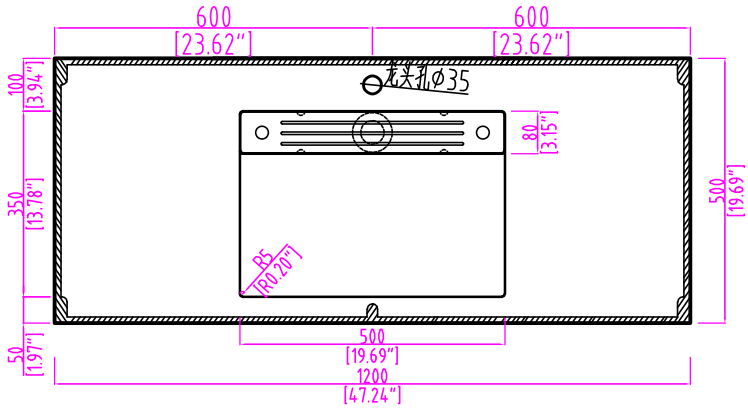
600
[23.62"]
600
[23.62"]
龙头孔Ø35
100
[3.94"]
80
[3.15"]
350
[13.78"]
500
[19.69"]
R5
[R0.20"]
50
[1.97"]
500
[19.69"]
1200
[47.24"]

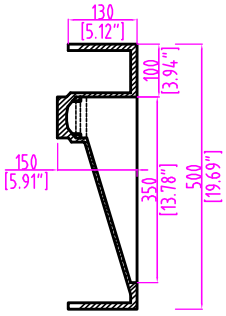
130
[5.12"]
100
[3.94"]
150
[5.91"]
350
[13.78"]
500
[19.69"]

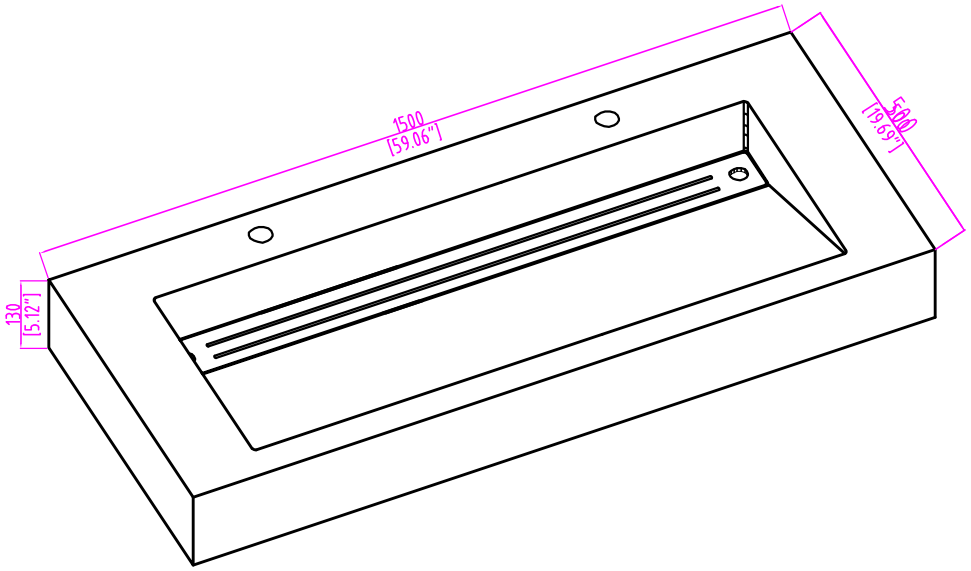
1500
[59.06"]
500
[19.69"]
130
[5.12"]

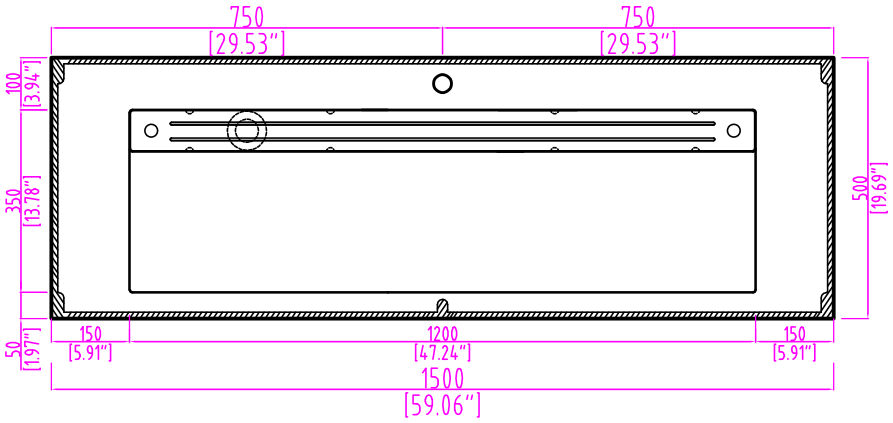
750
[29.53"]
750
[29.53"]
100
[3.94"]
350
[13.78"]
50
[1.97"]
500
[19.69"]
150
[5.91"]
1200
[47.24"]
150
[5.91"]
1500
[59.06"]

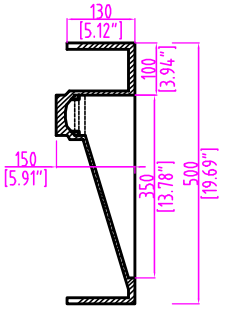
130
[5.12"]
100
[3.94"]
150
[5.91"]
350
[13.78"]
500
[19.69"]

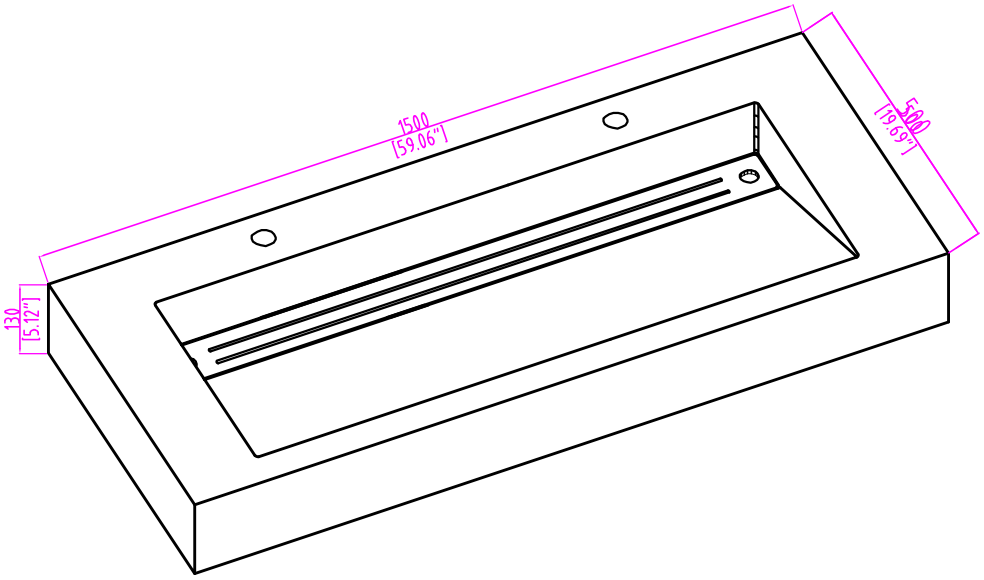
1500
[59.06"]
500
[19.69"]
130
[5.12"]

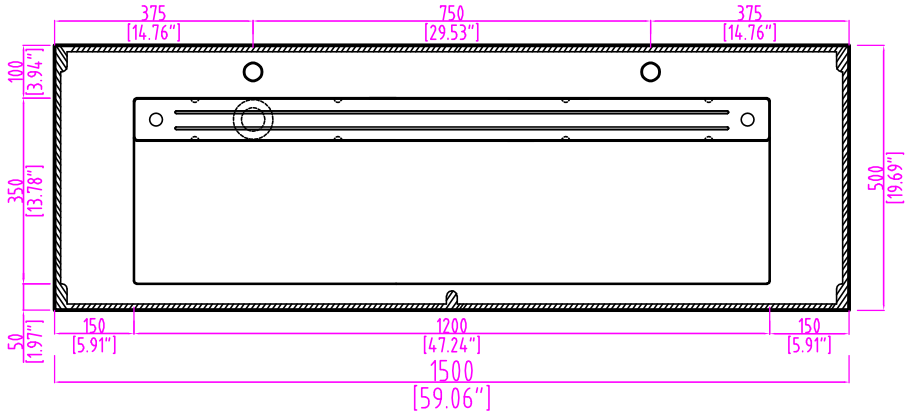
375
[14.76"]
750
[29.53"]
375
[14.76"]
100
[3.94"]
350
[13.78"]
50
[1.97"]
500
[19.69"]
150
[5.91"]
1200
[47.24"]
150
[5.91"]
1500
[59.06"]

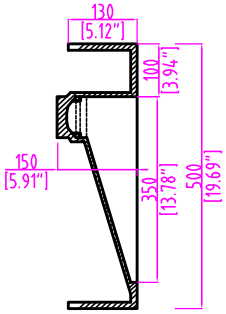
130
[5.12"]
100
[3.94"]
150
[5.91"]
350
[13.78"]
500
[19.69"]

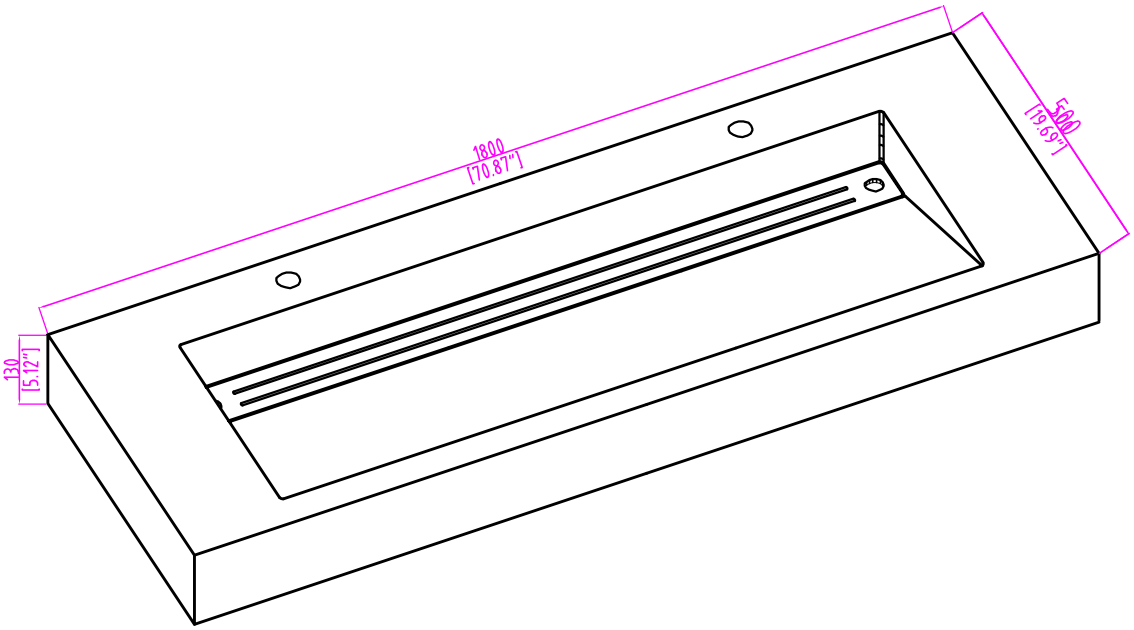
1800
[70.87"]
500
[19.69"]
130
[5.12"]

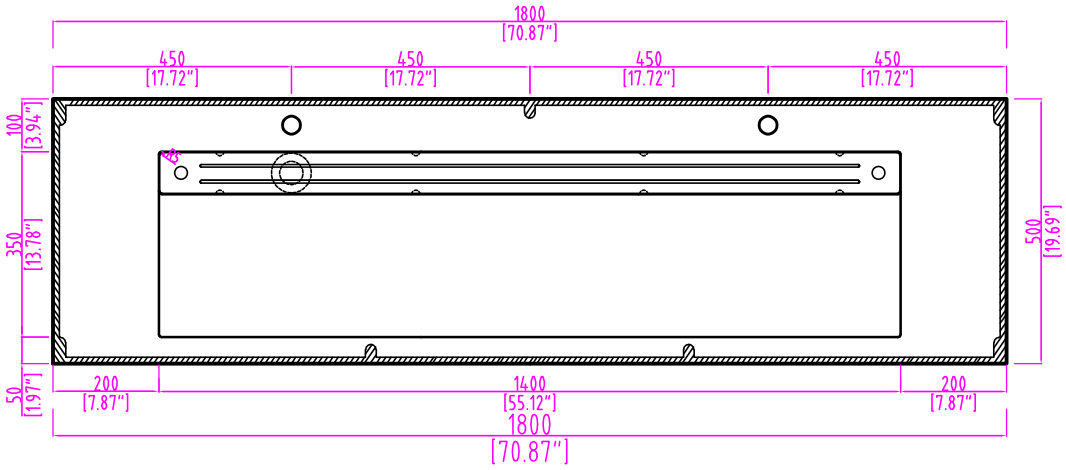
1800
[70.87"]
450
[17.72"]
450
[17.72"]
450
[17.72"]
450
[17.72"]
100
[3.94"]
350
[13.78"]
50
[1.97"]
500
[19.69"]
200
[7.87"]
1400
[55.12"]
200
[7.87"]
1800
[70.87"]

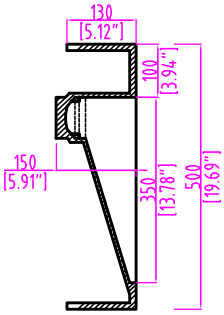
130
[5.12"]
100
[3.94"]
150
[5.91"]
350
[13.78"]
500
[19.69"]

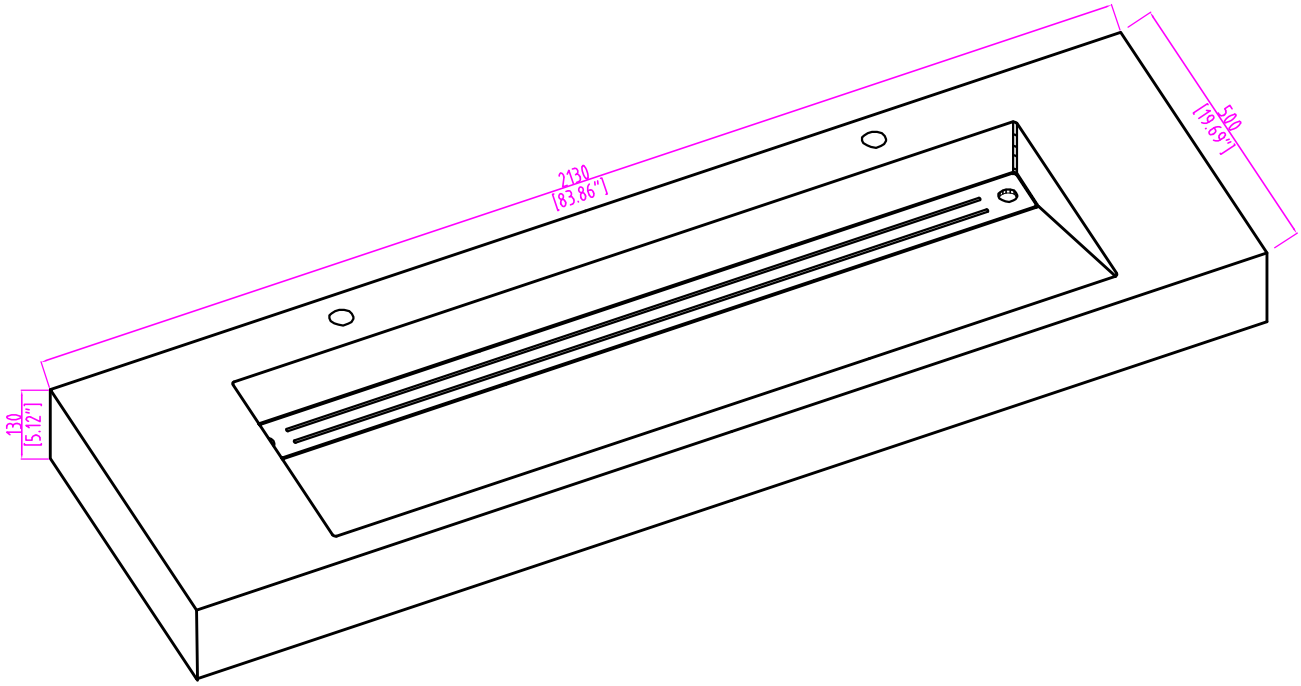
2130
[83.86"]
500
[19.69"]
130
[5.12"]

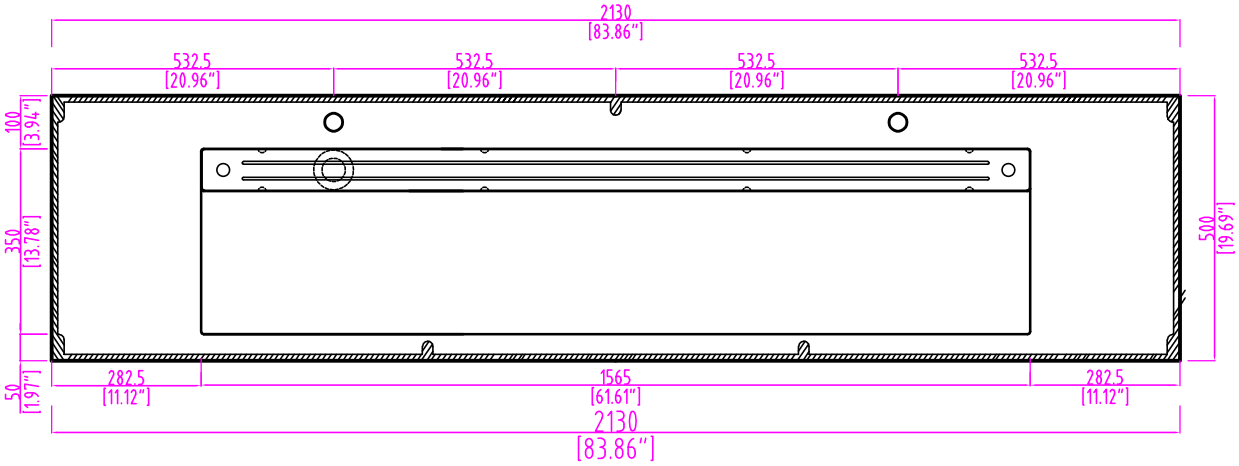
2130
[83.86"]
532.5
[20.96"]
532.5
[20.96"]
532.5
[20.96"]
532.5
[20.96"]
100
[3.94"]
350
[13.78"]
50
[1.97"]
500
[19.69"]
282.5
[11.12"]
1565
[61.61"]
282.5
[11.12"]
2130
[83.86"]

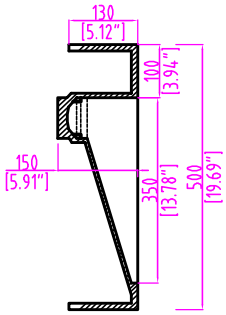
130
[5.12"]
100
[3.94"]
150
[5.91"]
350
[13.78"]
500
[19.69"]