Model #712

Single Arm Navigator™ Rotating Hose Reel

Owner's Manual

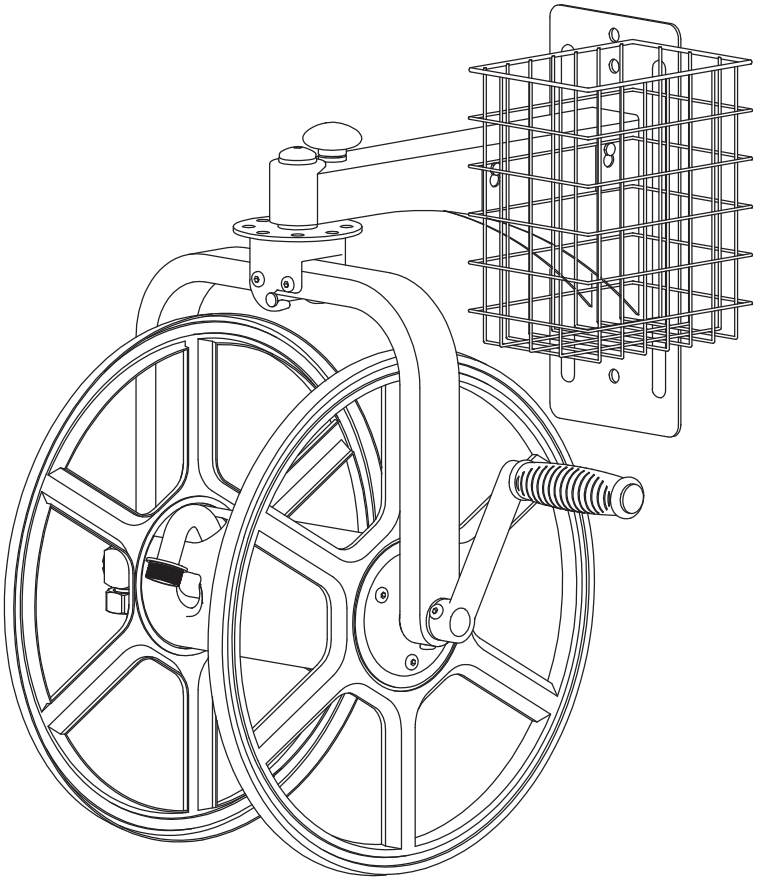

VISIT OUR WEBSITE: WWW.LIBERTYGARDENPRODUCTS.COM
OR CALL US TOLL FREE AT 1-866-820-5805

LIBERTY GARDEN PRODUCTS, INC.
1161 SOUTH PARK DRIVE, KERNERSVILLE NC 27284

IMPORTANT: READ THE OWNER'S MANUAL BEFORE ASSEMBLING

PRE-ASSEMBLY

Estimated Assembly Time : 10 minutes (not including mounting the hose reel)

TOOLS REQUIRED:

AA. Allen wrench (Supplied)

Adjustable Wrench

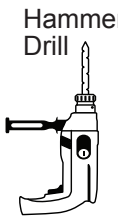

Hammer Drill

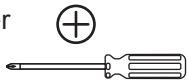

Phillips screwdriver or bit for an electric drill

Electric Drill

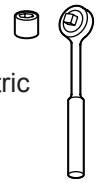

7/16 in. and 3/8 in. Socket and Socket wrench

Stud Finder

HARDWARE INCLUDED

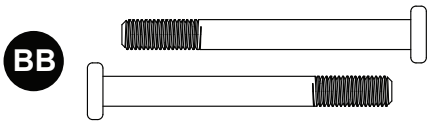

BB. Allen bolts (2)

CC. Lock nuts (2)

DD. Allen screw (1)

Note: Hardware not shown to actual size.

The wall mounting hardware is **NOT** included with this unit. Check with the retailer or visit a hardware store to purchase.

PARTS LIST

A. Crank handle (1) **B.** Leader hose (1) **C.** Swing arm (1) **D.** Basket (1) **E.** Hose reel (1)

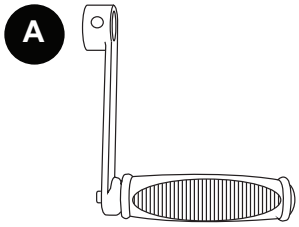

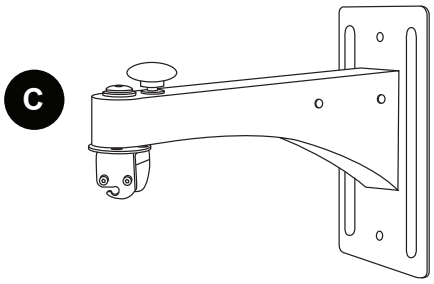

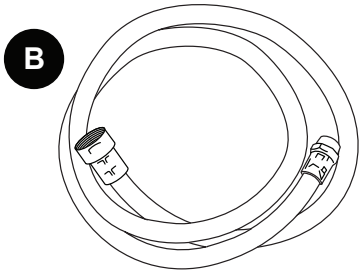

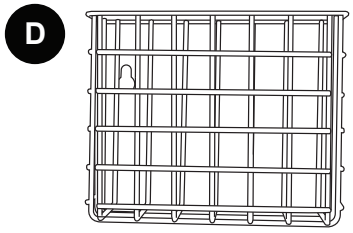

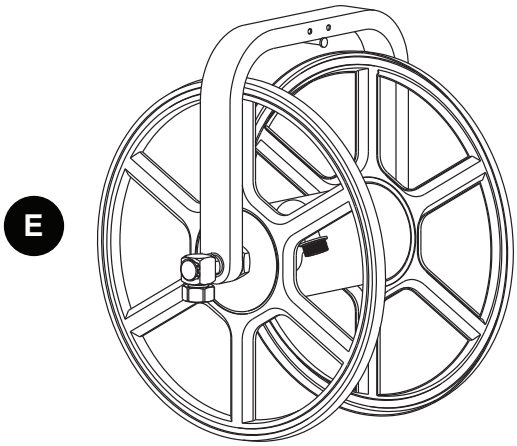

IMPORTANT: LAY OUT ALL PARTS AND FASTENERS. MAKE SURE ALL PARTS ARE ACCOUNTED FOR. IF ANY PART IS MISSING PLEASE CONTACT LIBERTY GARDEN PRODUCTS AT **1-866-820-5805. DO NOT CONTACT THE RETAILER.** YOU CAN ALSO VISIT OUR WEBSITE, WWW.LIBERTYGARDENPRODUCTS.COM, FOR MORE INSTRUCTIONS, PICTURES AND HELPFUL HINTS.

INSTALLATION

This hose reel must be mounted to a solid masonry wall or to wall studs

1. BRICK OR MASONRY ANCHOR SLEEVES

The following hardware (not included) is recommended for installation:

(2) 7 or 8 mm x 60 mm masonry wall anchors (5/16” x 2 1/2”)
(2) Anchor sleeves
(2) Washers
(2) Lock washers
(2) Nuts

• Position and hold your hose reel against the brick/masonry wall at a convenient height. Mark the position of each suspension hole on the wall. Remove the hose reel.

• Using a hammer drill, drill holes 5/16” in diameter at the marked positions on the wall.

• Insert the masonry wall anchors into the anchor sleeve. Next, insert the anchor and sleeve into the drilled holes until the steel sleeve is completely in the wall.

• Place the hose reel on the masonry wall anchors.

• Install a washer, lock washer, and nut over each wall anchor and tighten securely.

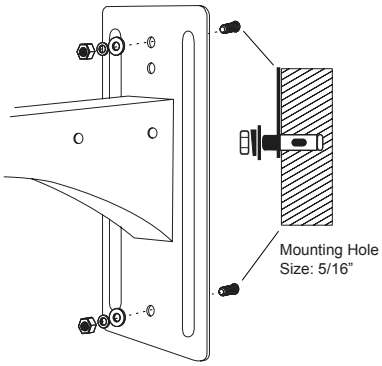

TIP: Remember to use the correct size and quantity of hardware to properly support the total weight of the unit. A standard 100' length of garden hose weighs approximately 15 lbs. Filled with water, the additional weight can exceed 20 lbs. The mounting hardware must be able to support the combined weight of the unit, garden hose, plus water.

2. BRICK OR MASONRY SCREWS

The following hardware (not included) is recommended for installation:

(2) 7 or 8 mm x 60 mm masonry screws (5/16” x 2 1/2”)
(2) Washers

• Position and hold your hose reel against the brick/masonry wall at a convenient height. Mark the position of each suspension hole on the wall. Remove the hose reel.

• Using a hammer drill, drill pilot holes 1/4” in diameter at the marked positions on the wall.

• Align the hose reel suspension holes with the pilot holes.

• Attach the hose reel to the wall using the concrete screws with washers and tighten securely.

WATCH THE VIDEO

NOTE: **Drill hole diameters may vary based on anchor sleeve, concrete screw, and wood screw manufacturer.**

Check product recommendations before drilling holes.

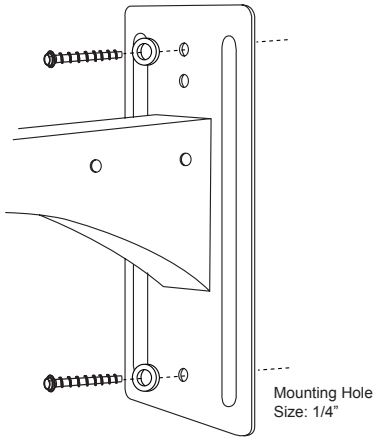

3. WOOD SCREWS

The following hardware (not included) is recommended for installation:

(2) 7 or 8 mm x 60 mm wood screws (5/16” x 2 1/2”)
(2) Washers

• Using a stud finder, locate the wood studs on your wall.

• Position and hold your hose reel against the wood wall at a convenient height. Mark the position of each suspension hole on the wall. Remove the hose reel.

• Using an electric drill, drill pilot holes 1/4” in diameter at the marked positions on the wall.

• Align the hose reel suspension holes with the pilot holes.

• Attach the hose reel to the wall using the wood screws with washers and tighten securely.

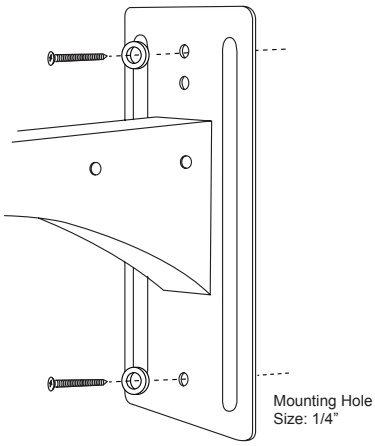

To learn more, watch a video on our warranty and care section @ www.libertygardenproducts.com

1 Attach the hose reel (E) to the swing arm (C) by hanging the reel on the small slot located at the front of the arm.

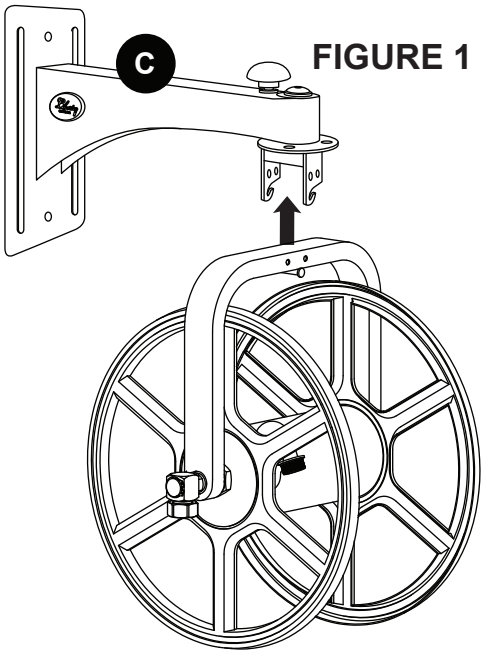

FIGURE 1

2 Line up the holes in the hose reel (E) with the swing arm (C) and insert long Allen bolts (BB)

FIGURE 2

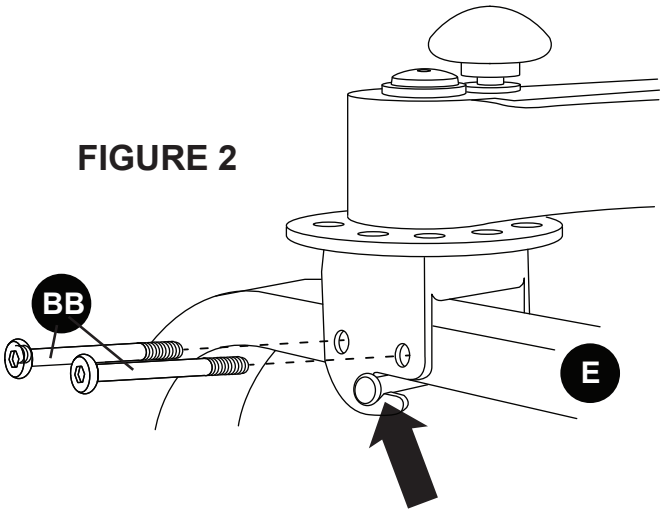

FIGURE 3

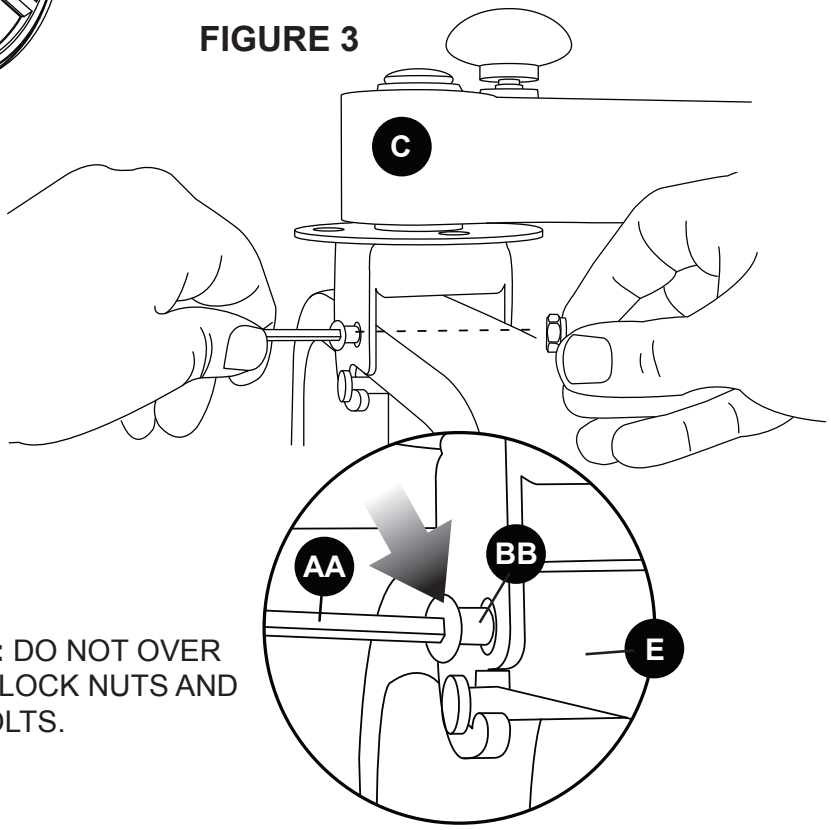

3 Tighten Allen bolts (BB) with the supplied Allen wrench (AA) at the same time using fingers screw on lock nuts (CC) to secure swing arm (C) to hose reel (E)

Pliers (not included) may be needed to hold and tighten lock nuts.

CAUTION: DO NOT OVER TIGHTEN LOCK NUTS AND ALLEN BOLTS.

4 Align the holes in the crank handle (A) with the crank handle shaft on the hose reel (E). Insert the short Allen screw (DD) into the crank handle and tighten with supplied Allen wrench (AA)

5 Attach your garden hose to the hose connector on the hose reel (E). The hose is now ready to wind around the spool. The Single Arm Navigator holds up to 125 ft. of 5/8” garden hose.

6 Attach leader hose (B) to swivel connector on the hose reel (D). Attach end of leader hose to water source.

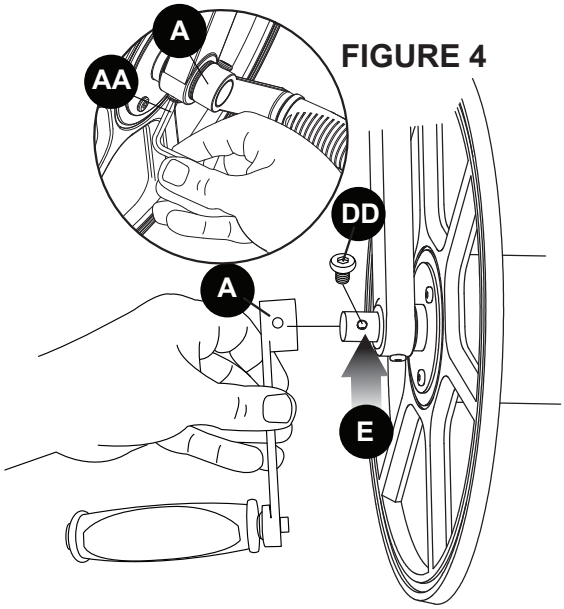

FIGURE 4

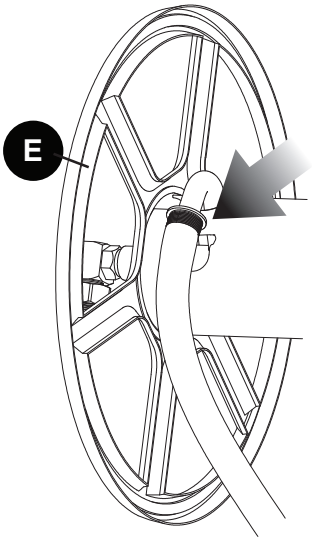

FIGURE 5

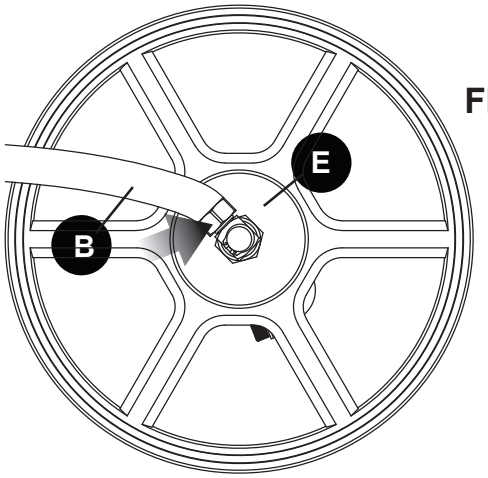

FIGURE 6

7 Attach the basket (D) to the swing arm (C) by fastening the keyhole opening to the resting pins then dropping the basket into the set position.

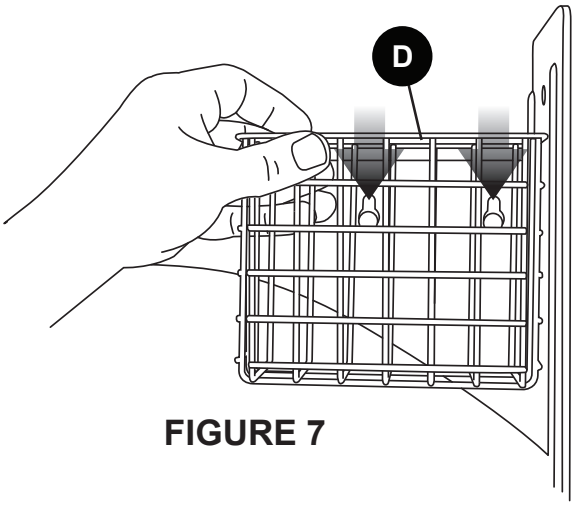

FIGURE 7

1 Pull up on handle knob located on the swing arm (C) then rotate hose reel (E) to one of the four locking positions.

FIGURE 1

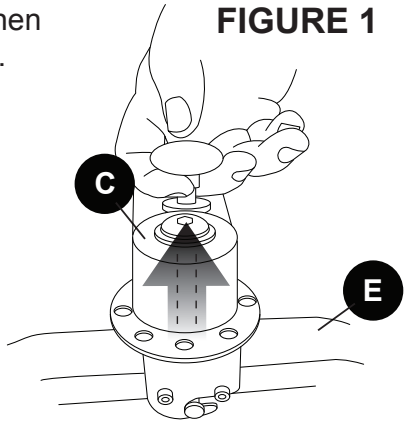

2 Pull up on the handle knob located on the swing arm (C) and turn the locking pin to the up position. The Single Arm Navigator rotating hose reel will now turn a full 360 degrees.

FIGURE 2

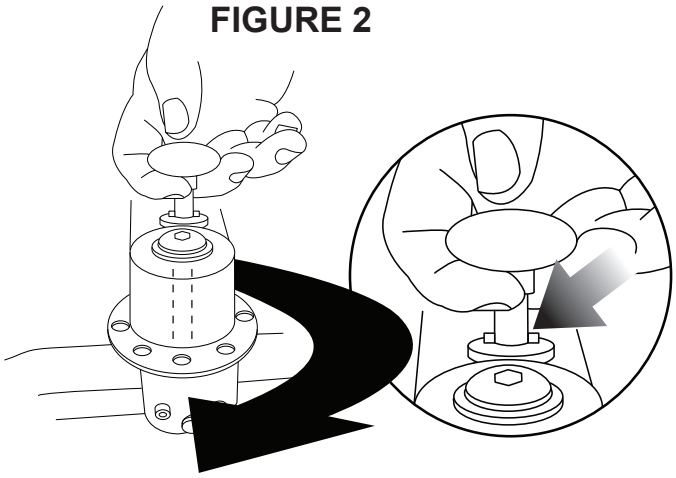

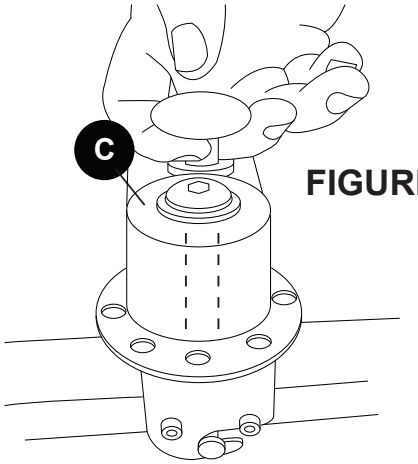

FIGURE 3

3 Release the handle on the swing arm (C) and lock unit into one of the four desired positions. Your Single Arm Navigator rotating hose reel is now ready for use.

4 Located at the bottom of the base spool (E) near the crank handle is a pre-assembled Allen screw. Using the supplied Allen wrench (AA) tighted or loosen tension on the spool. To increase the tension, tighten the screw, to reduce tension, loosen the screw.

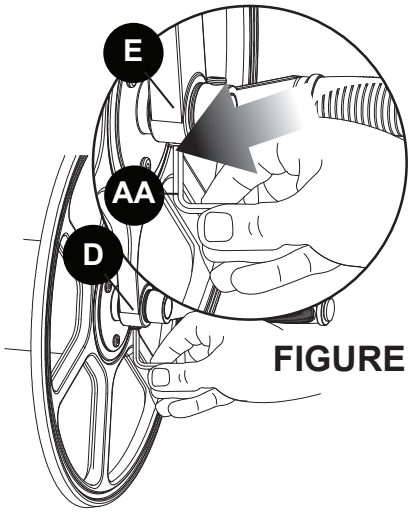

FIGURE 4

TIP: Keep reel in the locked position when winding garden hose.

1 Pull up on handle knob located on the swing arm (C) then rotate hose reel (E) to one of the four locking positions.

FIGURE 1

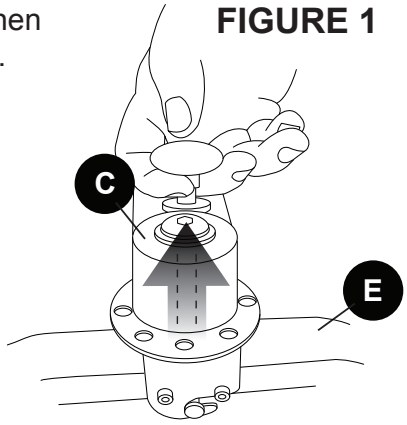

2 Pull up on the handle knob located on the swing arm (C) and turn the locking pin to the up position. The Single Arm Navigator rotating hose reel will now turn a full 360 degrees.

FIGURE 2

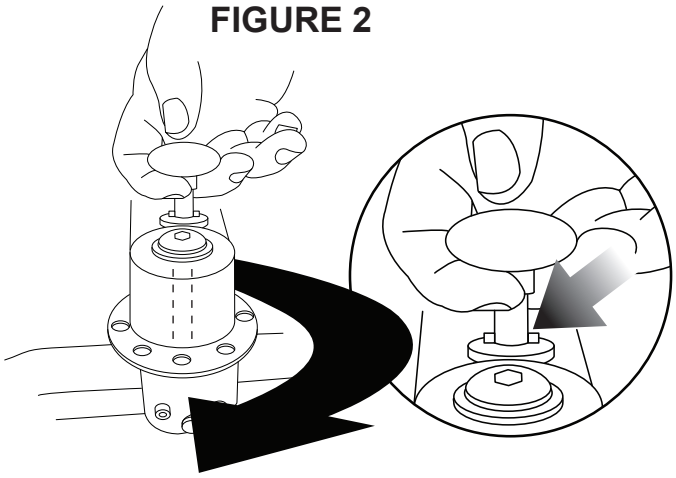

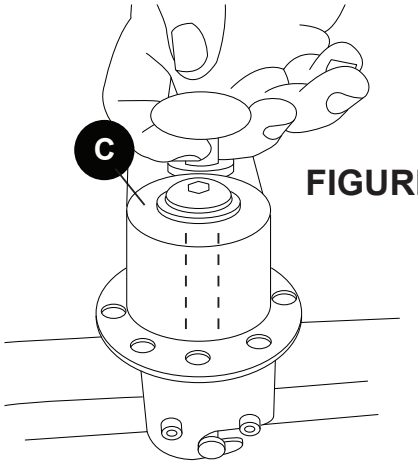

FIGURE 3

3 Release the handle on the swing arm (C) and lock unit into one of the four desired positions. Your Single Arm Navigator rotating hose reel is now ready for use.

4 Located at the bottom of the base spool (E) near the crank handle is a pre-assembled Allen screw. Using the supplied Allen wrench (AA) tighted or loosen tension on the spool. To increase the tension, tighten the screw, to reduce tension, loosen the screw.

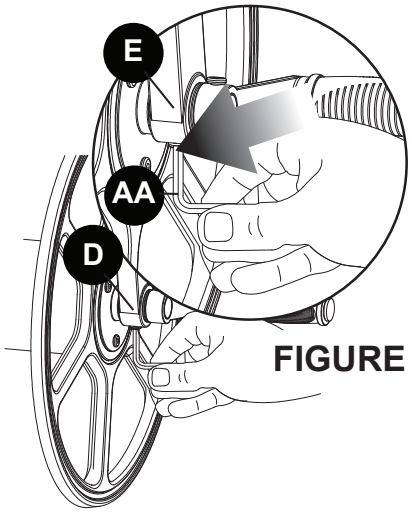

FIGURE 4

TIP: Keep reel in the locked position when winding garden hose.

TROUBLE SHOOTING GUIDE

Problem: Swivel head is not rotating, causing the leader hose to kink up.

Solution: Remove leader hose and turn the square head of the swivel several times; apply lubricant.

Problem: Your new Liberty hose reel is leaking at the swivel.

Solution: Apply Teflon/Plumber's Tape on the threads or/and make sure fixtures are tightened. It is normal for the swivel to leak slightly until the O-rings are wet and have seated. If the leaking continues, try these steps: **(It is not necessary to return the hose reel)**

1. If the leader hose is attached to the swivel, unscrew the hose and look inside the swivel.
2. Check that the hose washer is inside the nut. You may contact Liberty Garden Products for a new hose washer or obtain one at any hardware store.
3. If your swivel is old, the O-rings may be worn, please contact us for a new set of O-rings.
4. If these steps do not solve your leaking problem, contact Liberty Garden Product's customer service.

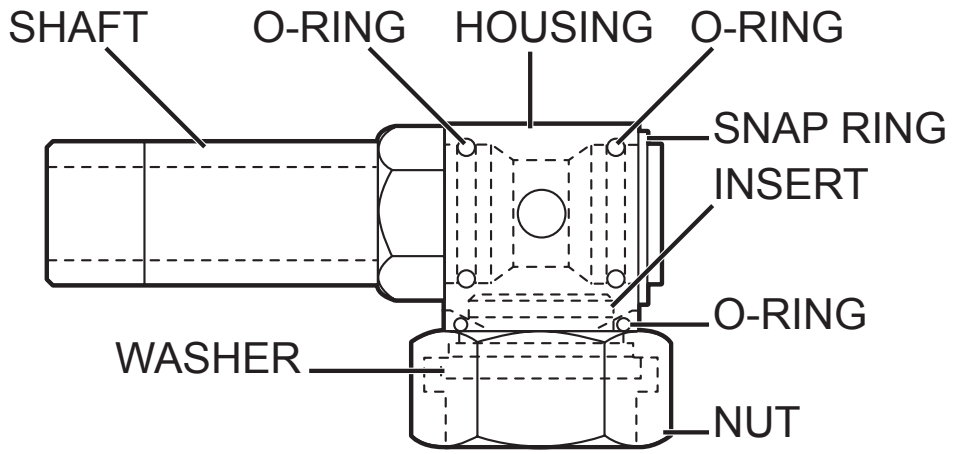

CALL US AT 1-866-820-5805 IF YOU HAVE ANY QUESTIONS REGARDING TROUBLESHOOTING AND MAINTENANCE

LIBERTY GARDEN PRODUCTS LIMITED WARRANTY

(Effective December 6, 2017)

This limited warranty is applicable to each original end-customer (hereinafter "Customer") purchasing the model the model 712 single-arm rotating wall mounted hose reel consisting of the structural metal frame and spool (hereinafter the "Structural Frame") and various other non-frame components (hereinafter the "Non-Frame Parts") sold by Liberty Garden Products, Inc. (hereinafter "Company") for Customer's own use and not for resale. The Structural Frame and Non-Frame Parts are collectively referred to herein as the "Products".

1. LIMITED WARRANTY; EXCLUSIVE REMEDIES:

1.1. LIMITED WARRANTY ON PRODUCTS: Company warrants solely to the original Customer that (a) the Structural Frame will be free from defects in materials and workmanship under normal use for a period of three (3) YEAR(S) from the date of original retail purchase, and (b) the Non-Frame Parts (which consist of the crank handle, swivel and water connections, leader hose and tires), will be free from defects in materials and workmanship under normal use for a period of ONE (1) YEARS from the date of original retail purchase. Notwithstanding the foregoing, the colors and finishes of the Products may vary within a reasonable scope due to unavoidable color variations in different production batches, and such variations shall not constitute a material defect. This limited warranty is limited solely to the original Customer with proof of purchase and is not transferable.

1.2. THE WARRANTY: During a covered Product's limited warranty period, Company will, at Company's sole option and discretion, (1) repair the defective component or product without charge or (2) replace the defective component or product without charge.

1.3. The foregoing limited warranty is subject to the Customer's proper storage, transportation, handling and use of the Products as the same are defined within Company's then-current published guides and instructions for use and care. The limited warranty does not include defects due to normal wear and tear, abuse or misuse, mishandling, neglect, accident, fire, lightning, sunlight or other natural hazard, delivery or transportation damage, failure to follow applicable directions or instructions, or improper or inadequate cleaning, maintenance, care, repairs, modifications, or use beyond a Product's intended use. Please note that since the Structural Frame is made from steel rust may occur over time. As such, this limited warranty does not include rust or defects due to the same.

1.4. LIMITED WARRANTY CLAIMS PROCEDURE: To obtain performance under this limited warranty, Customer shall notify Company in writing (to Liberty Garden Products, Inc., 1161 South Park Drive, Kernersville, NC 27284, Attn: Customer Service / Warranty Department), by email (to customerservice@libertygardenproducts.com), or by telephone (to (336) 992-3595) with a full description of the defect that is covered by warranty and a copy of the dated proof of purchase of the applicable product.

• Company shall review each such claim and issue Customer a return merchandise authorization ("RMA") in the event that the described defect or condition merits warranty review as determined by Company. Customers who have been issued a RMA shall, at Company's election, return the covered item to the same physical address listed above for reporting initial claims. Company shall not accept any returned product without a RMA.

• Upon receipt, Company will evaluate the returned product(s) to determine if there is a warranty claim and, if so, how Company wishes to remedy the same. During a covered product's respective limited warranty period, Company will, at Company's sole and absolute option and discretion, (1) repair the defective component or product without charge or (2) replace the defective component or product without charge. Refunds are not available pursuant to this limited warranty.

• Customer is solely responsible for transportation of the covered product(s) to the Company for evaluation (if applicable and requested by Company). In the event that Company determines that a claim under this limited warranty is justified, Company shall be responsible for transportation of the repaired, corrected, replaced or exchanged product back to Customer. Customer shall be solely responsible for the transportation of any product back to Customer if Company determines that a claim under this warranty is not justified.

• Any repaired, corrected, replaced or exchanged Products shall be subject to the Limited Warranty set forth to the duration of the original limited warranty period as set forth in Section 1.1. and not for any extended duration, following their repair, correction, replacement or exchange.

1.5. IF A COMPANY PRODUCT DOES NOT CONFORM TO THESE LIMITED WARRANTIES, THE PURCHASER'S SOLE AND EXCLUSIVE REMEDY IS, AT COMPANY'S SOLE AND EXCLUSIVE OPTION, THE (1) REPAIR OF ANY DEFECTIVE PRODUCT OR COMPONENT PART OR (2) REPLACEMENT OF ANY DEFECTIVE PRODUCT OR COMPONENT PART. THE LIMITED WARRANTY AND REMEDIES SET FORTH ABOVE ARE EXCLUSIVE AND MADE IN LIEU OF ALL OTHER WARRANTIES, REMEDIES, RIGHTS OR CONDITIONS, WHETHER ORAL OR WRITTEN, EXPRESS OR IMPLIED, EITHER IN FACT OR BY OPERATION OF LAW, STATUTORY OR OTHERWISE, INCLUDING THE IMPLIED WARRANTIES OF MERCHANTABILITY AND FITNESS FOR A PARTICULAR PURPOSE. COMPANY SPECIFICALLY DISCLAIMS, WITHOUT LIMITATION, ANY AND ALL OTHER WARRANTIES, EXPRESS OR IMPLIED, OF ANY KIND. IF COMPANY CANNOT LAWFULLY DISCLAIM IMPLIED WARRANTIES UNDER THIS LIMITED WARRANTY, ALL SUCH WARRANTIES, INCLUDING THE IMPLIED WARRANTIES OF MERCHANTABILITY AND FITNESS FOR A PARTICULAR PURPOSE, ARE LIMITED IN DURATION TO THE DURATION OF THIS LIMITED WARRANTY. The Company does not assume or authorize any person to assume for them any other liability in connection with the Products.

2. EXCLUSION AND LIMITATION OF LIABILITY:

IN NO EVENT, WHETHER BASED ON CONTRACT OR TORT OR OTHER LEGAL THEORY, SHALL COMPANY BE LIABLE FOR ANY INDIRECT, INCIDENTAL, PUNITIVE, SPECIAL OR CONSEQUENTIAL DAMAGES, INCLUDING BUT NOT LIMITED TO, DAMAGES TO OTHER PROPERTY, INCONVENIENCE, DAMAGES FOR LOSS OF PROFITS, REVENUE, GOODWILL OR USE, INCURRED BY CUSTOMER OR ANY THIRD PARTY, WHETHER IN AN ACTION IN CONTRACT, TORT, STRICT LIABILITY, OR IMPOSED BY STATUTE, OR OTHERWISE, EVEN IF ADVISED OF THE POSSIBILITY OF SUCH DAMAGES. Some states do not allow the exclusion or limitation of incidental or consequential damages or exclusions or limitations on the duration of implied warranties or conditions, so the above limitations or exclusions may not apply to Customer. In jurisdictions that limit the scope of or preclude limitations or exclusion of remedies or damages, or of liability, such as liability for gross negligence or willful misconduct or do not allow implied warranties to be excluded, the limitation or exclusion of warranties, remedies, damages or liability set forth above are intended to apply to the maximum extent permitted by applicable law. This limited warranty gives the Customer specific legal rights, and the Customer may also have other rights that vary by state, country or other jurisdiction.

3. SEVERABILITY:

If any provision of this limited warranty is held to be illegal, invalid or otherwise unenforceable, such provision will be enforced to the extent possible consistent with its stated intention, or, if incapable of such enforcement, will be deemed to be severed and deleted from this limited warranty, while the remainder of the terms of this limited warranty will continue in full force and effect.

4. DISPUTE RESOLUTION:

ThisLiberty Garden Products, Inc. Limited Warranty shall be governed by and construed in accordance with the laws of the State of North Carolina, without regard to its principles of conflicts of law. The parties acknowledge the exclusive jurisdiction of the federal and state courts of the State of North Carolina. Any claims or disputes under this Liberty Garden Products, Inc. Limited Warranty shall be heard exclusively in any state or federal courts sitting in Guilford County, North Carolina, and both parties expressly consent to the personal jurisdiction and venue of the North Carolina state and federal courts for such actions.

"Liberty" is a registered trademark of Liberty Garden Products, Inc. Kernersville, NC. All Rights Reserved 2017

Updated 12/6/2017