CARE AND MAINTENANCE

Store outdoor furniture indoors or cover well when not in use.
Remove wicker furniture from standing water. Dust regularly with small brush or vacuum
Spills should be taken care of immediately before they harden or
stain with a slightly dampened sponge.

NOTICE

* Please make sure that you have all parts indicated before you begin assembly of this item
* This item should be assembled on a soft surface to prevent scratching the finish during assembly
* This item may require periodic tightening

Weight Capacity: 550 lbs
Warning : Do not stand on bench
Warning : Do not over torque bolts/ screws

WARNING

Part List and Hardware List

PIECE	DESCRIPTION	PICTURE	QUANTITY
A	Seat Frame	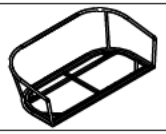	1X
B	Leg		4X
C	Cushion Back		2X
D	Cushion Seat	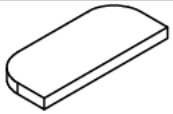	1X
HW1	Socket screws 6 x 0.5 x 15 mm		16X
HW2	Allen key		1X

Product Dimensions: 54.33" W x 27.17" D x 28.74" H

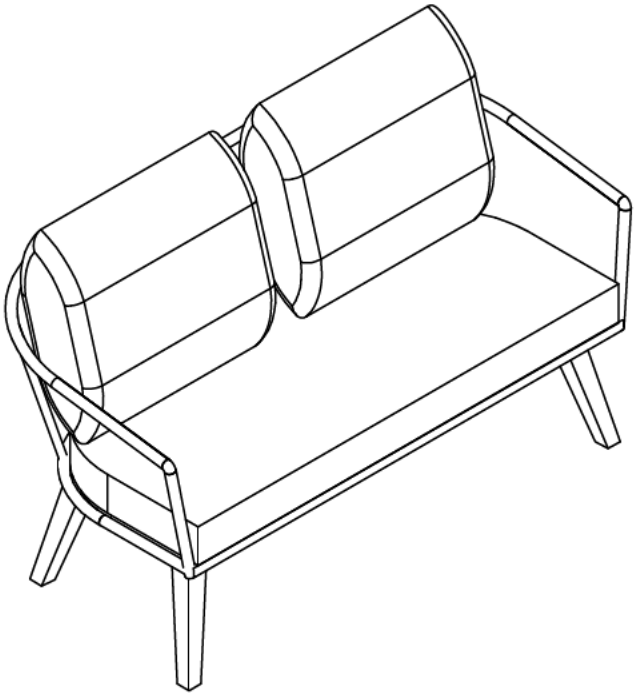

PREPARATION

Before beginning assembly of product, make sure all parts are present. Compare parts with package contents list and hardware contents list. If any part is missing or damaged, do not attempt to assemble the product.
Estimated Assembly Time: 10 minutes.
Tools Required for Assembly (included): Allen Key

1

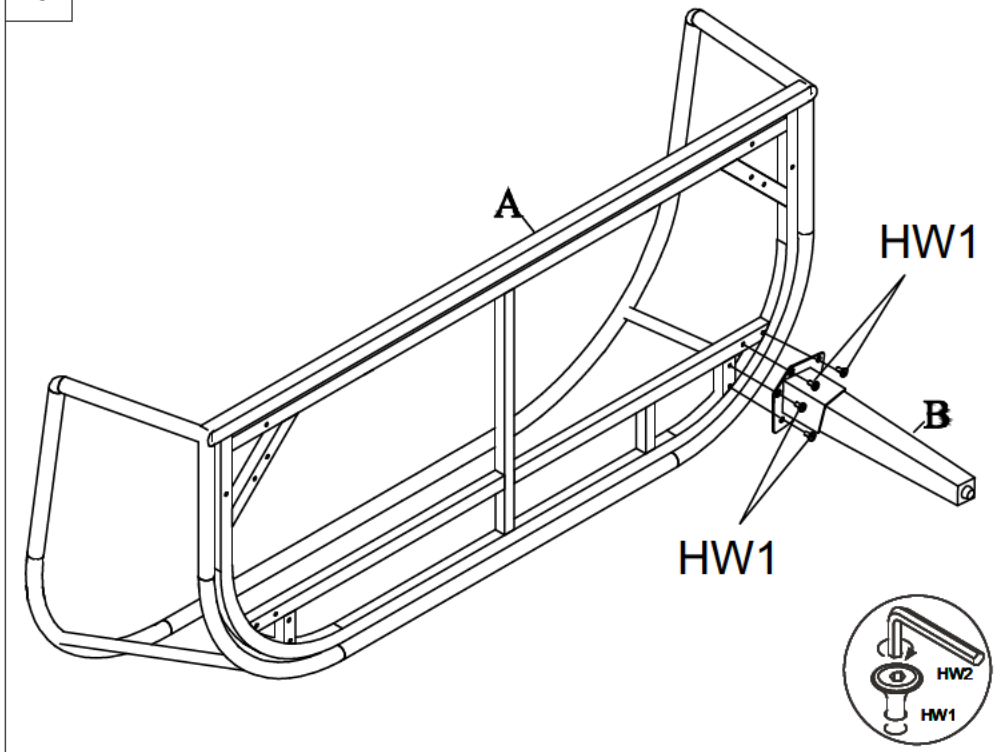

Step 1
Attach Leg (B) to Seat Frame (A). Use Bolt (HW1) tighten with Allen Key (HW2).

2

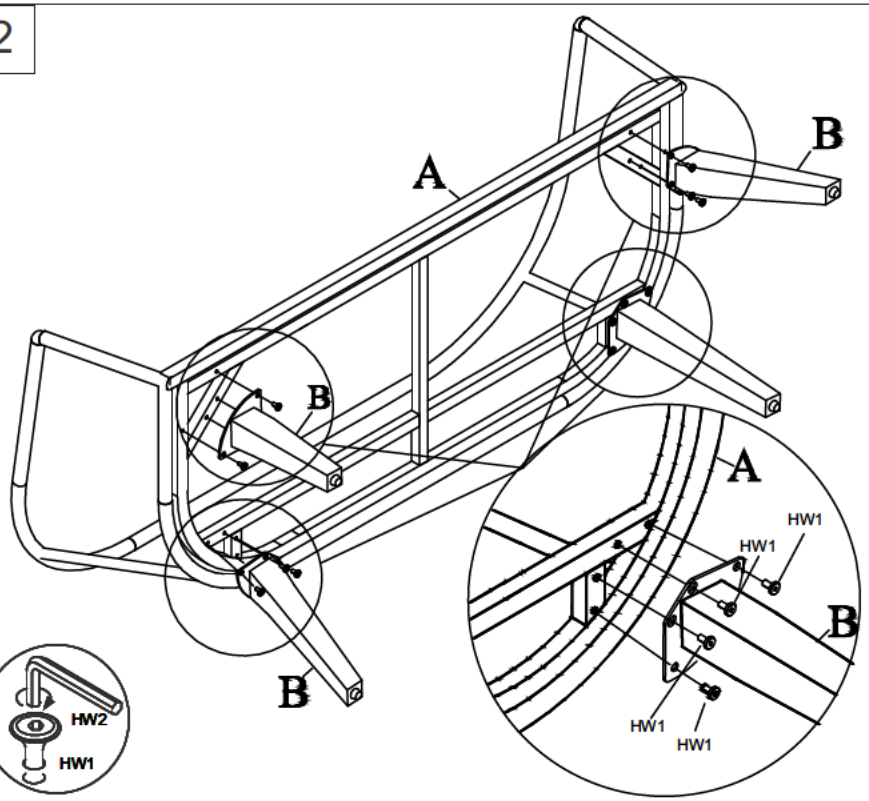

Step 2
Like step 1 using Leg (B) is inserted into the Seat Frame (A). Use Bolt (HW1) tighten with Allen Key (HW2).

PREPARATION

Before beginning assembly of product, make sure all parts are present. Compare parts with package contents list and hardware contents list.
If any part is missing or damaged, do not attempt to assemble the product.
Estimated Assembly Time: 10 minutes.
Tools Required for Assembly (included): Allen Key

3

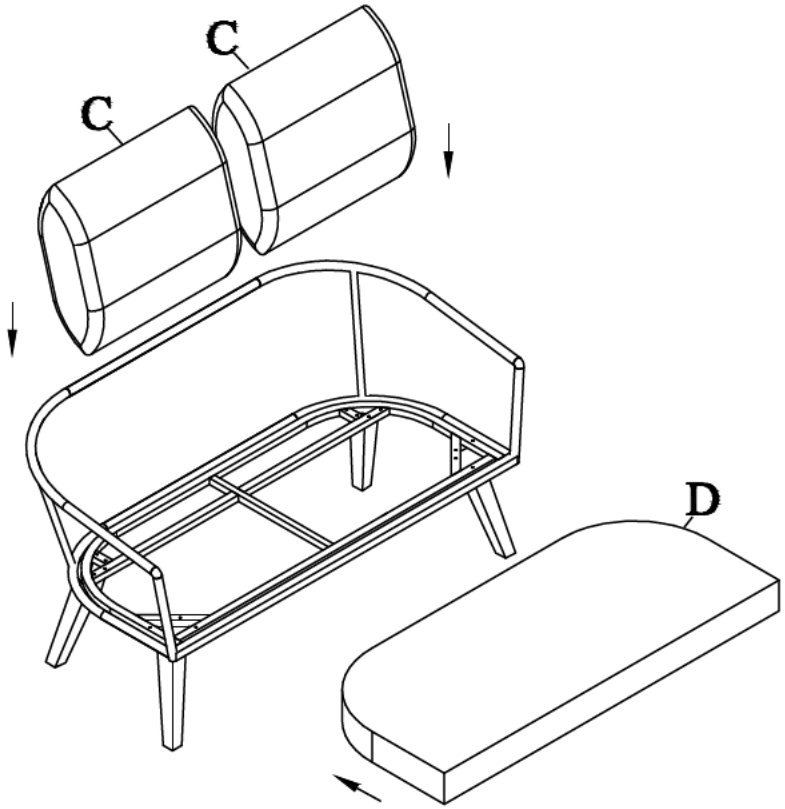

Step 3
Put Back Cushion (C) and Seat Cushion (D) on the Bench
The Bench is ready to be used.

4

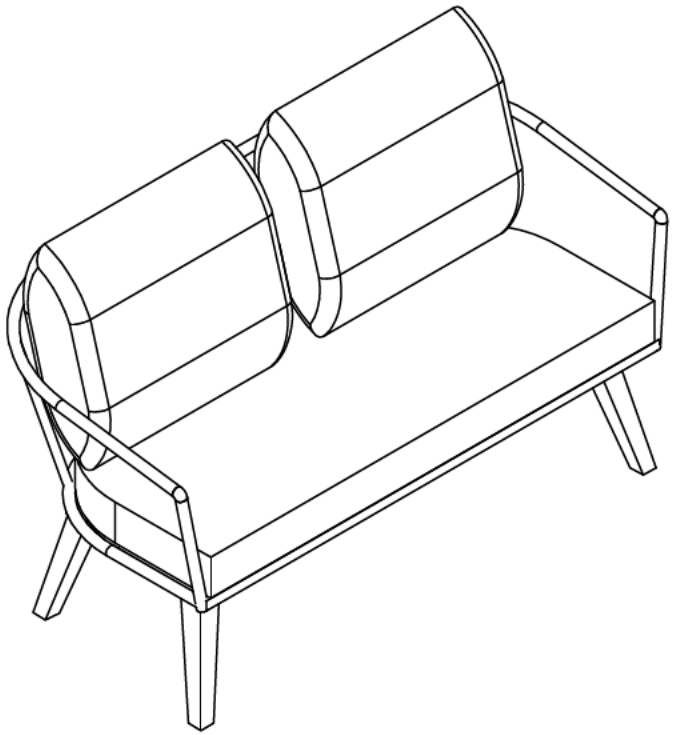

Step 4
Caution: This Bench can only be used on a flat, level surface