ASSEMBLY INSTRUCTIONS

Standard Sofa

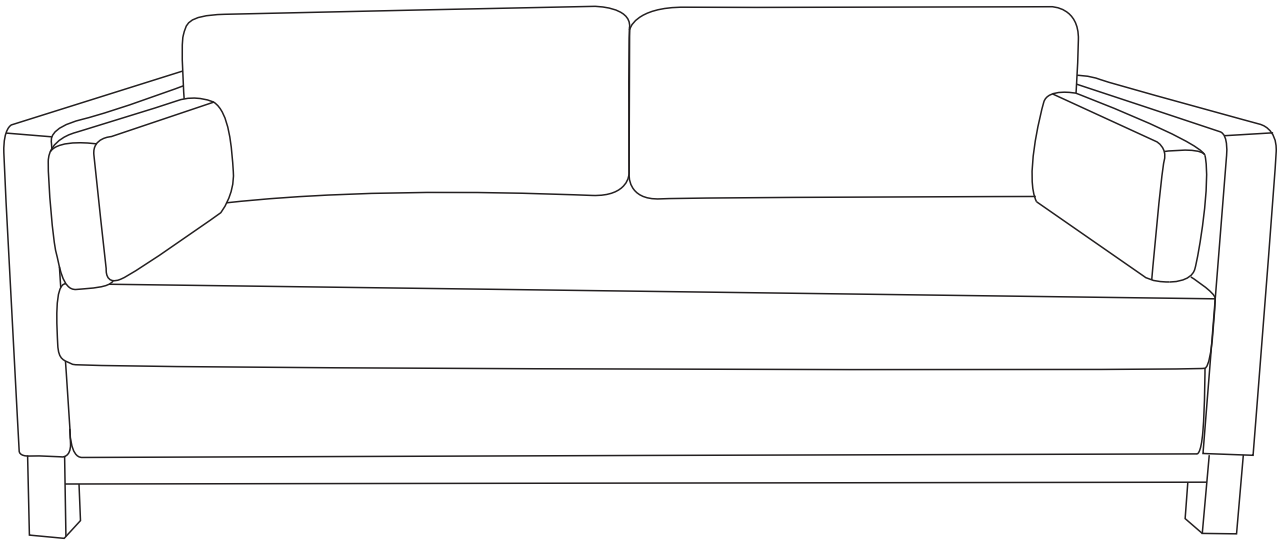

TIME | 2 OF PEOPLE | DIFFICULTY

NOTICE

Instruction Booklet - Important Safety Information

Thank you for choosing our product. Please review this booklet carefully for essential safety information and keep it for future reference.

● Upon receiving the product, ***ensure all parts are present and intact*** before proceeding with installation. Follow the entire installation instructions provided.

● During installation, exercise caution and refrain from immediately tightening screws. Secure all screws to 80% before final tightening.

● Note: Cushions are ***compressed*** and cannot be recompressed once opened. Returns are accepted only for items in their ***original, unopened condition.*** For assistance, contact our support team

if you encounter the following issues:

A. The outer box is damaged.

B. The product is damaged/bent/cracked while you open the box.

C. The parts/accessories/assembly tools are missing.

D. The instructions are not clear and cannot be referred to.

E. The product has functional problems.

F. Other aspects that you are not satisfied with.

Your satisfaction is our priority, and we're here to assist you every step of the way.

Before installation, please check that the parts are all included !

Carton A

Materials

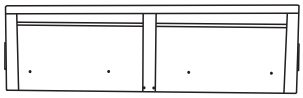

A*1

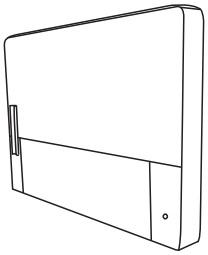

B*2

C*1

D*1

E*2

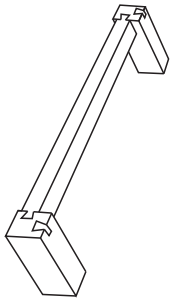

F*2

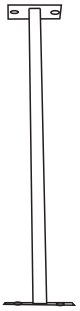

G*1

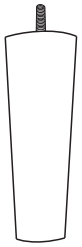

H*1

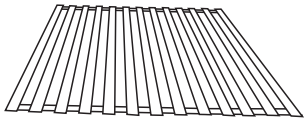

I*2

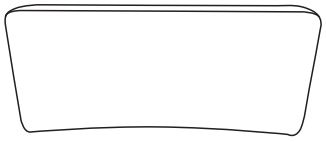

J*2

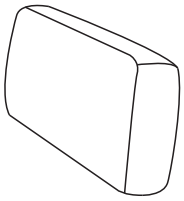

K*2

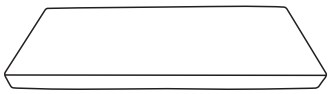

L*1

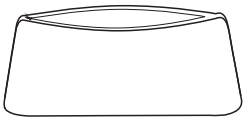

M*2

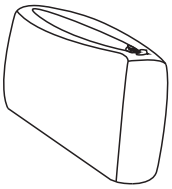

N*2

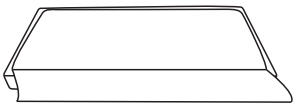

O*1

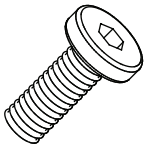

M6*16mm

P*4

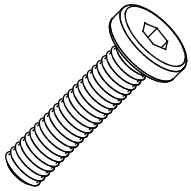

M6*55mm

Q*18

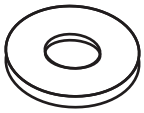

R*22

M5

S*1

Installation Steps

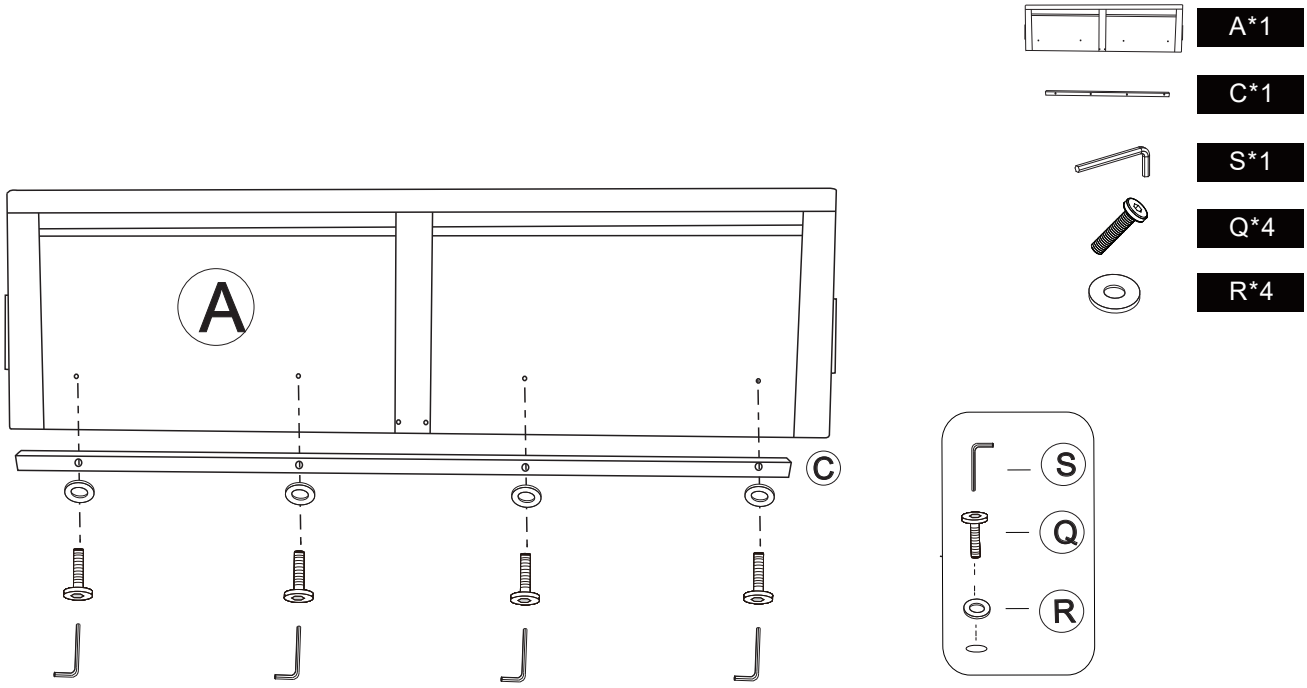

STEP 1

Assemble (A) and (C) with screws at the corresponding blank positions shown in t he diagram, ensuring the hook-and-loop fastener side of (C) faces upward.

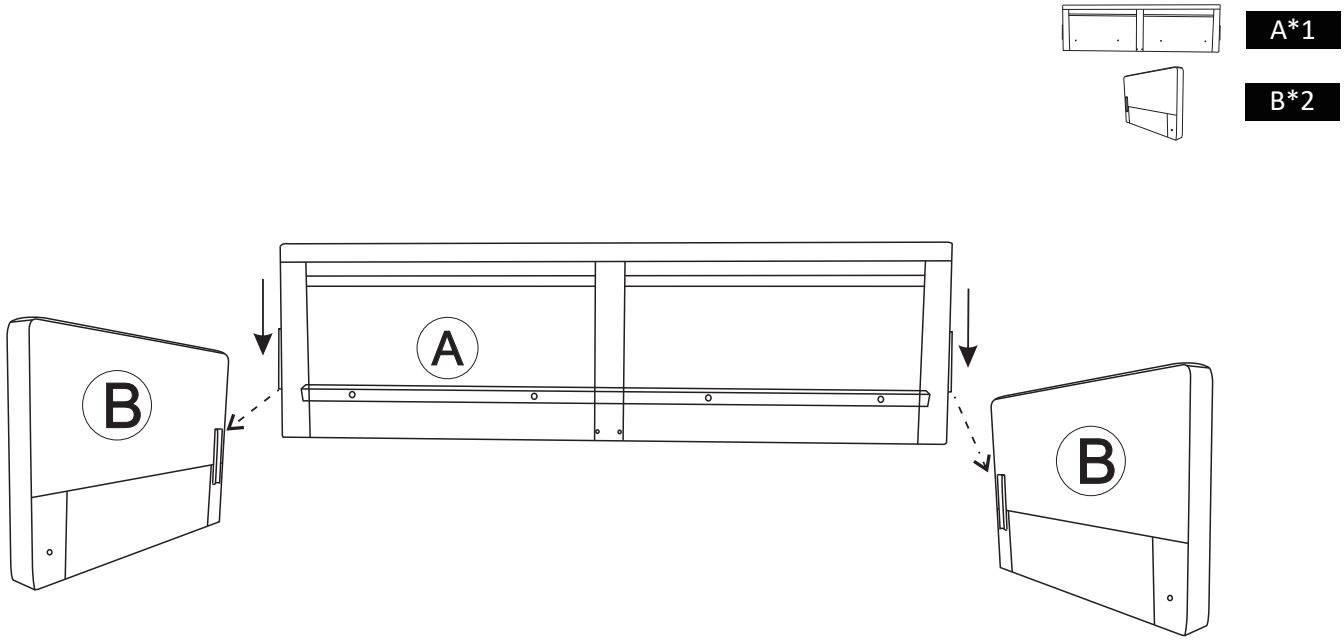

STEP 2

Assemble (A) and (B) together, with (A) connected to the plug-in on (B) from top to bottom, shown in the figure.

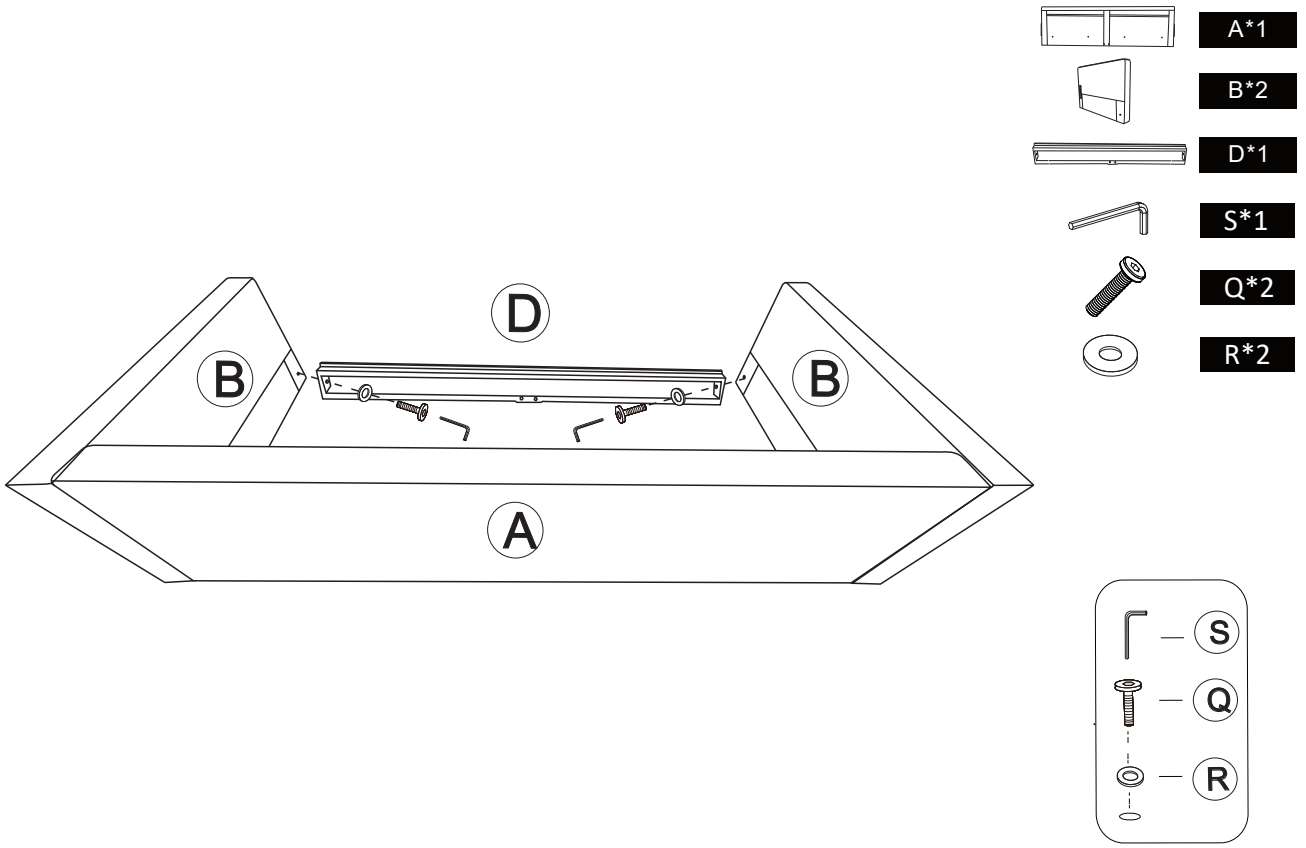

STEP 3

Install (D) in the middle of (B) and secure it with screws, ensuring the side with Velcro faces upward shown in the diagram.

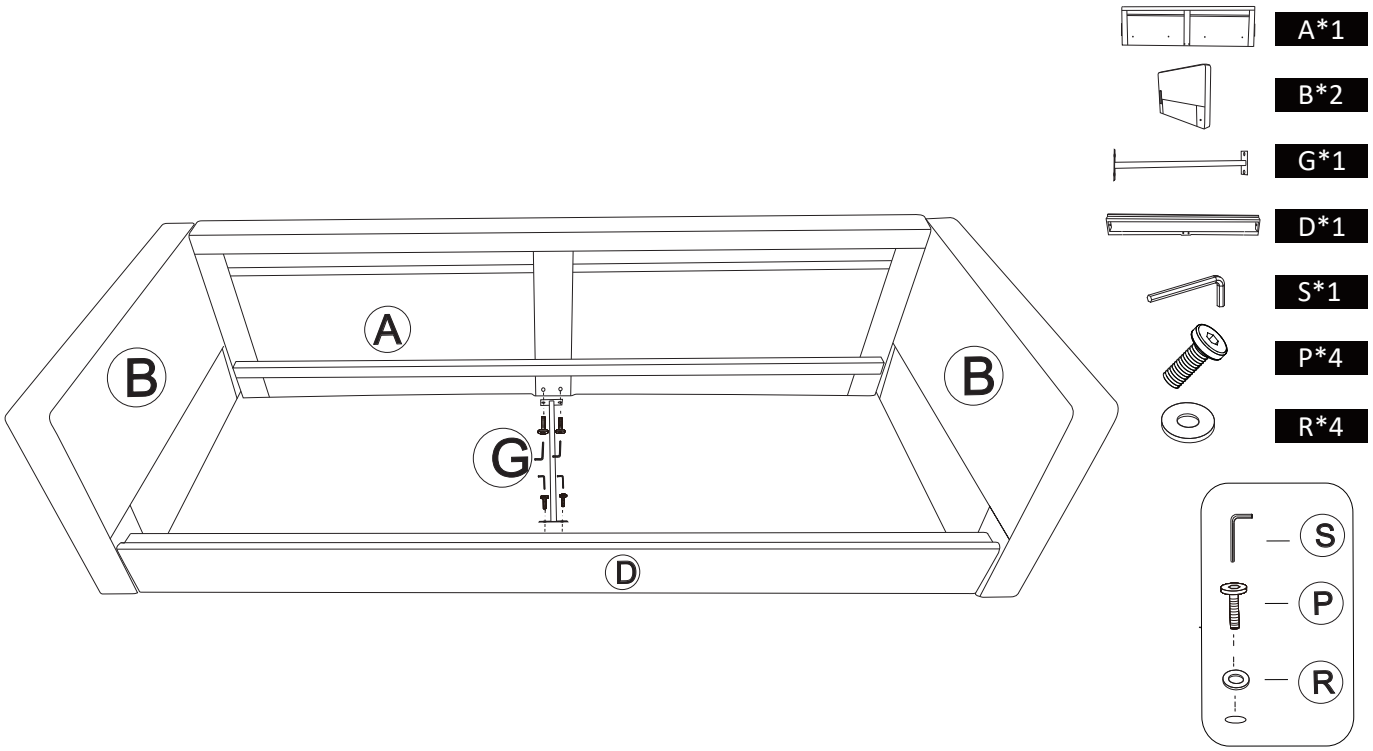

STEP 4

Fix (G) between (A) and (B), shown in the figure.

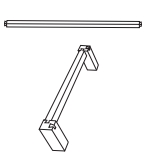

E*1

F*2

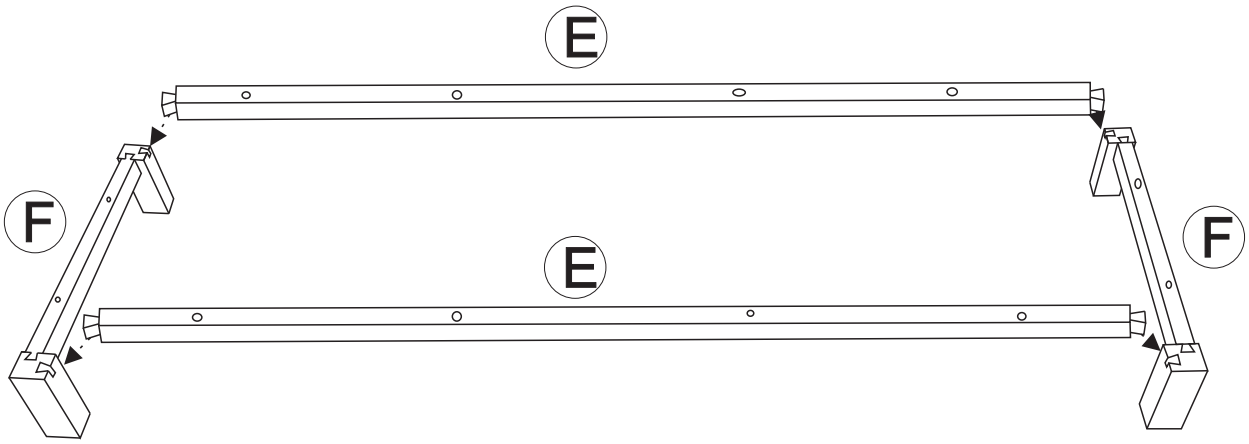

STEP 5

Connect the grooves of (F) and (E), ensuring the small hole of (E) faces upward, shown in the figure.

H*1

S*1

Q*12

R*12

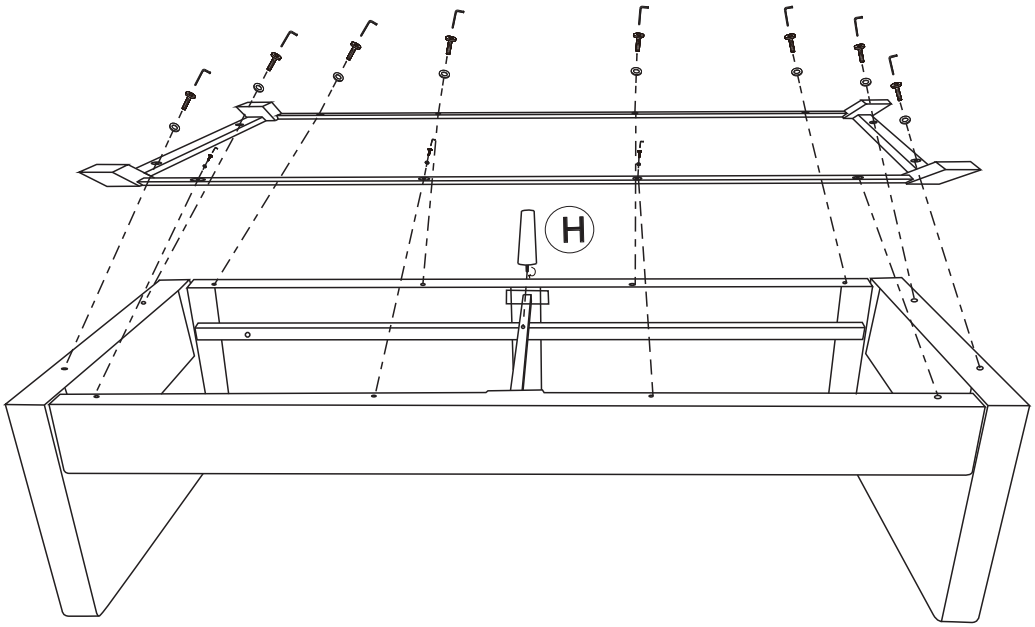

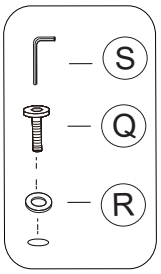

STEP 6

Flip the sofa main body assembled in step 4 upside down and install the accessories assembled in step 5 onto the sofa main body,Fasten H to G by screwing.Shown in th e figure. "Note that the U-shaped hole faces upward."

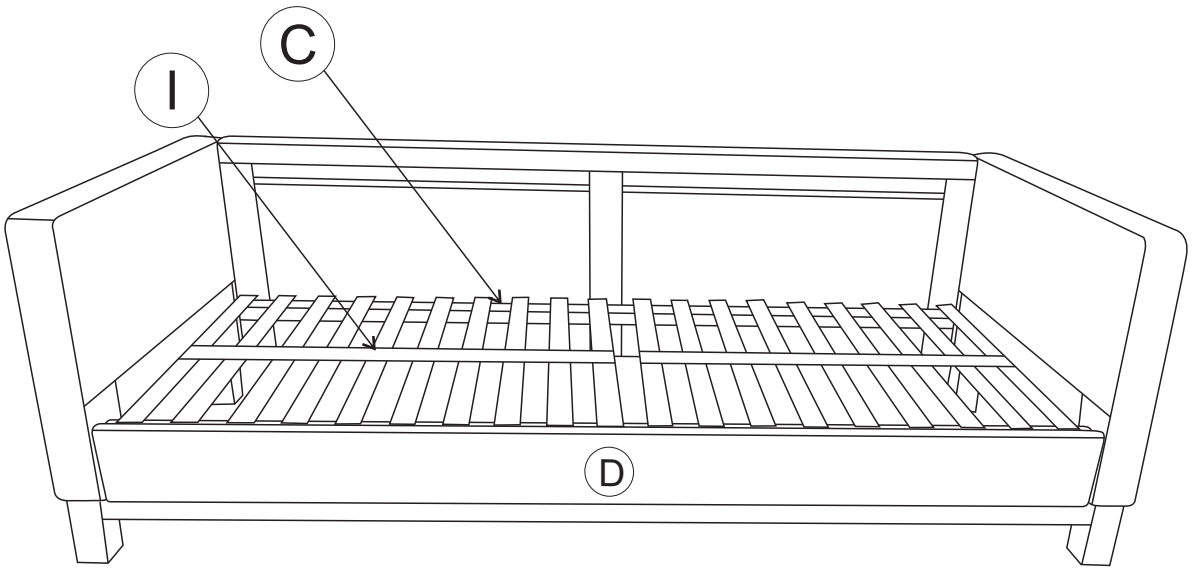

STEP 7

Place the assembled sofa from Step 5 upright, lay the accessory (I) flat on accessories (C) and (D), and secure it firmly with Velcro as shown in the diagram.Note that the side of (I) with Velcro should face upward.

-Cushion Fluffing Instructions
1.Upon receiving the package, take out the compressed cushions.
2.Gently pat and knead the cushions repeatedly.
3.Allow the internal sponge to fully expand for 48–72 hours until it regains a plump, fluffy shape before use.

Note: The expansion time may vary slightly depending on temperature and humidity.

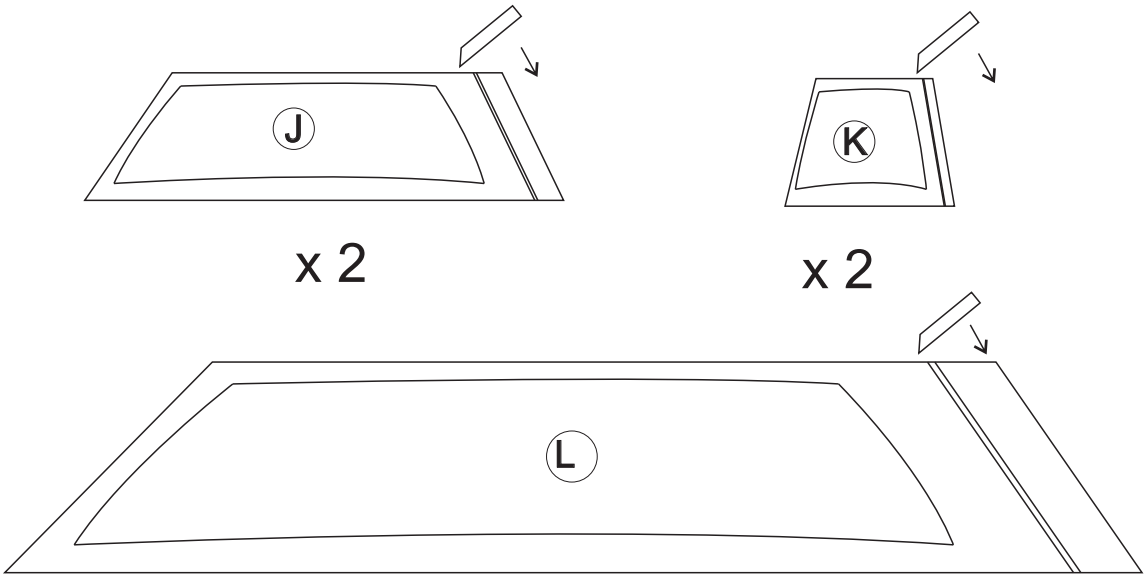

STEP 8

Remove (J) , (K) ,(L)from the compression bag. Shown in the figure.

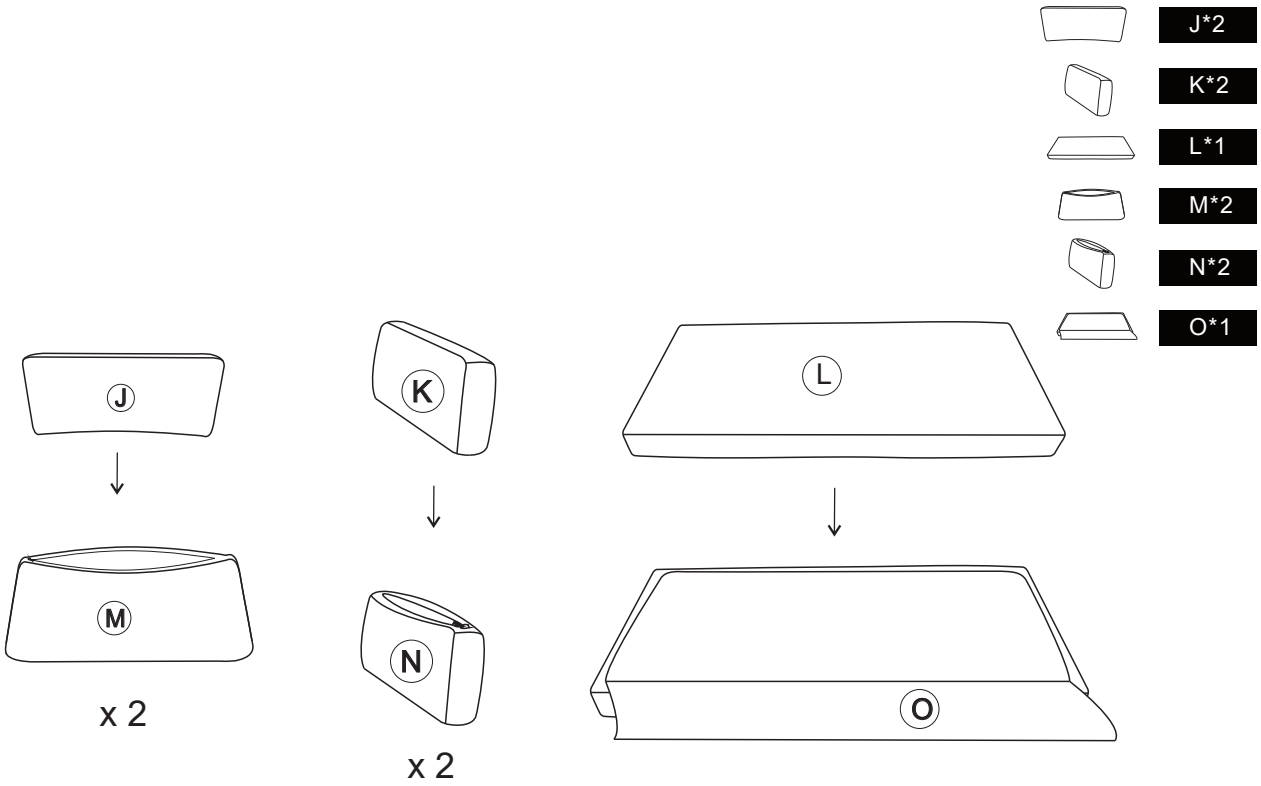

STEP 9

Remove(M),(N),(O) from the packaging bag, and insert(J) , (K) ,(L) into the corresponding sofa covers shown in the diagram.

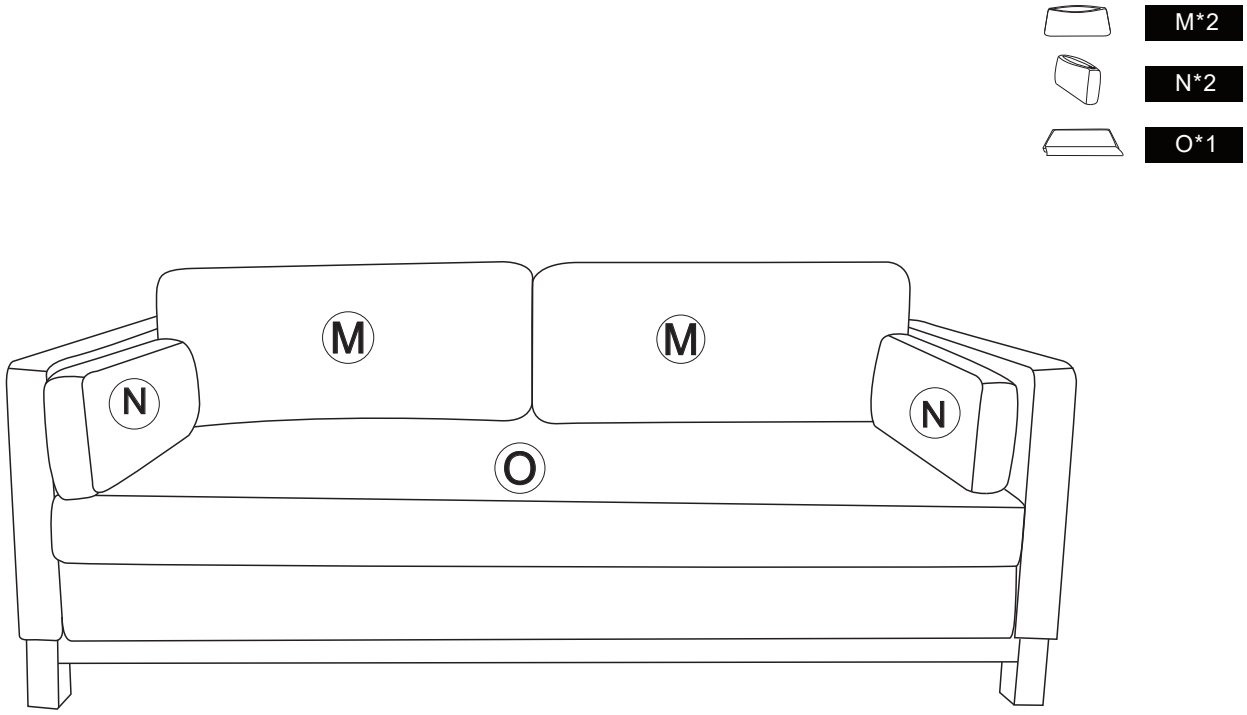

STEP 10

Place (M), (N), and (O) in the positions shown in the diagram, and the sofa as sembly is complete.

Frequently Asked Questions

We understand that receiving damaged or defective products can be disappointing, and we're here to assist you every step of the way. Here's how to address common concerns and initiate a damage claim:

1.What should I do if my shipment is damaged or products received are defective?

We're genuinely sorry to hear about any inconvenience caused. Please reach out to us promptly, and our team will prioritize resolving the matter swiftly and effectively. To file a damage claim, follow these steps:

A. Retain the original box in case a return is required.

B. Take photos of the damaged box, the damaged part of the item, tracking number, and return label on the box to help us process a replacement or refund.

2.Can I return the product if I'm not satisfied?

While we uphold stringent quality standards and collaborate with experienced manufacturers, we acknowledge that dissatisfaction may arise. If you're still unsatisfied, you can initiate a return within 30 days of receiving the product. Simply message us with your reasons for return, and we'll facilitate the process.