40IN-JKX-1 AssemblyInstructions

V-1.0

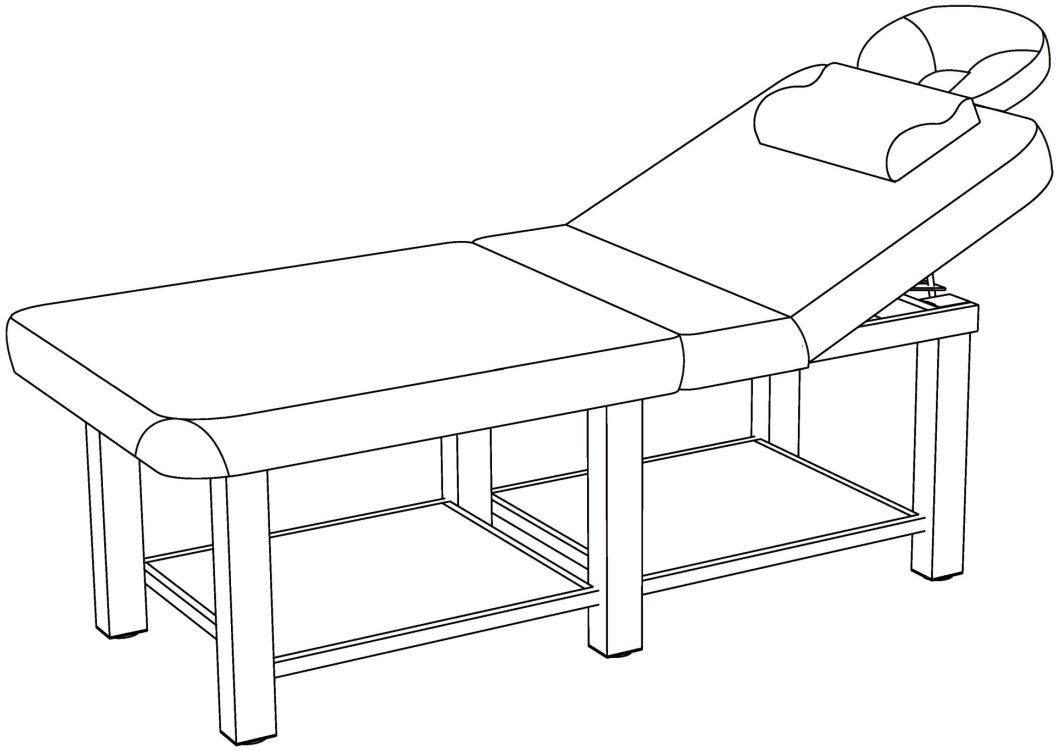

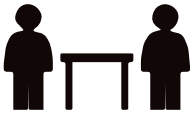

Assembled byTwo Adults
Recommended maximum load capacity for massage beds: 800lbs

IMPORTANT:

1. Please read the instructions carefully before assembling the product.
2. Before starting the assembly process, check the package carefully to make sure all necessary boards and parts are included.
3. Before assembly, put all parts and boards in an open area. Ensure that you have the correct parts before screwing them in place.

⚠ Warning:

1. During assembly, keep all small objects out of the reach of children, as they may be fatalif swallowed or inhaled
2. Never allow children to climb or play around the product to protect children from injury caused by the tilting of the product.
3. To avoid the potential dangers of suffocation, please keep all parts and packaging away from children.

Accessories list

A x1 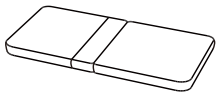 bed mattress	B1 x2 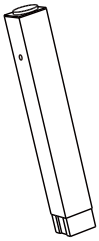 bed leg	B2 x2 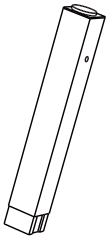 bed leg	B3 x2 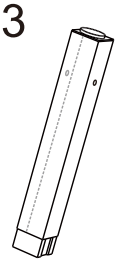 bed leg
D x1  pillow	E x2  headrest rod	F x4 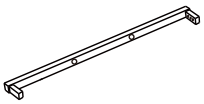 Rack rod with hole	G x4 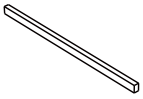 Rack rod without hole
H x2  Rackboard	I x1  Shaped pillow	J x1 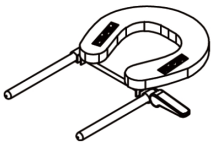 Shaped pillow rack	K x4 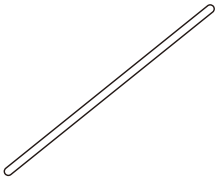

1 x2  Screws	2 x1  Hexagon Wrench	3 x8 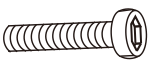 M6*30 Screws	4 x8 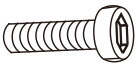 M8*20 Screws

★ In many cases, we include additional hardware. So after following the assembly instructions, don't worry if there are still extra pieces left over-they're included as a "just in case" for your convenience.

STEP 1

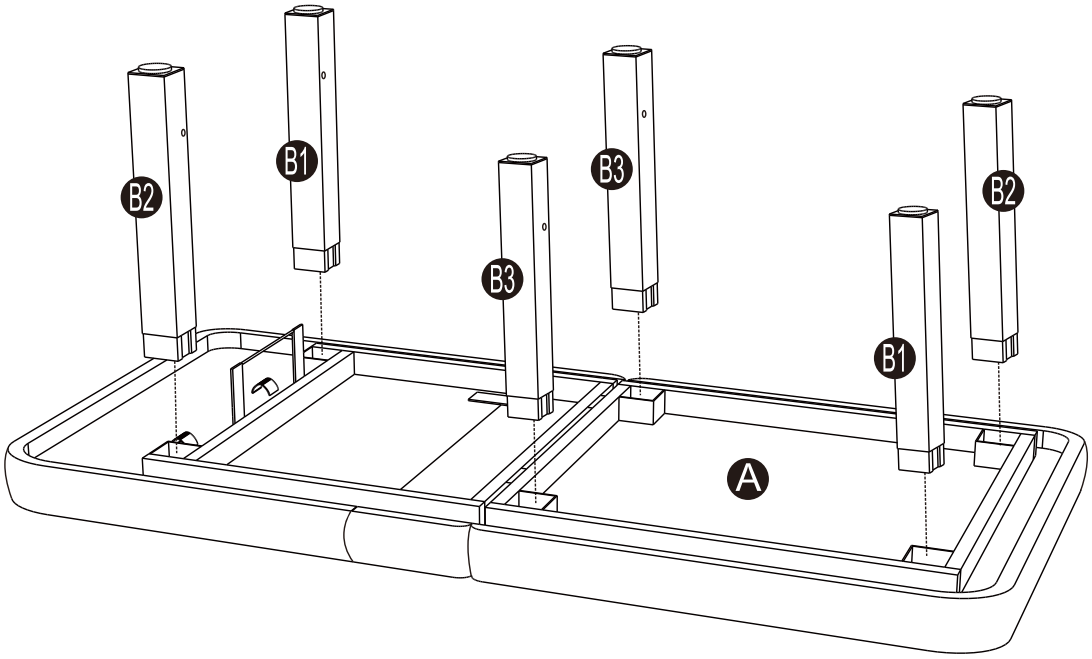

STEP 2

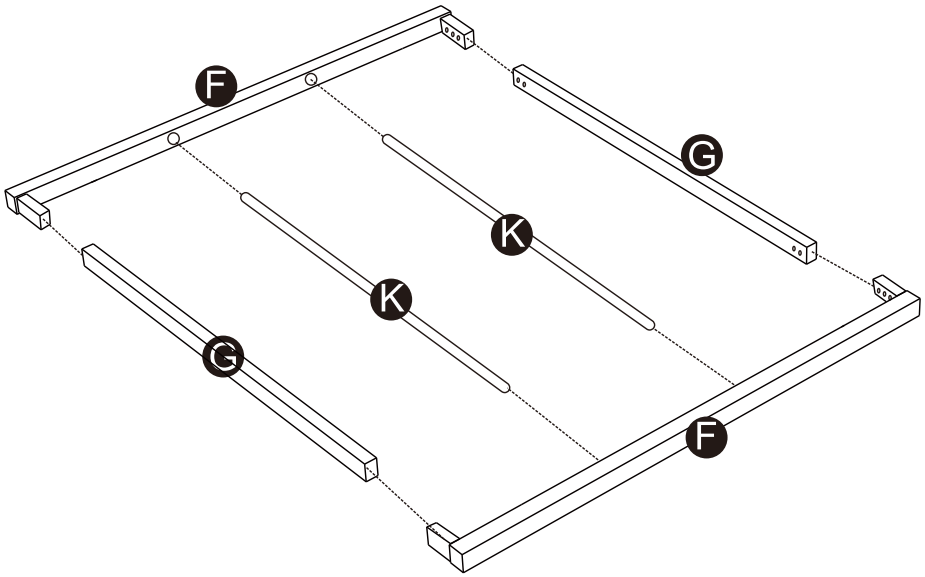

STEP 3

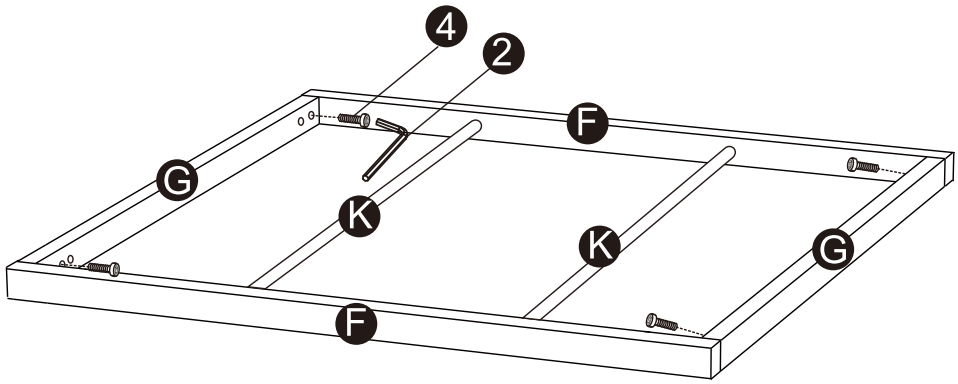

②x1

④x8 M8*20

STEP 4

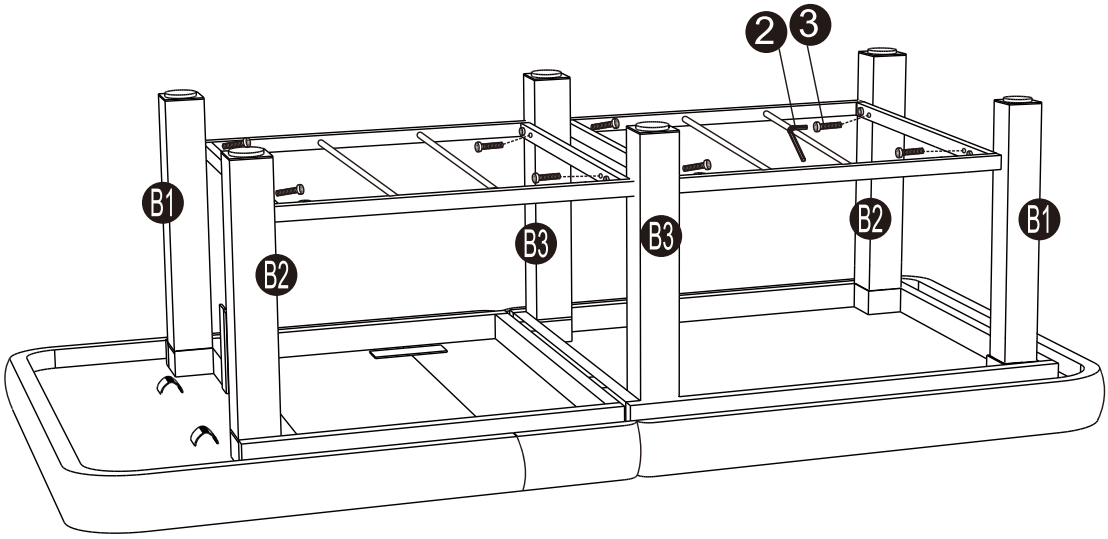

②x1

③x8 M6*30

STEP 5

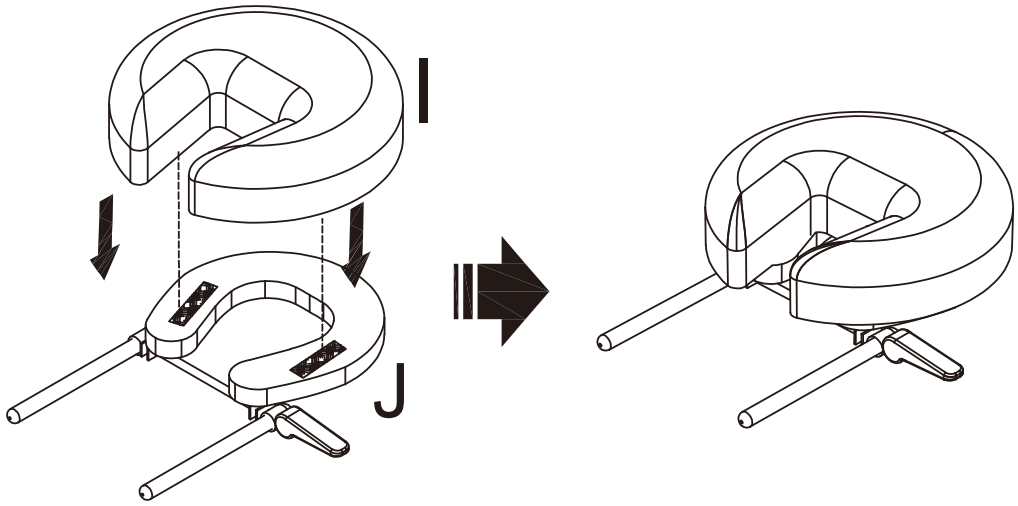

STEP 6

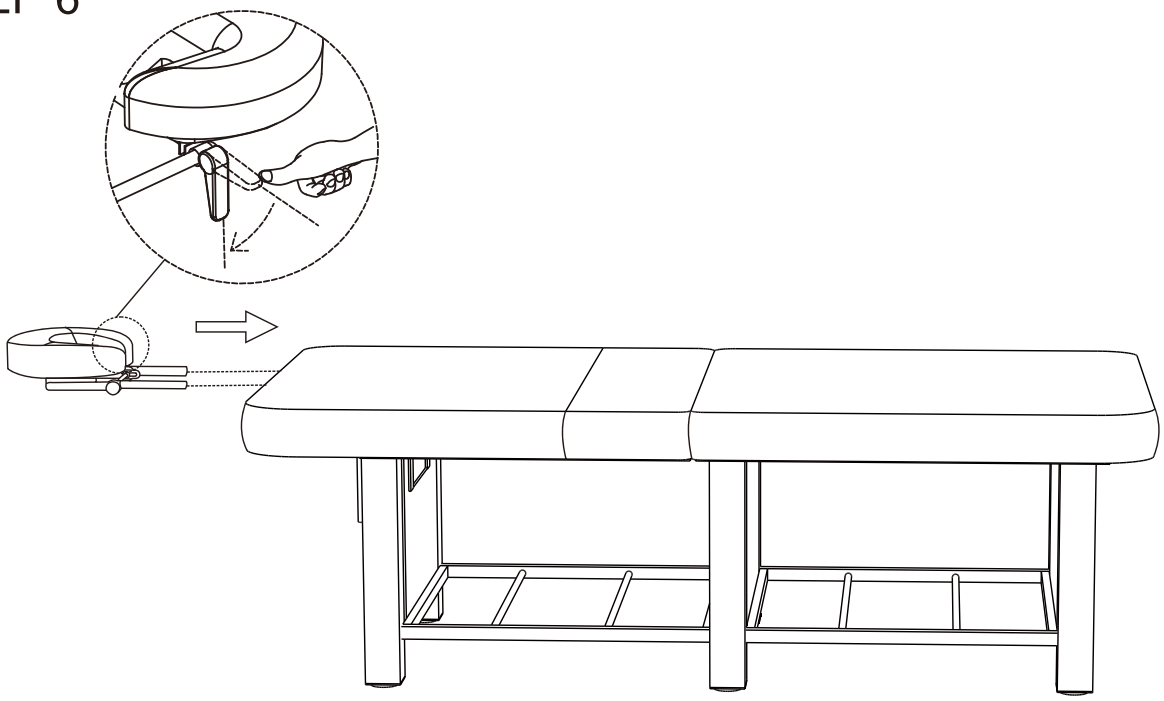

STEP 7

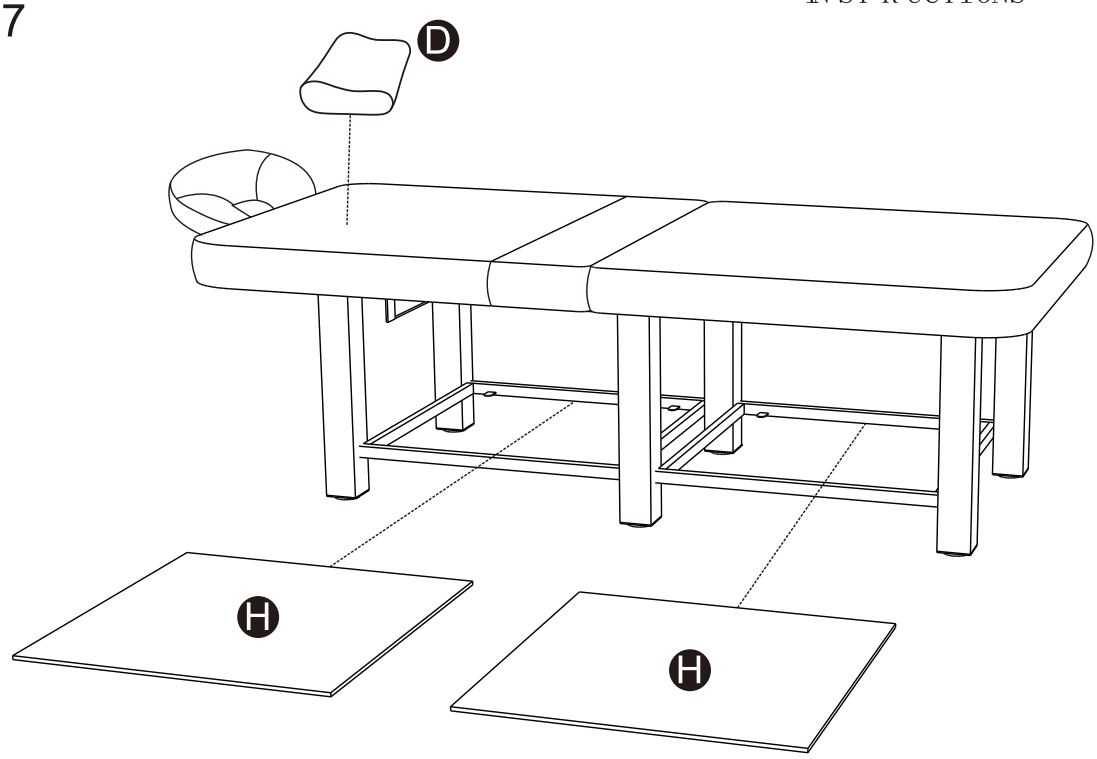

STEP 8

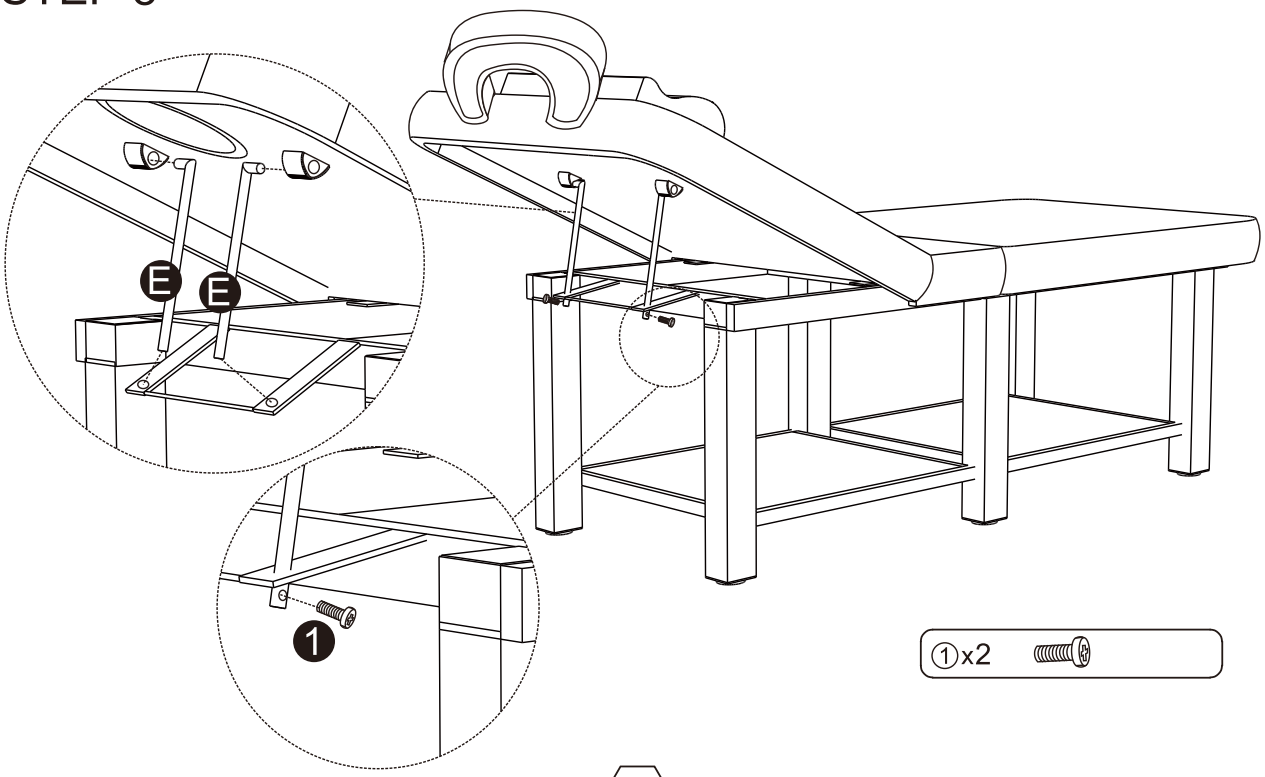

Congratulation:

Congratulations to you on completing the assembly of the product through your own efforts, you have done a great job.
The assembly of this product may have been difficult, but you still had the patience and perseverance to get it done.

Notes:

1. If there are any defective or missing parts after unpacking, please stop assembly and immediately contact us.
2. The product is designed for indoor use only and must be assembled and used according to the provided manual. Modifying or altering the product from its original design may result in personal injury or damage to the product.

Product Maintenance:

1. Please place this item on the level solid ground.
2. Avoid long-term exposure to humid environments to prevent mildew.
3. Keep the product away from high temperature environments or fire sources.
4. If accidentally spill water or another liquid on the surface, immediately wipe with a dry towel.
5. Regularly inspect the tightness of screws while using the product. If necessary, re-tighten to ensure structural stability.