SIMPLIHOME

Warm Shaker / Norfolk / Lexington

60W Writing Desk with Drawers

Model # AXWSH01060-XXX

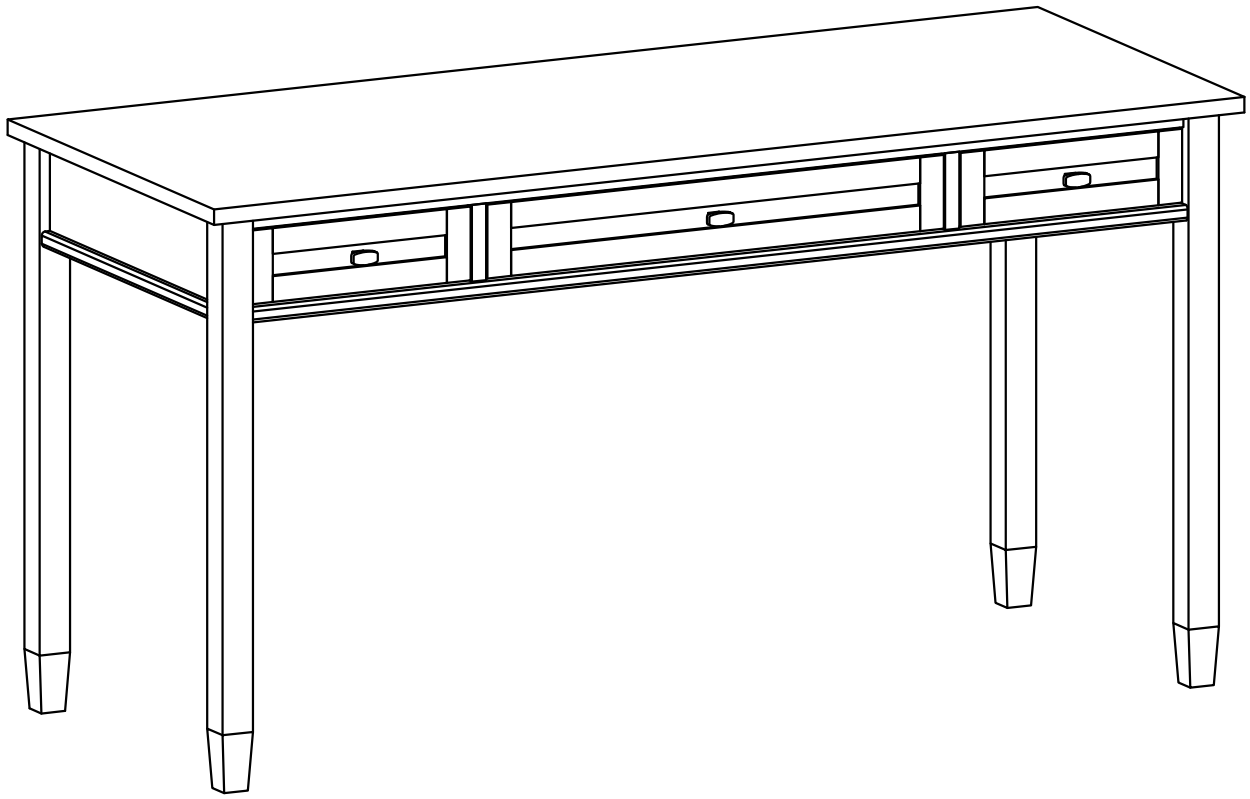

brooklyn + max™ Wynden Hall™ Home Decor

SIMPLIHOME

Claim Your Free Gift

Your opinion pays: Earn a gift!

Review your purchase and receive a gift.* It could be a gift card, Simpli Rewards points, or another special reward.

CLAIM YOUR REWARD NOW! ▶

simpli-home.com/get-free-gift



**Offer valid for reviews posted within 30-days of purchase.*

SIMPLIHOME

Need Help With Assembly?

Assembly made easy: book a Tasker!

We've teamed up with Taskrabbit for furniture assembly.* Choose your service, check out, and a background-checked Tasker will build it for you at a fixed, upfront price.

1. Scan the QR code or visit the link below.
2. Add your assembly service to the task cart.
3. Check out and schedule a time that suits you.

BOOK A TASKER NOW! ▶

simpli-home.com/assembly

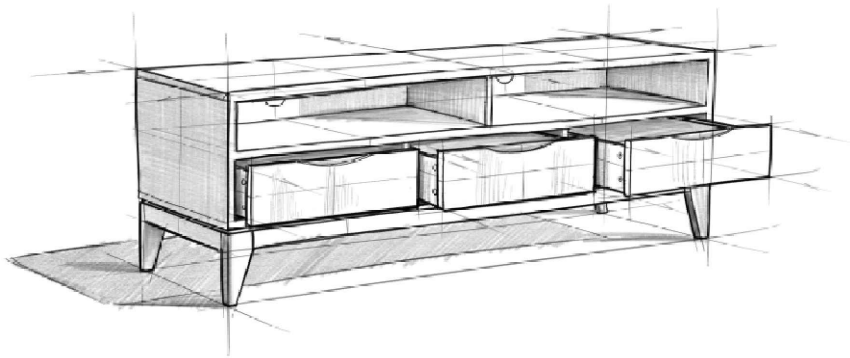

**Taskrabbit is an independent third-party service.*

SIMPLIHOME

For Fastest Customer Service:

1. Open your phone's camera.
2. Point your phone's camera at the QR code to scan.
3. Click on the pop up.
4. You'll be taken to our customer service page.
5. Fill the form with your order information and issue.
6. Submit form.
7. A customer service associate will contact you.

Other ways to contact us…



Email Us

customerservice@simpli-home.com



Visit Us

Visit our site directly at
www.simpli-home.com



Call Us

1-866-518-0120
Monday to Friday
9am to 5pm EST

***If you've purchased from a retailer and you wish to return the product, please contact the retailer directly.**

IMPORTANT : Please read this manual carefully before beginning assembly of this product. Keep this manual for future reference.

Safety Information

Identify all the parts and hardware. Do not discard of the packaging until you have checked that you have all of the parts and hardware required. Hardware package may have spare parts.

WARNING: This item contains small parts which can be swallowed by children and pets. Keep children and pets away during assembly. To avoid danger of suffocation, always keep plastic bags away from children and pets. We recommend that you assemble this unit on a carpeted floor to avoid scratches. If using power tools, set the tool to low torque to avoid damage.

May require 2 people for ease of assembly.

Care & Maintenance

This furniture is designed for indoor use.

Perhaps the greatest environmental damage to wood furniture comes from wide swings in relative humidity (RH) in our homes. Wood absorbs and desorbs water as relative humidity rises and falls, and in doing so it swells and shrinks. Making matters worse, it expands and contracts unequally along different grain directions. As humidity changes, the components of wooden objects are continually pushing and pulling against each other. This pressure often results in parts of furniture no longer fitting together closely or becoming distorted or breaking from their own internal stresses.

The response to relative humidity changes begins with determining the annual average RH for your particular space. Then try to keep the RH in the space where your furniture is as close to that average as possible, generally within about 10% up or down. De-humidify in the summer and humidify in the winter.

Be aware that raising the temperature lowers the humidity and vice versa. Thus, modern heating systems, which can drive down interior RH in the winter, almost invariably cause problems for furniture. To counteract their effect, you can either modify the RH by keeping furniture containing spaces cooler in the winter or most importantly, have a good working humidifier for your home. A humidistat automatically works to balance the humidity in your home so it is constant. Dry indoor air can suck enough moisture from its surroundings to do permanent damage to wood, causing it to crack or split.

Remember, that not all woods are created equal. Two factors that help determine how rapidly a wood will lose moisture are pore size and surface hardness. A piece made from a dense and hard wood will dry less rapidly than pieces made from softer woods.

Furniture that is sealed and lacquered will lose moisture more slowly than an unfinished piece while pieces with veneer finishes are not only stronger but lose moisture more slowly than other finishes.

To help protect your wood furniture, take these steps:

- Use a humidifier, preferably one with an automatic control system that can sense the humidity level and adjust itself accordingly
- Don't over-humidify; that can damage wood by causing it to expand and contract
- Keep furniture out of direct sunlight, which can cause it to dry out, crack and warp
- If you can avoid it, don't put furniture near heating vents; if you can’t, keep the item 3 to 4 inches away from the wall, giving the heat and air space to circulate
- Dust with soft dry cloth
- Do not use liquid or aerosol products
- To avoid marking, do not place rubber on surface (foot pads, etc.)
- For soil build-up, wipe with damp cloth & dry
- Do not use abrasive cleaners

Pre-Assembly Information

Part Description

A

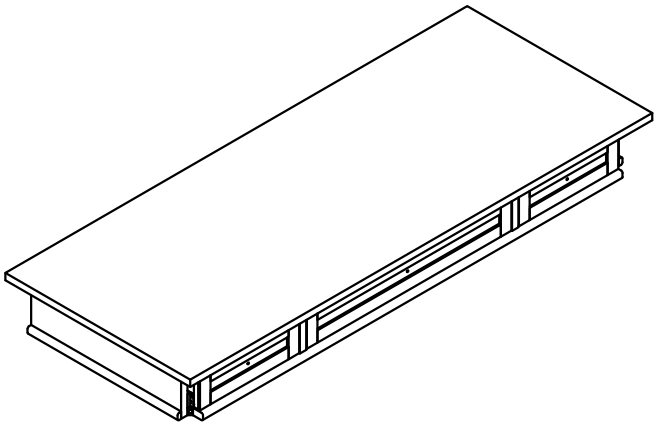

TOP
QTY 1

B



LEG
QTY 4

Hardware Description

1

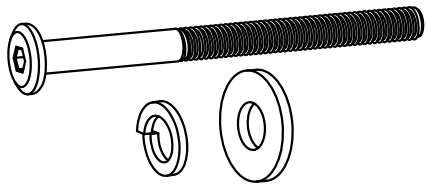

ALLEN KEY BOLT: M6 X 80 mm - QTY 8
LOCK WASHER: Ø10 / Ø6 X 1.5 mm - QTY 8
WASHER: Ø16 / Ø6 X1 mm - QTY 8
QTY 8 SETS

2

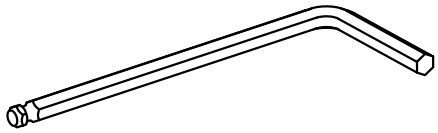

ALLEN KEY
QTY 1

3

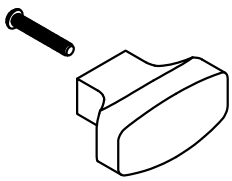

HANDLE
a. M4 X 22 mm - QTY2
b. M4 X 35 mm - QTY1
QTY 3 SETS

4

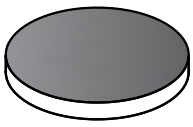

FELT PAD
QTY 4

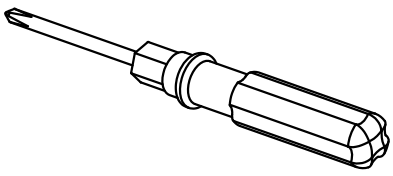

Required -
Phillips screwdriver
Not Included

Components - Key Diagram

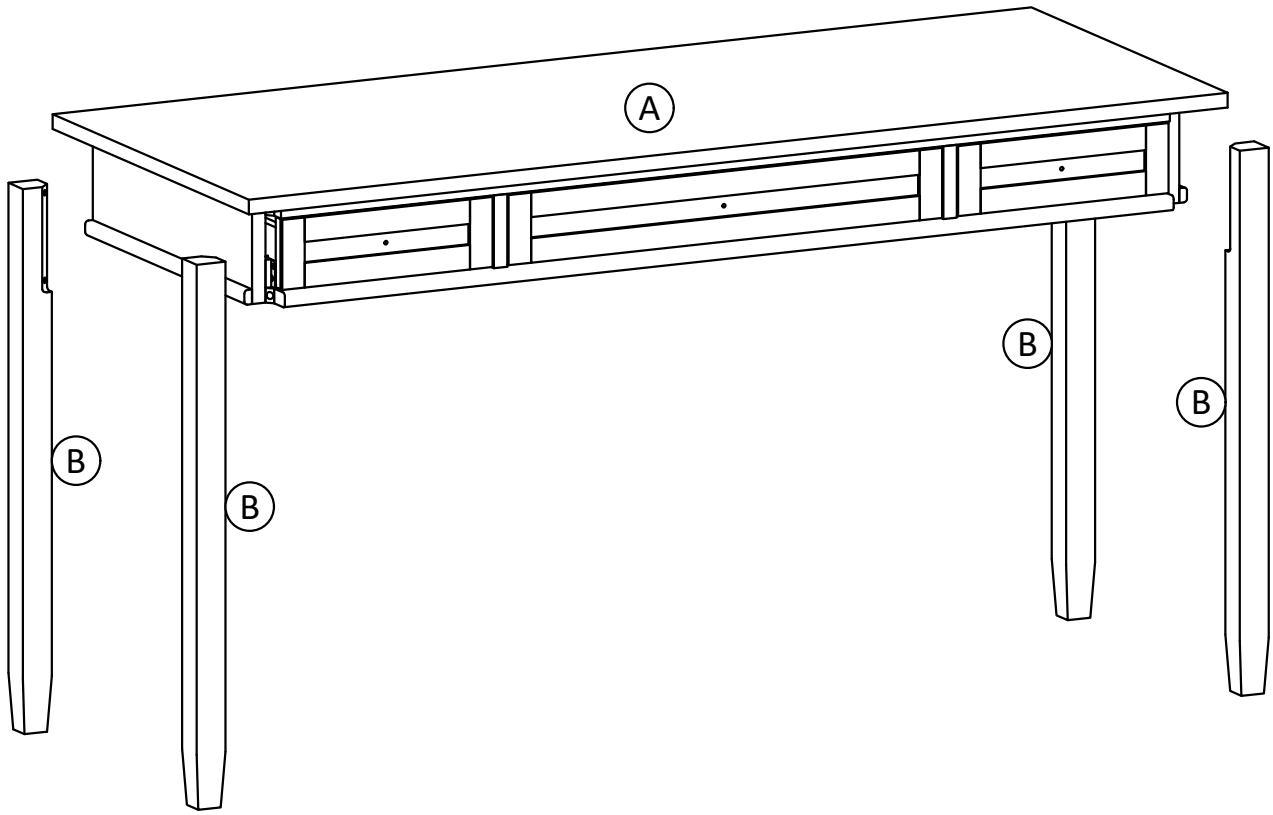

Assembly

Step 1

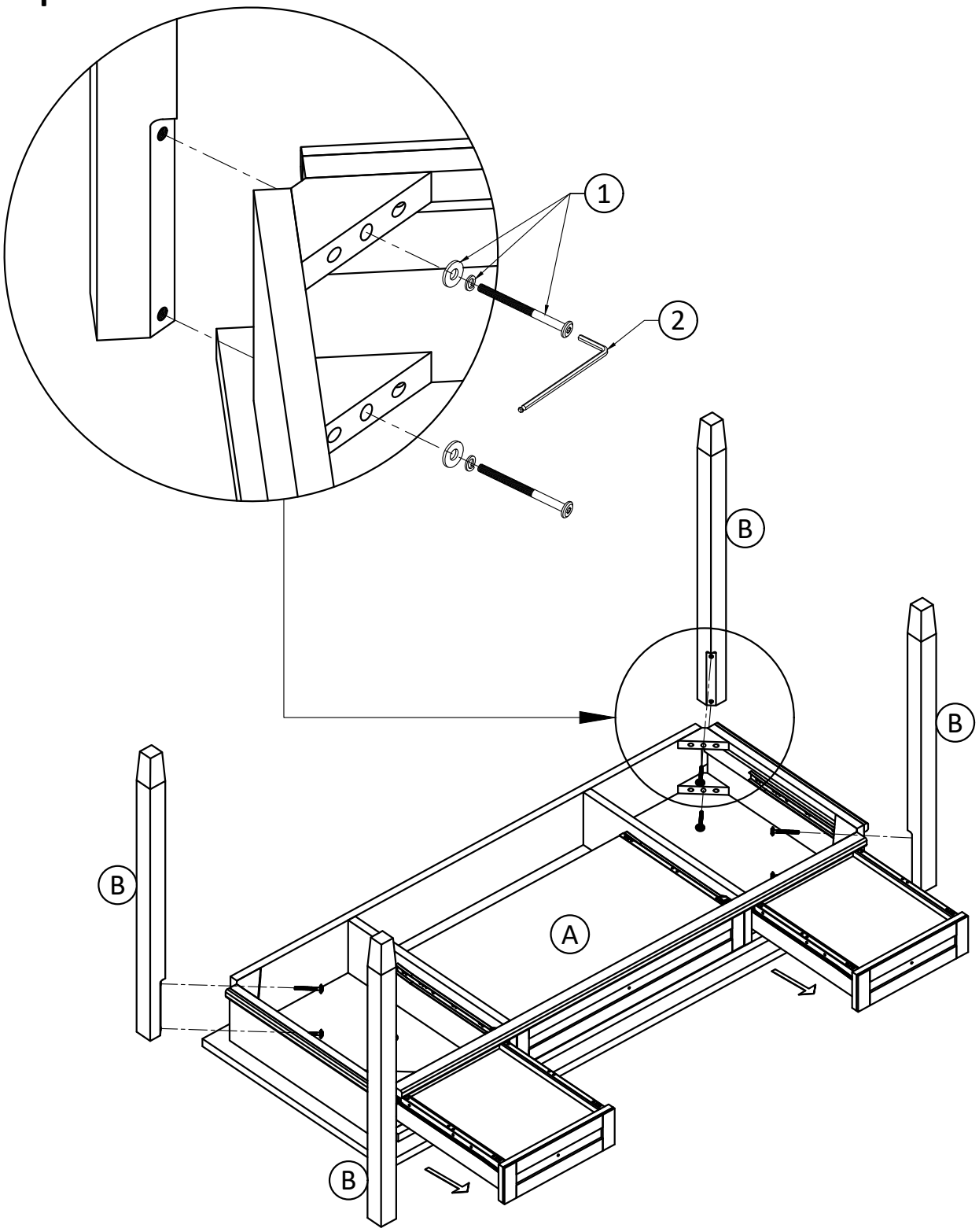

1. Remove the drawers from to compartment.
2. Attach Legs (B) to Top (A).
3. Use eight sets Allen Key Bolts, Lock Washers and Washers (1) to secure Top (A) and Legs (B) (two sets on each Leg).
4. Use Allen Key (2) to tighten Allen Key Bolts. Do not over-tighten.

Assembly

Step 2

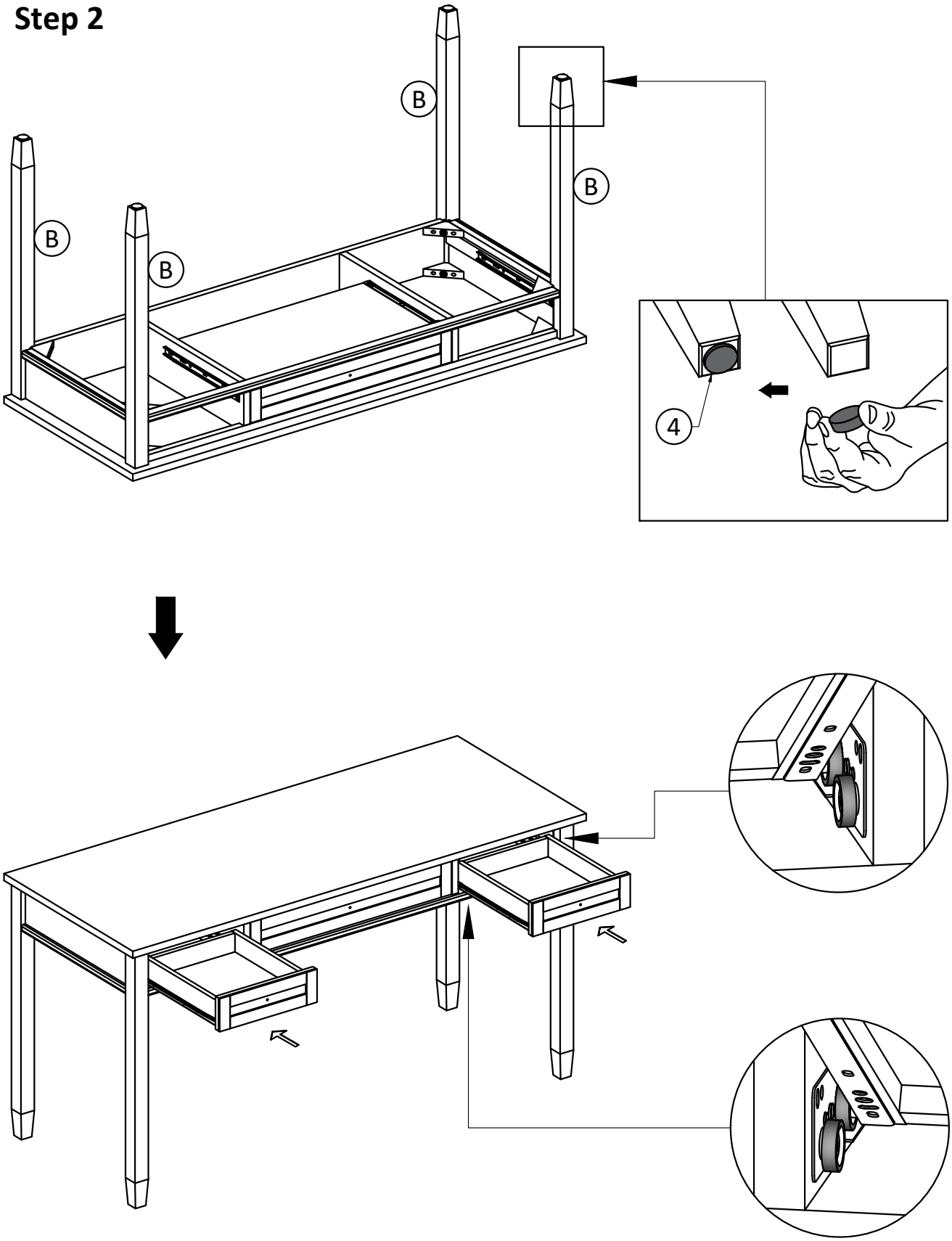

1. Attach the a felt pad ④ to the bottom of each leg.
2. Insert assembled drawers into glides on assembled Desk.

Assembly

Step 3

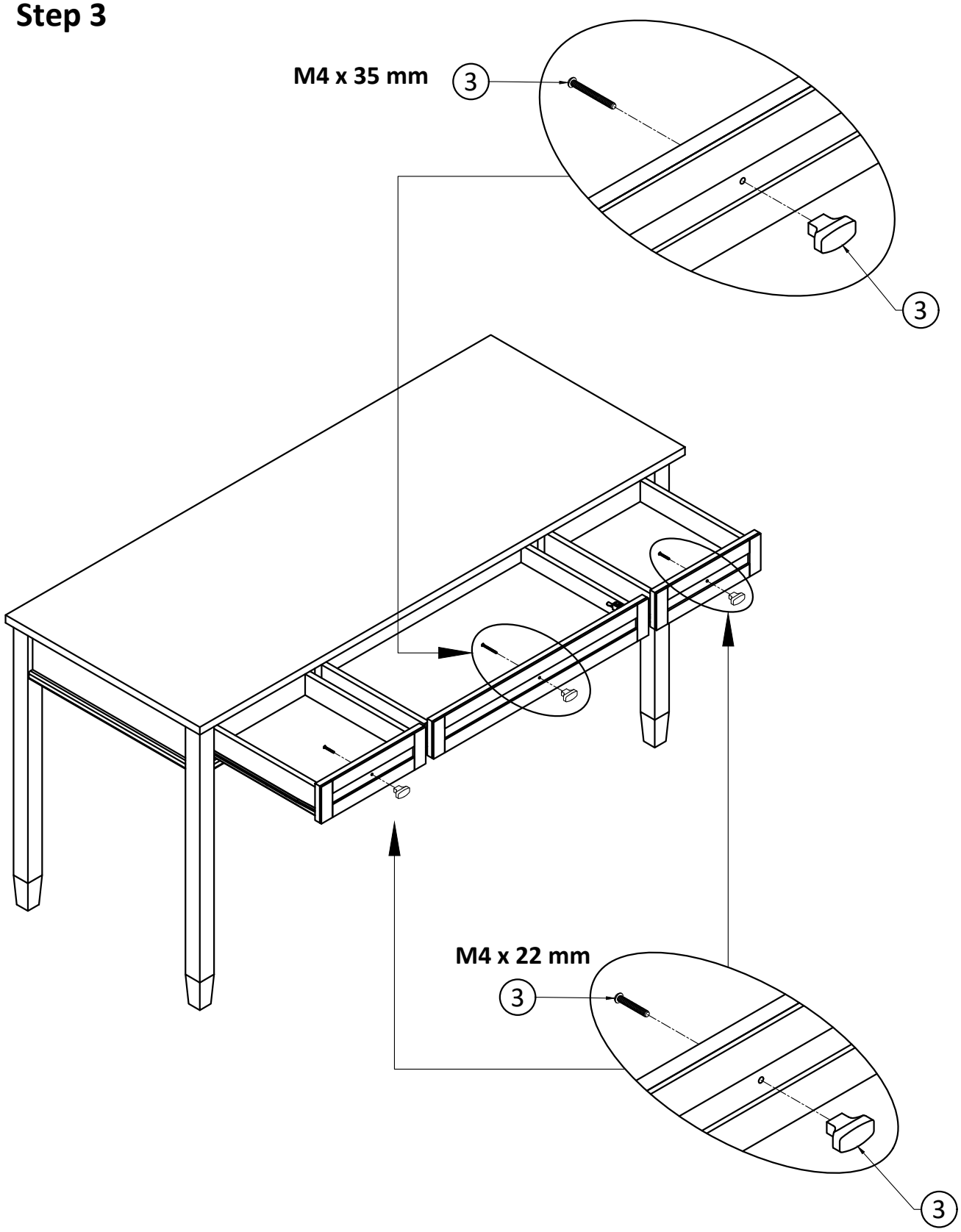

1. Attach three Handles (3) to the Drawer Fronts of the Top (A).
2. Use Phillips screwdriver to tighten bolts. Do not over-tighten.

Assembly

Step 4

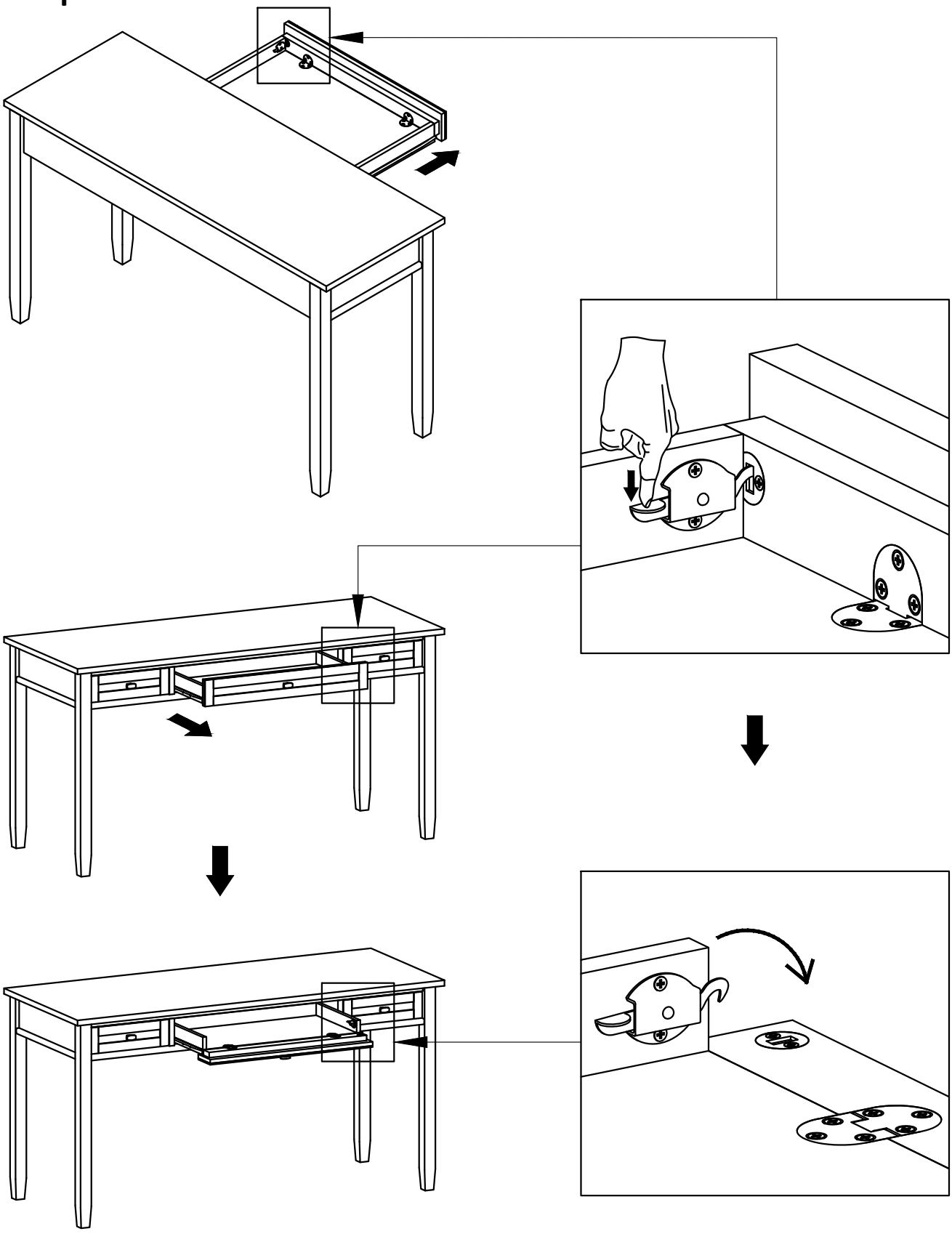

1. **YOU MUST** press the lock on the right of the flip down keyboard tray before opening.