ASSEMBLY INSTRUCTION

Thank you for purchasing this quality product. Be sure to check all packing materials carefully for small parts, which may have come loose during shipment. Identify and countall items and compare with the hardware list shown below.

Please follow below Assembly Instruction step by step

LEFT CHAIR

Hardware List		
NO.	Description	QTY (pcs)
A	Leg 	4
B	AC Adapter 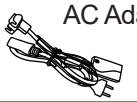	1
C	Y- Cable 	1

All images shown are for illustration purpose only.
Actual product may vary due to product enhancement.

STEP1

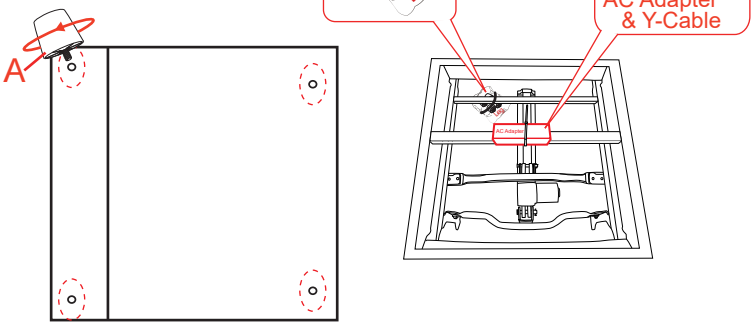

⚠ The A&B&C at the bottom of seat

STEP2

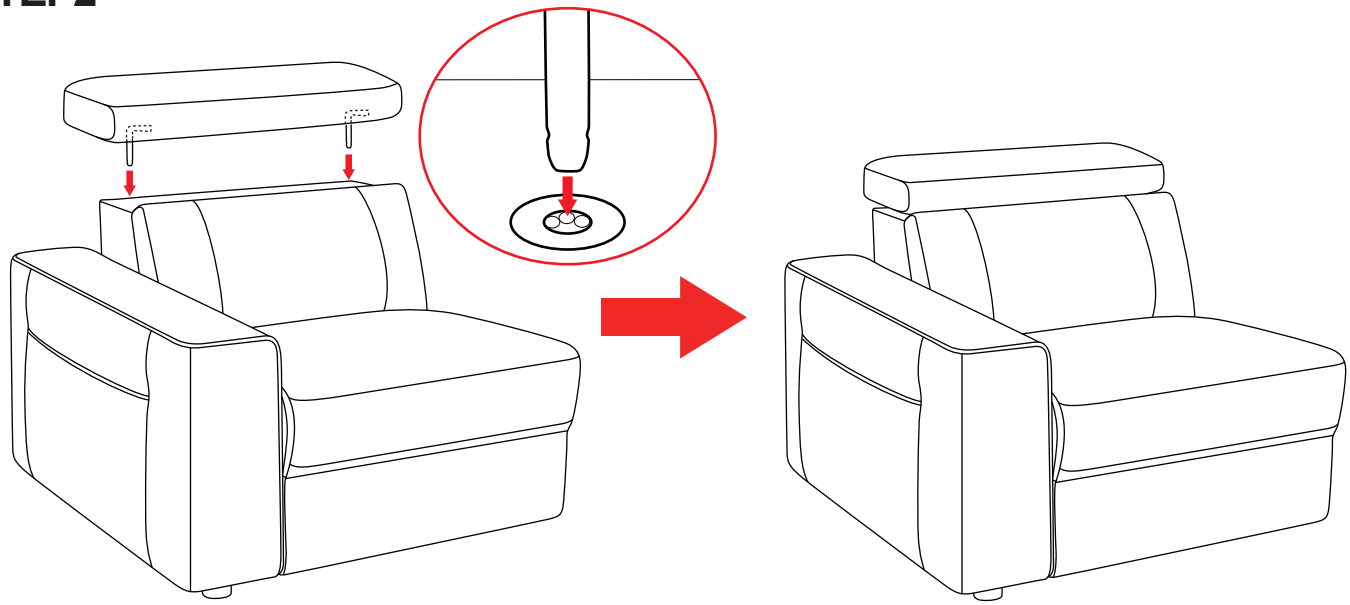

STEP3

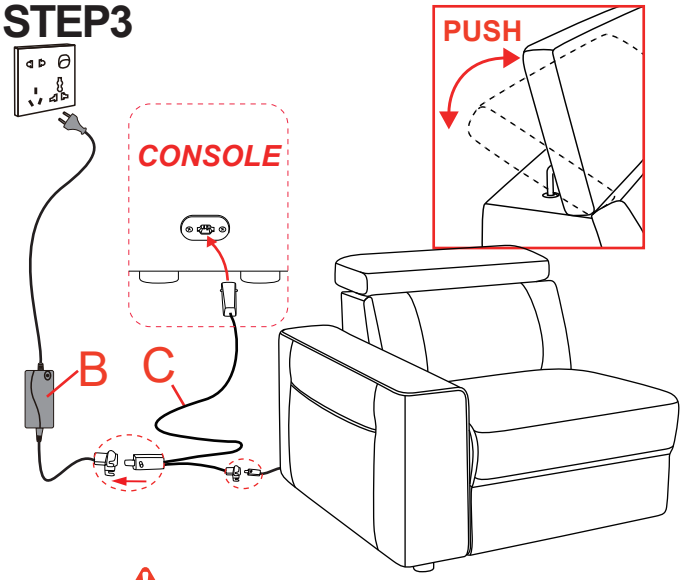

⚠ The AC Adapter at the bottom of seat

MORE

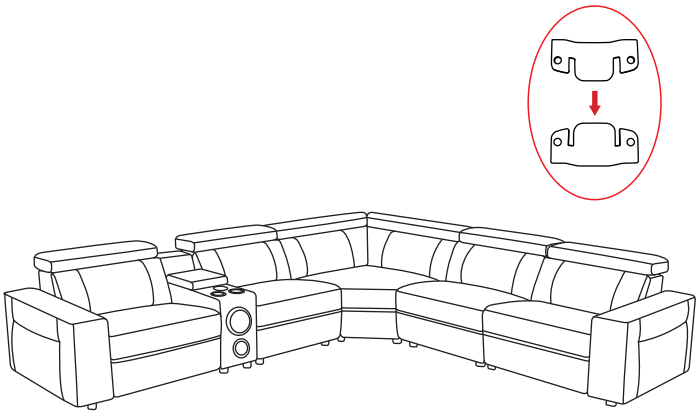

ASSEMBLY INSTRUCTION

Thank you for purchasing this quality product. Be sure to check all packing materials carefully for small parts, which may have come loose during shipment. Identify and countall items and compare with the hardware list shown below.

Please follow below Assembly Instruction step by step

CHAIR

Hardware List		
NO.	Description	QTY (pcs)
A		4

All images shown are for illustration purpose only.
Actual product may vary due to product enhancement.

STEP1

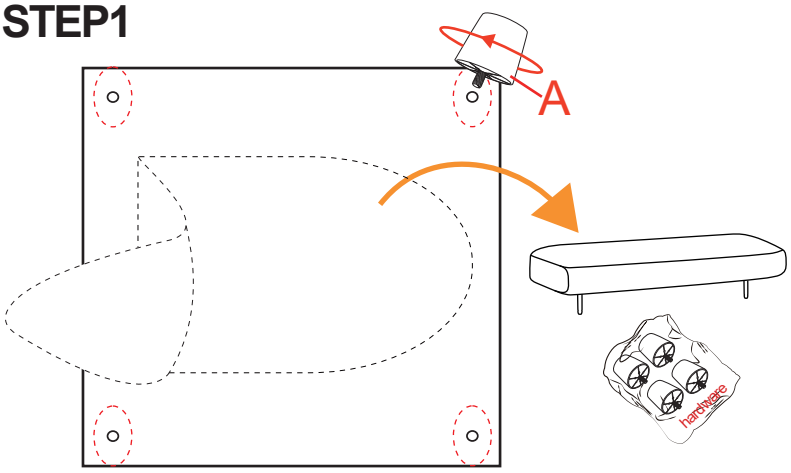

The hardware and headrest at the bottom of seat

STEP2

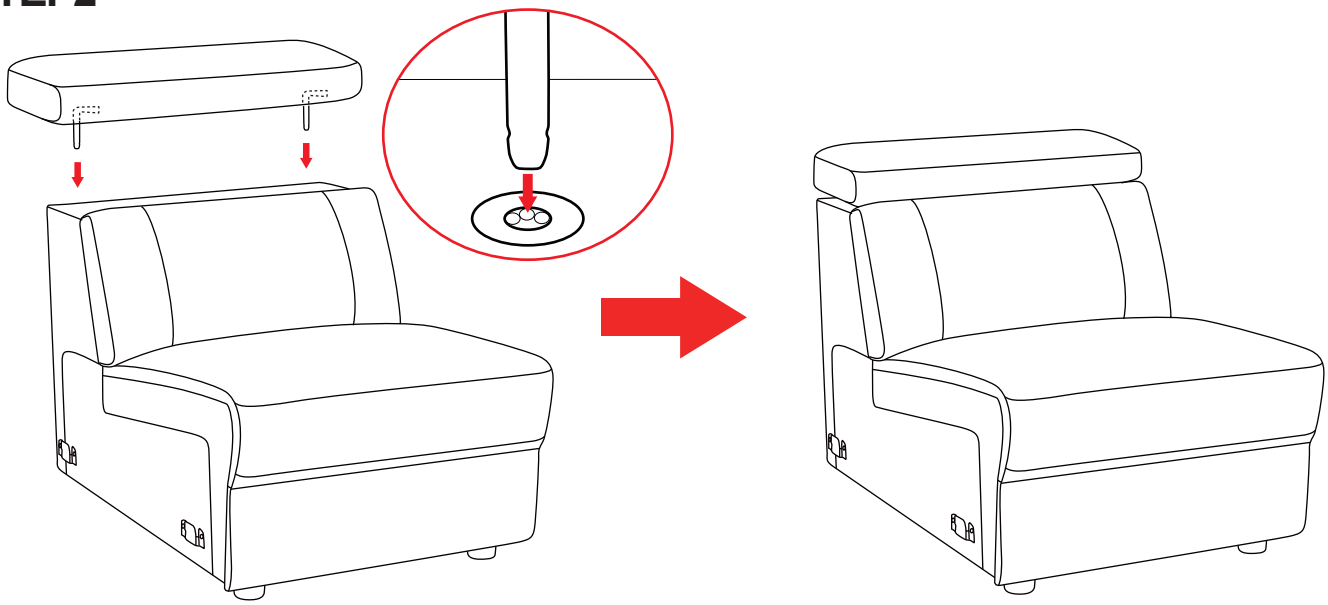

STEP3

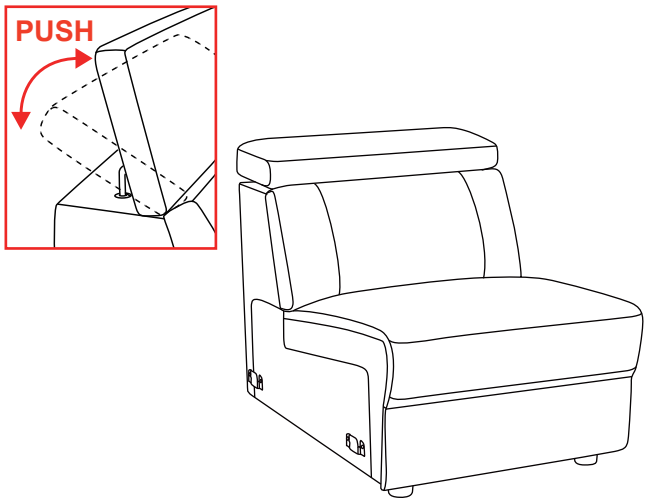

MORE

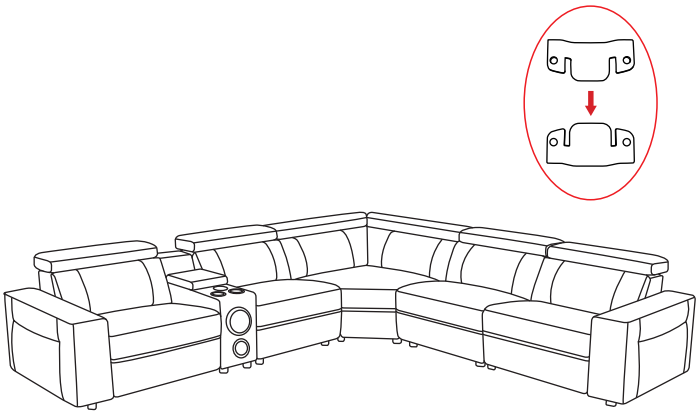

ASSEMBLY INSTRUCTION

Thank you for purchasing this quality product. Be sure to check all packing materials carefully for small parts, which may have come loose during shipment. Identify and countall items and compare with the hardware list shown below.

Please follow below Assembly Instruction step by step

CONSOLE

Hardware List		
NO.	Description	QTY (pcs)
A		4

All images shown are for illustration purpose only.
Actual product may vary due to product enhancement.

STEP1

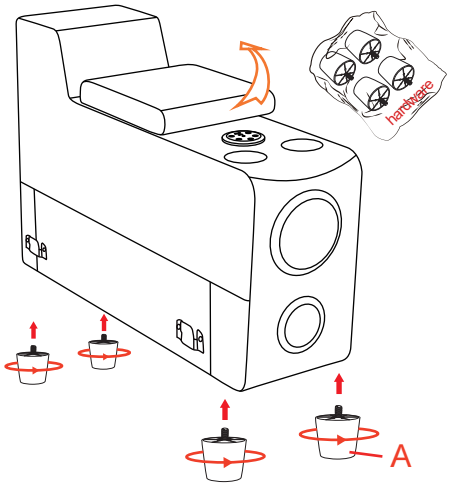

STEP2

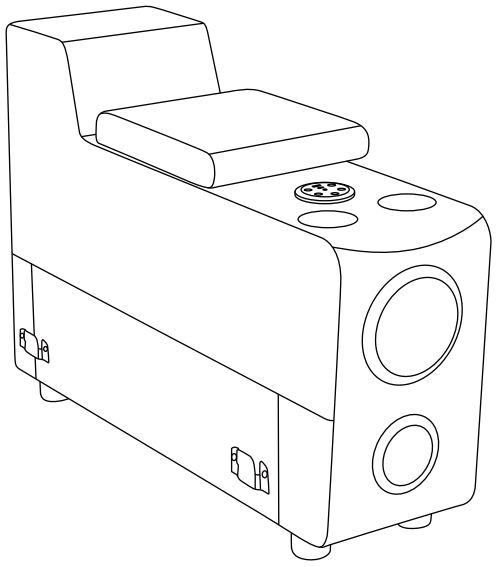

STEP3

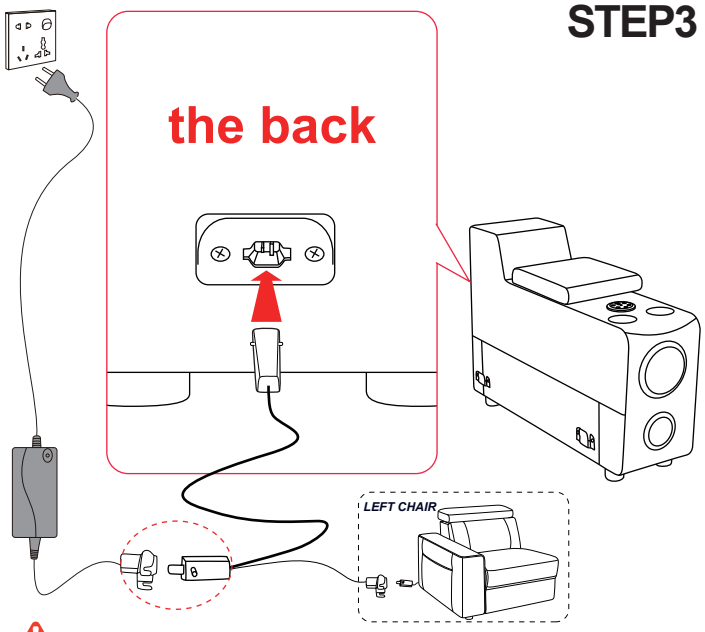

The AC Adapter and Y-cable from another package of LC

MORE

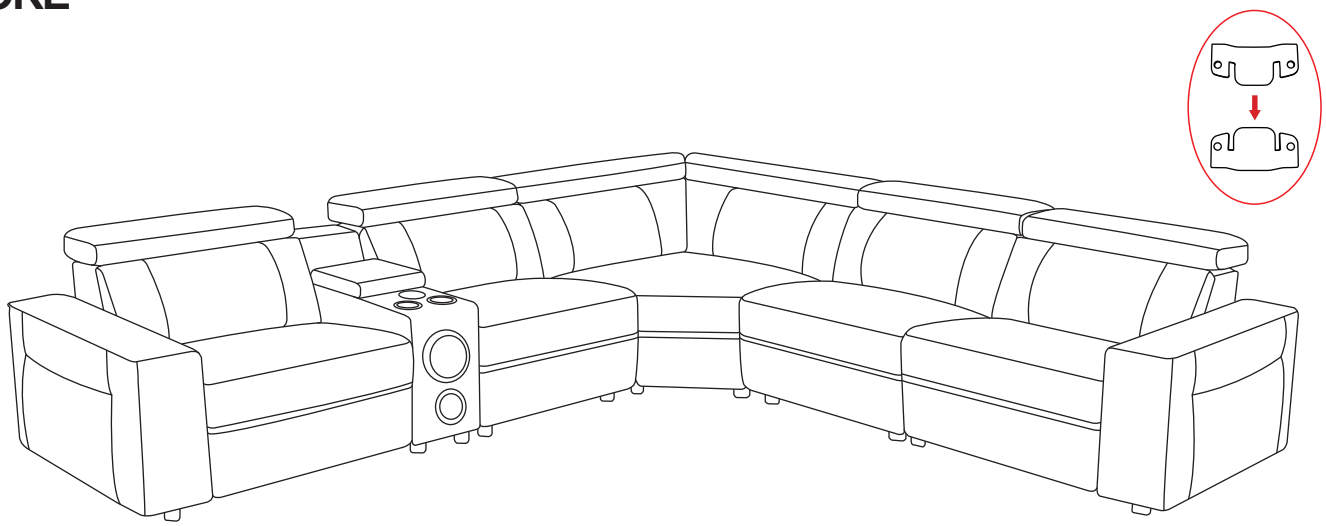

ASSEMBLY INSTRUCTION

Thank you for purchasing this quality product. Be sure to check all packing materials carefully for small parts, which may have come loose during shipment. Identify and countall items and compare with the hardware list shown below.

Please follow below Assembly Instruction step by step

WEDGE

Hardware List		
NO.	Description	QTY (pcs)
A		5
B	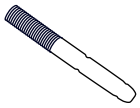	4

All images shown are for illustration purpose only.
Actual product may vary due to product enhancement.

STEP1

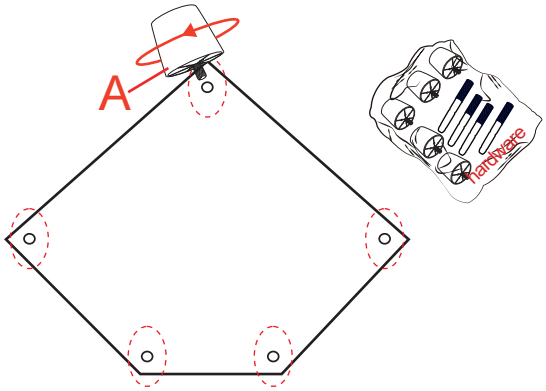

STEP2

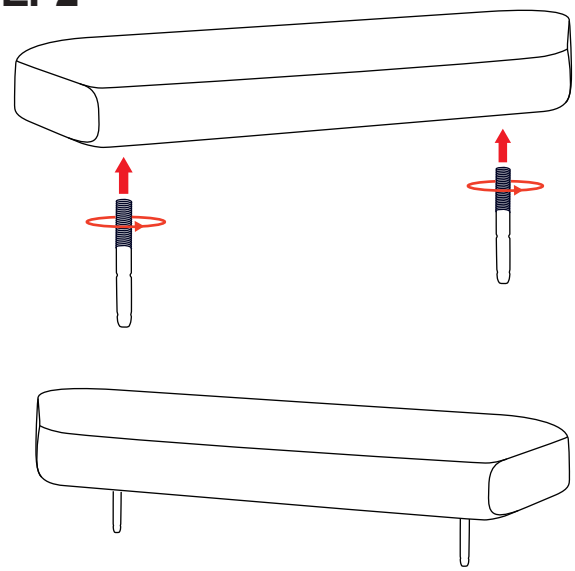

STEP3

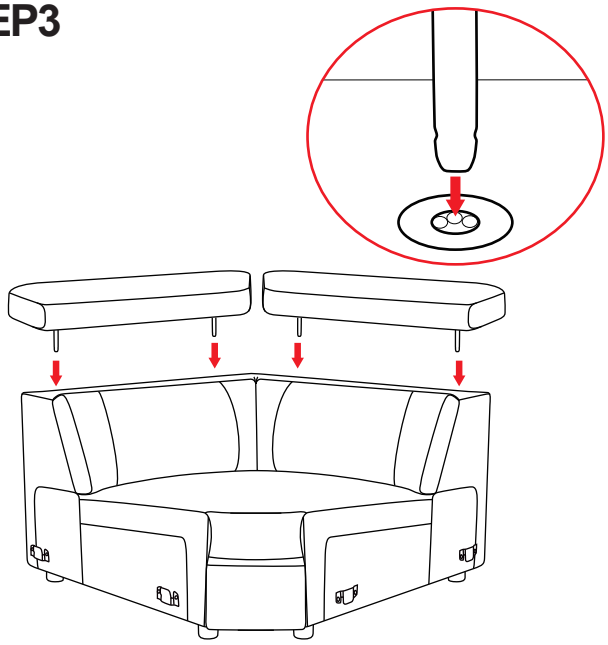

STEP4

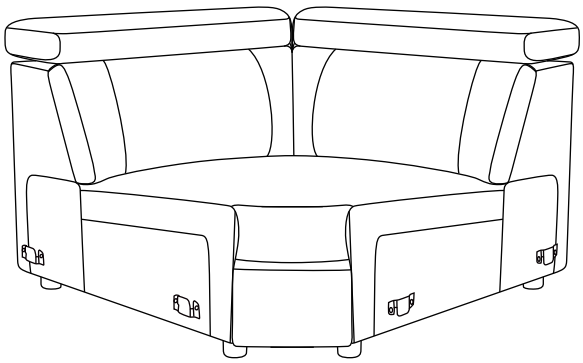

MORE

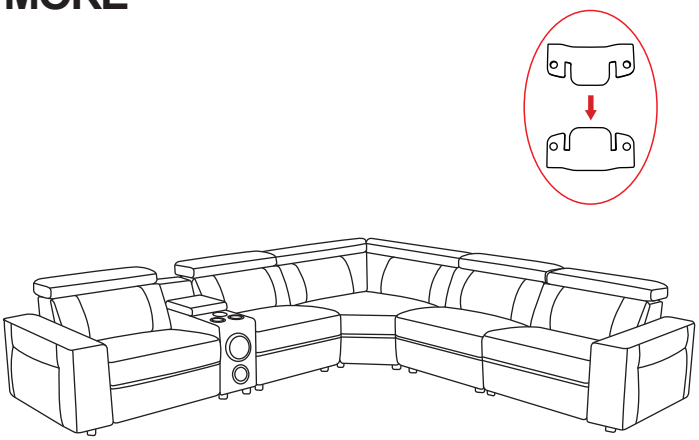

ASSEMBLY INSTRUCTION

Thank you for purchasing this quality product. Be sure to check all packing materials carefully for small parts, which may have come loose during shipment. Identify and countall items and compare with the hardware list shown below.

Please follow below Assembly Instruction step by step

RIGHT CHAIR

Hardware List		
NO.	Description	QTY (pcs)
A	Leg 	4
B	AC Adapter 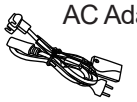	1

All images shown are for illustration purpose only.
Actual product may vary due to product enhancement.

STEP1

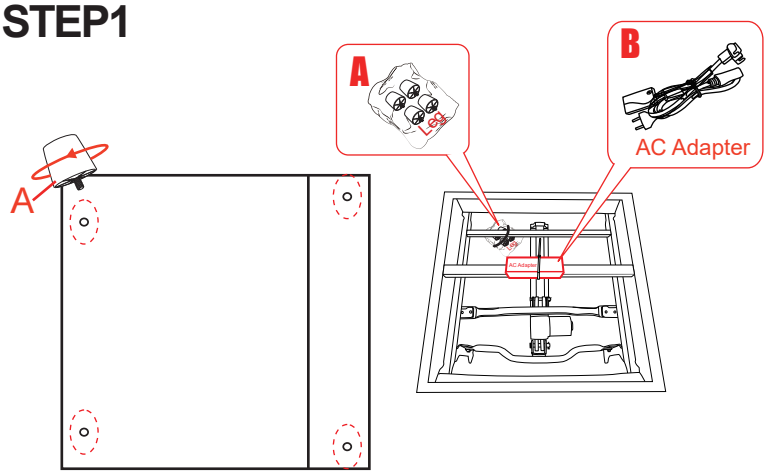

The hardware and AC Adapter at the bottom of seat

STEP2

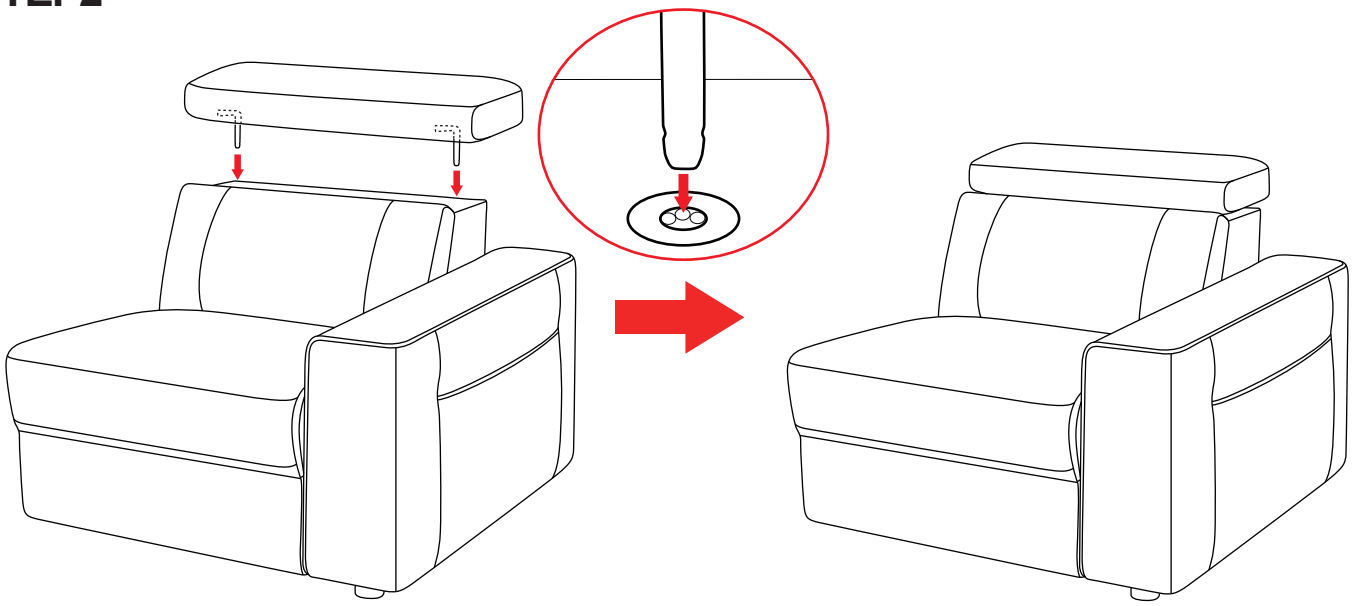

STEP3

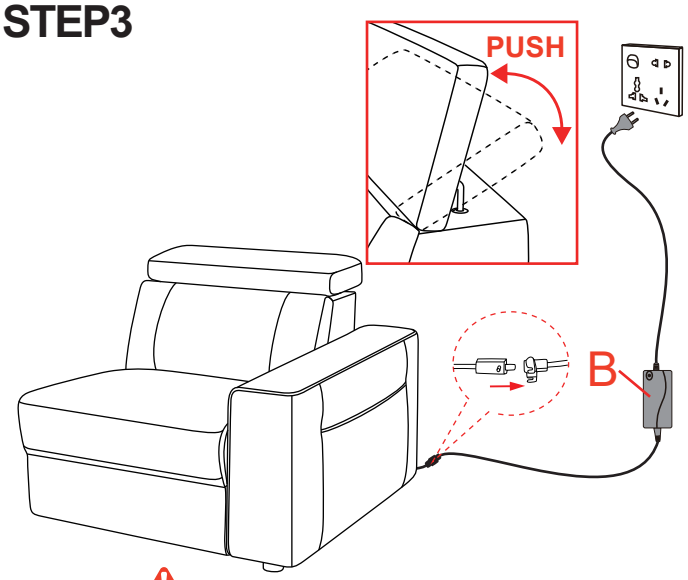

The AC Adapter at the bottom of seat

MORE

