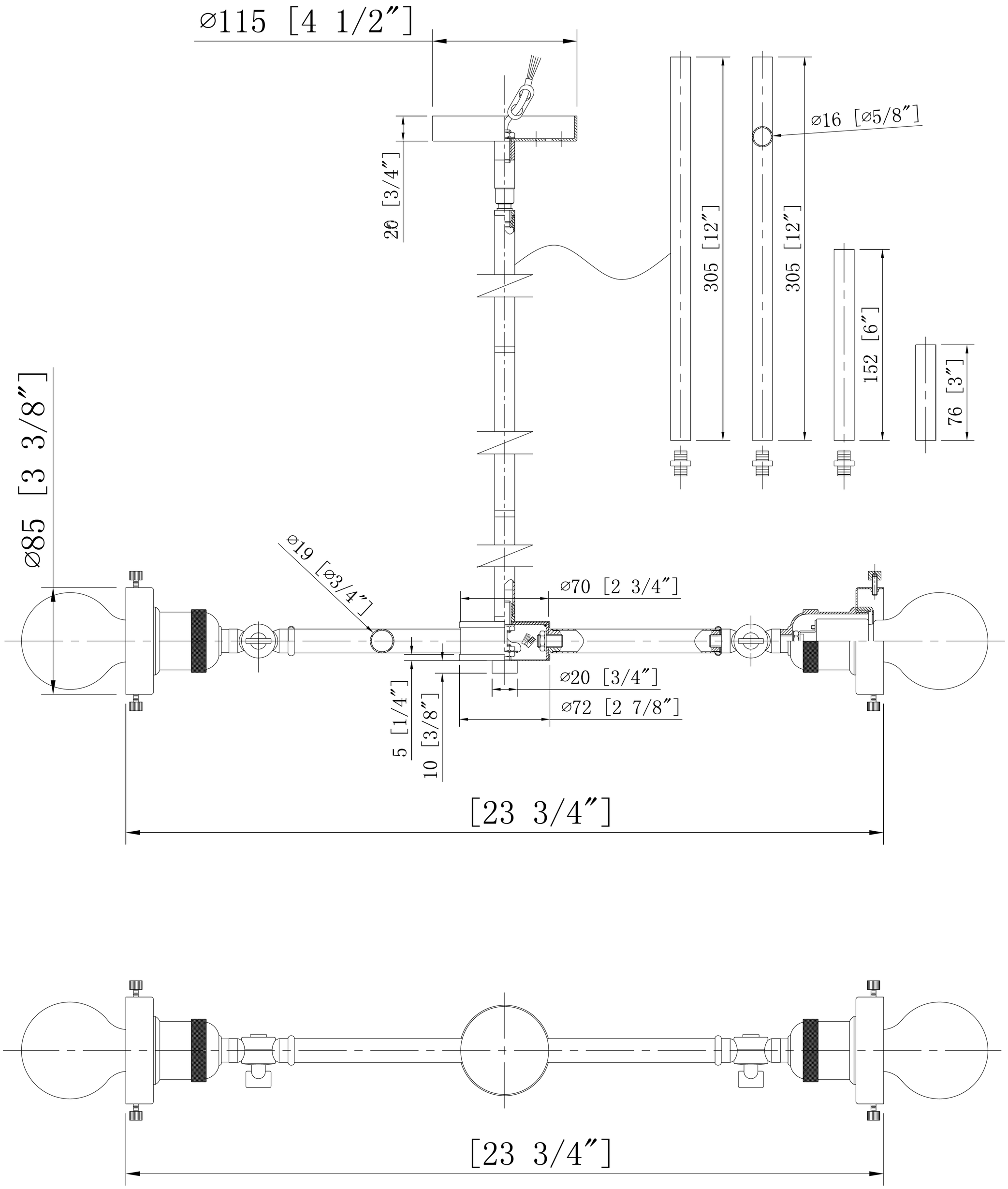

ALL RIGHTS RESERVED AND MAY
NOT BE DUPLICATED WITHOUT OUR
WRITTEN PERMISSION