INSTALLATION INSTRUCTION

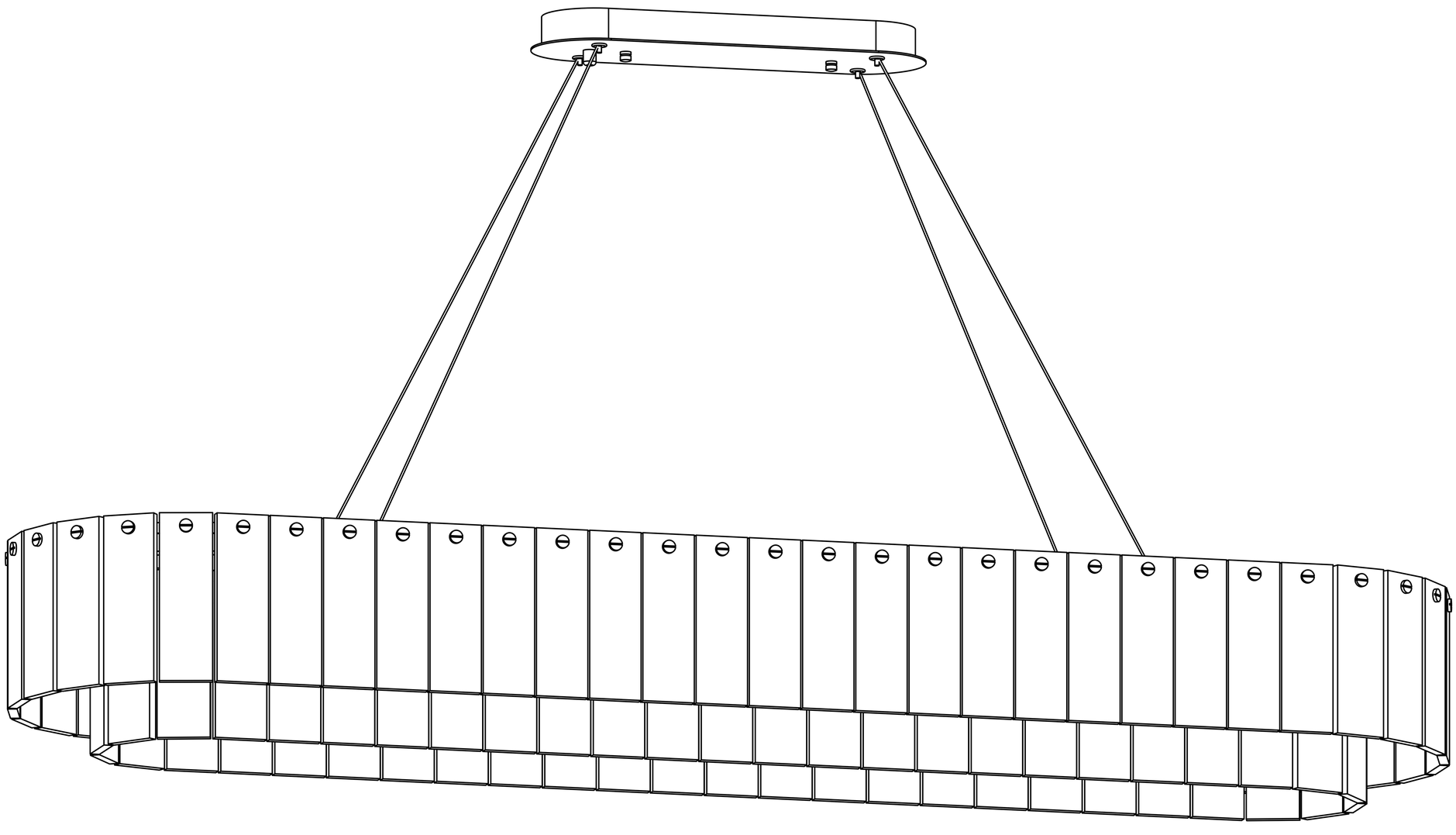

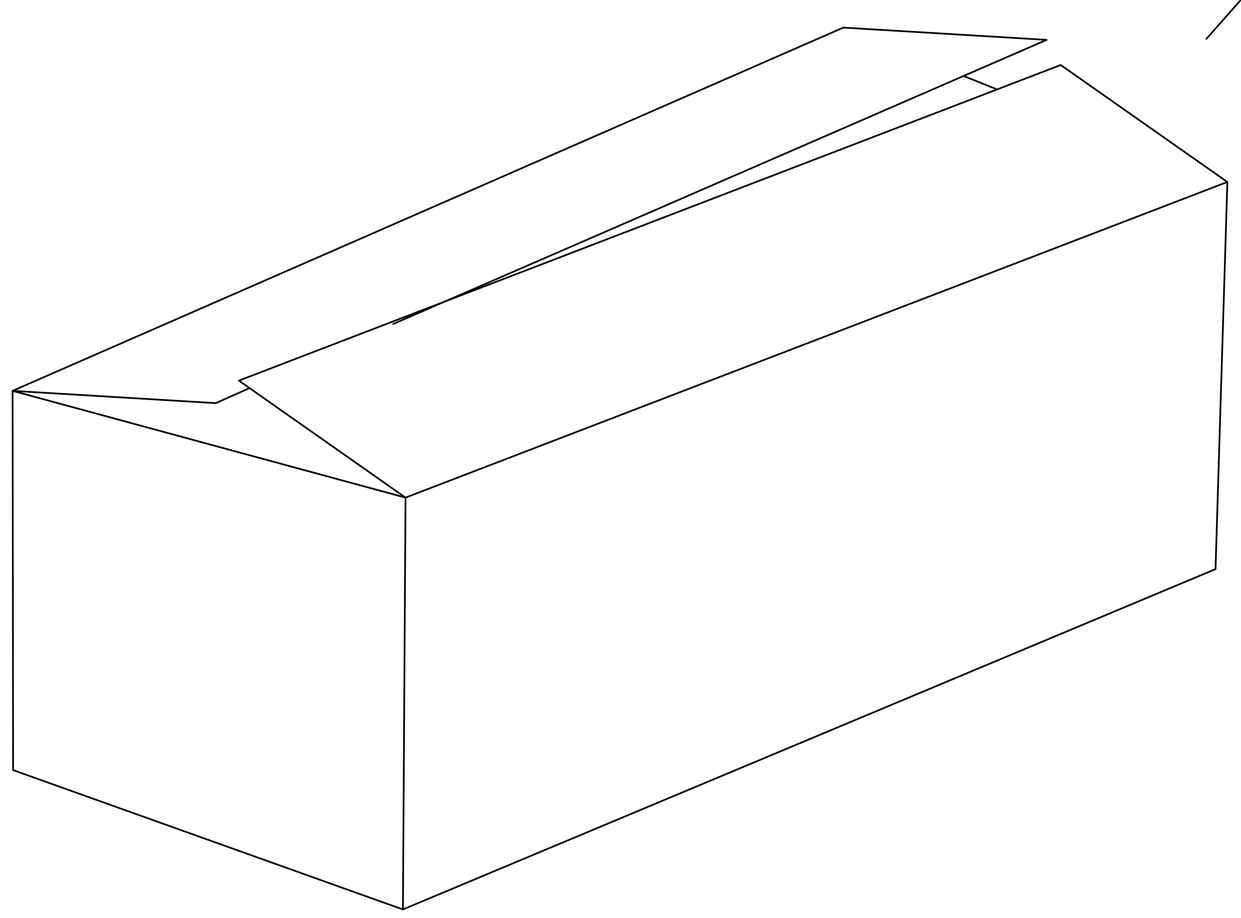

SAFETY INFORMATION

It is important to thoroughly read and understand the entire manual, before assembling, operating.or installing the product.

WARNING

- TURN OFF ELECTRICITY before installation, changing bulbs, or cleaning the light fixture.
- This fixture requires 14 piees G9 bulbs, the maximum watagefior each bulb is 40W, please do not exceed the recommended wattage.
- A QUALIFIED ELECTRICIAN IS RECOMMENDED FOR INSTALLATION.
- Do not use corrosive substances such as gasoline or alcohol disinfectants to wipe the lamps.otherwise it will damage the lamps.

PREPARATION

- Before installation, please make sure all the accessories are included (refer to the package content), if there is any part missing, please contact us at the order page, we will arrange the replacement in a timely manner
- 14 pieces of G9 bulbs(Max. 40W) are required
- For any questions or inquires, please feel free to contact us at the order page, our customer service team will reply ASAP

PACKAGE CONTENTS

A*4

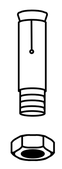

B*3

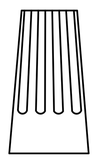

C*110

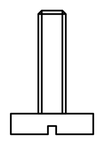

D*60(1)

E*50(1)

F*1

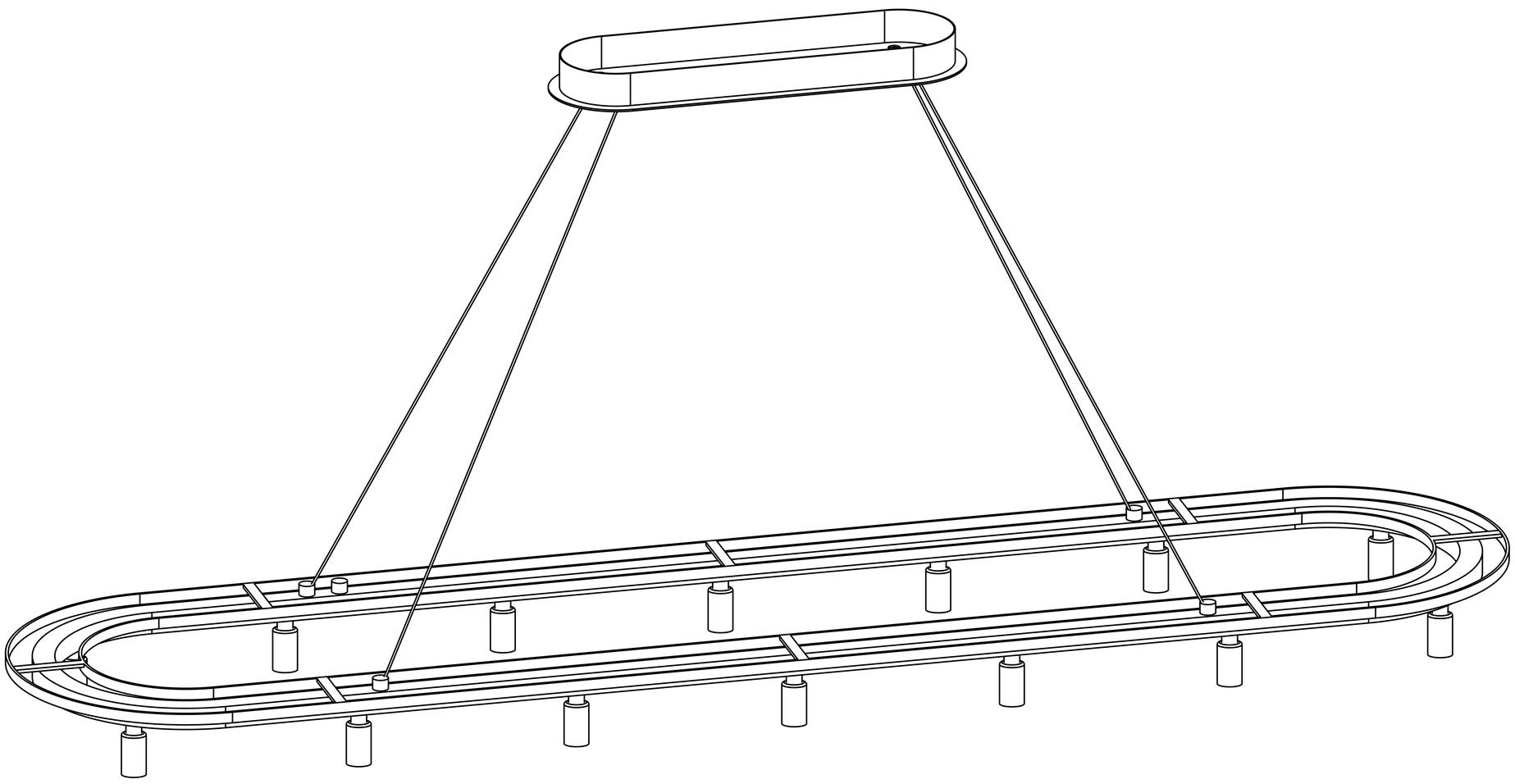

Please note:

Please check the parts list, of the parts are missing during your actual installation, please contact us,we will help you in time!

This manual only shows the installation steps for one size, and the installation methods for other sizes of products are similar.

Now, let’s complete this light together.

Be patient.....

and fully utilize your artistic talent.....

What awaits you after completion is incredible beauty!

Installation instruction

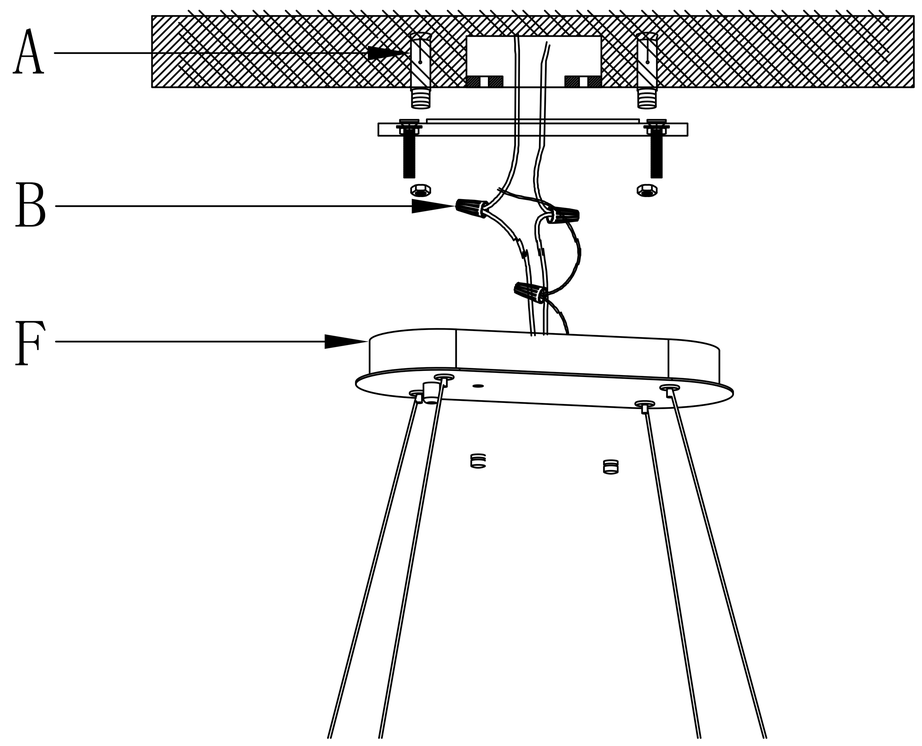

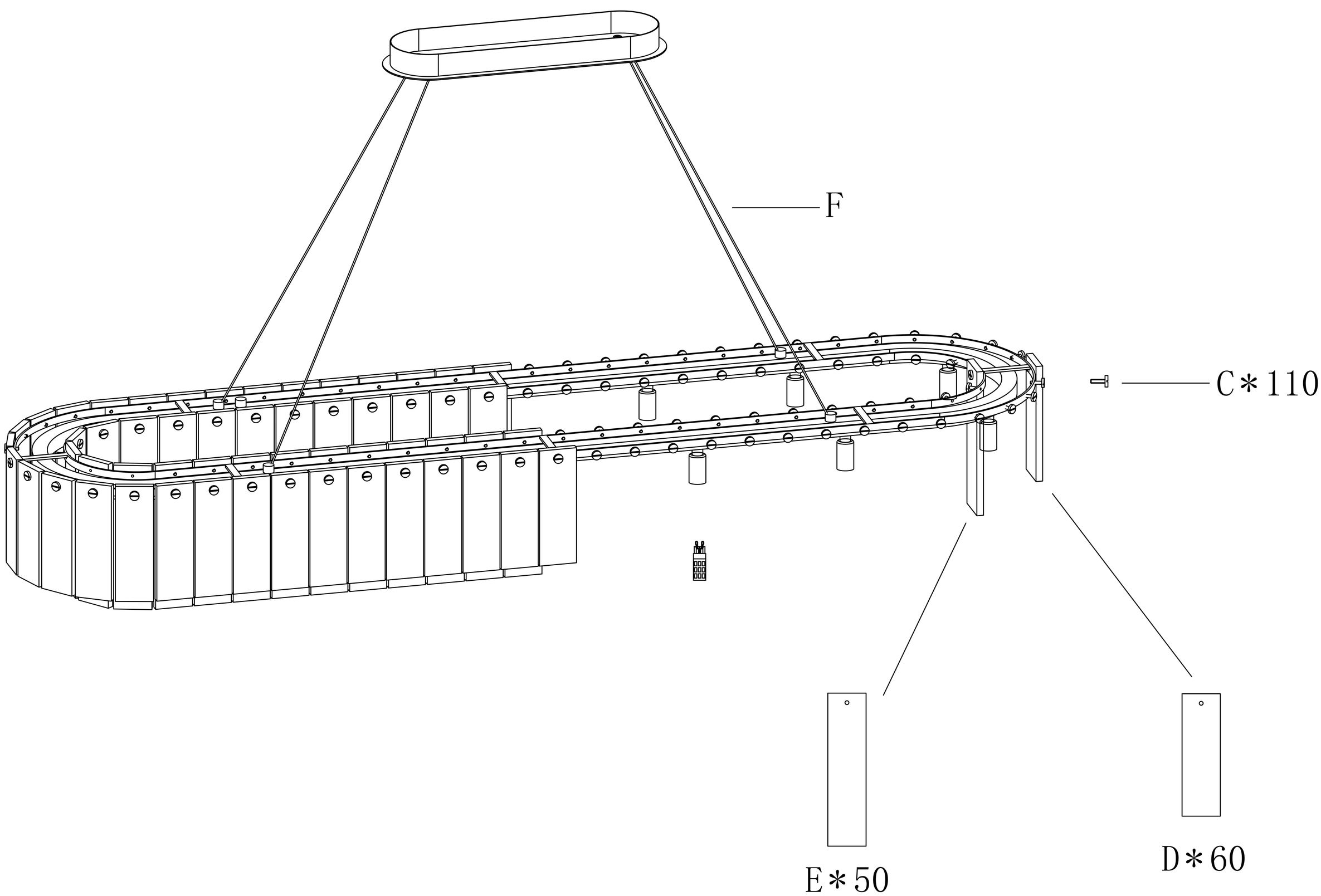

Installation instruction

1. Adjust the length of hanging cable and wire according to your requirement.
2. Take off the mounting bracket from ceiling canopy, and install it on ceiling.
3. Connect amp wires and your house wires together.
4. Install the lamp frame on ceiling.

Step 1

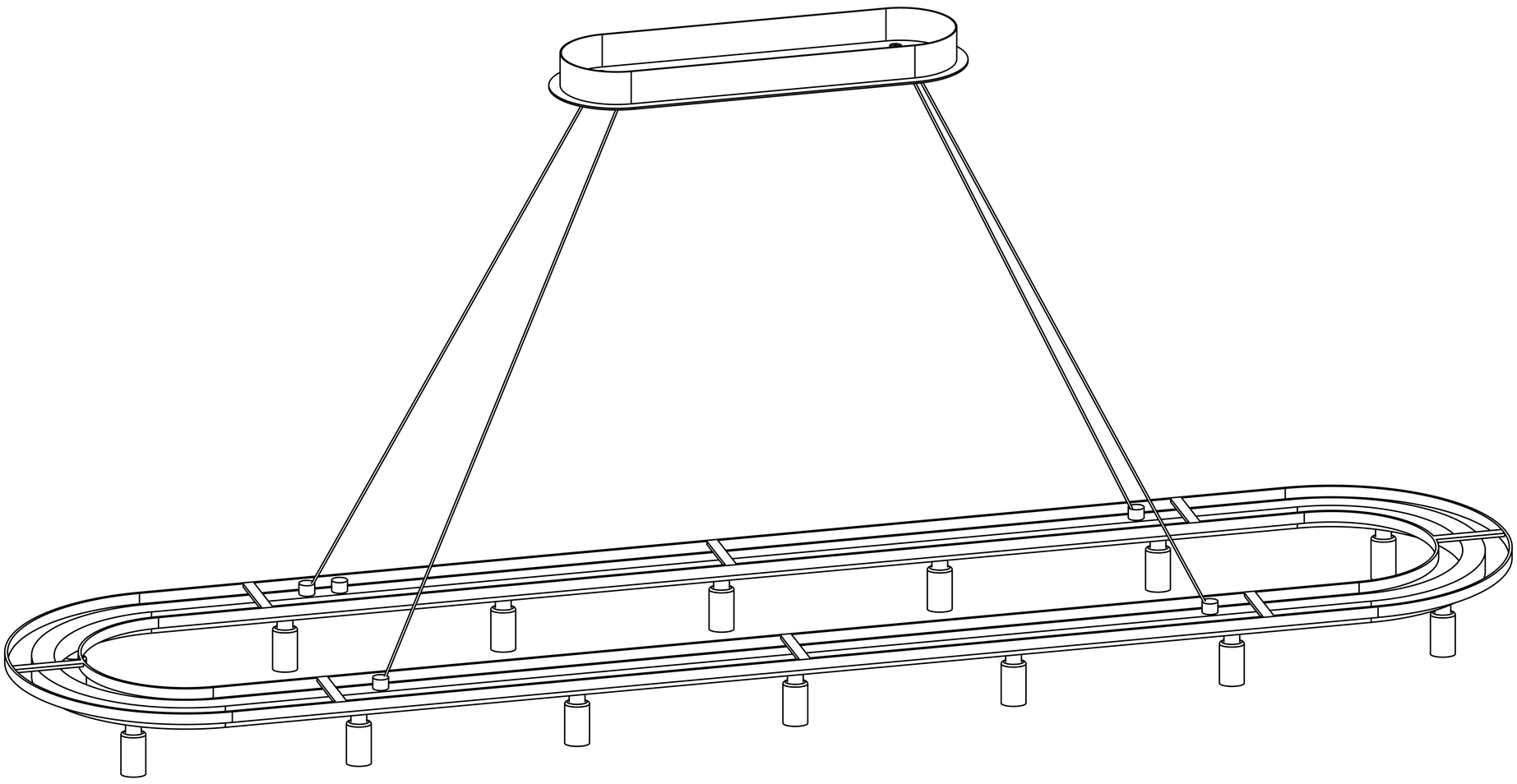

Step 2

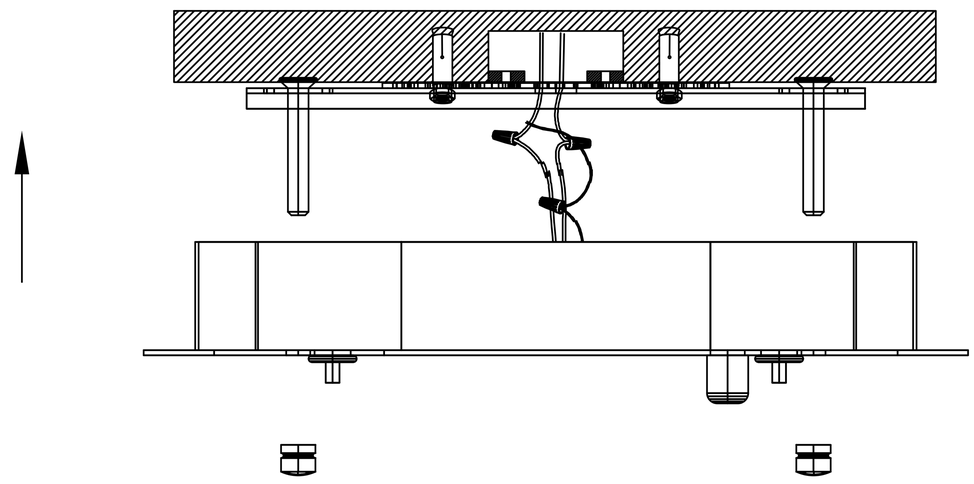

Step 3

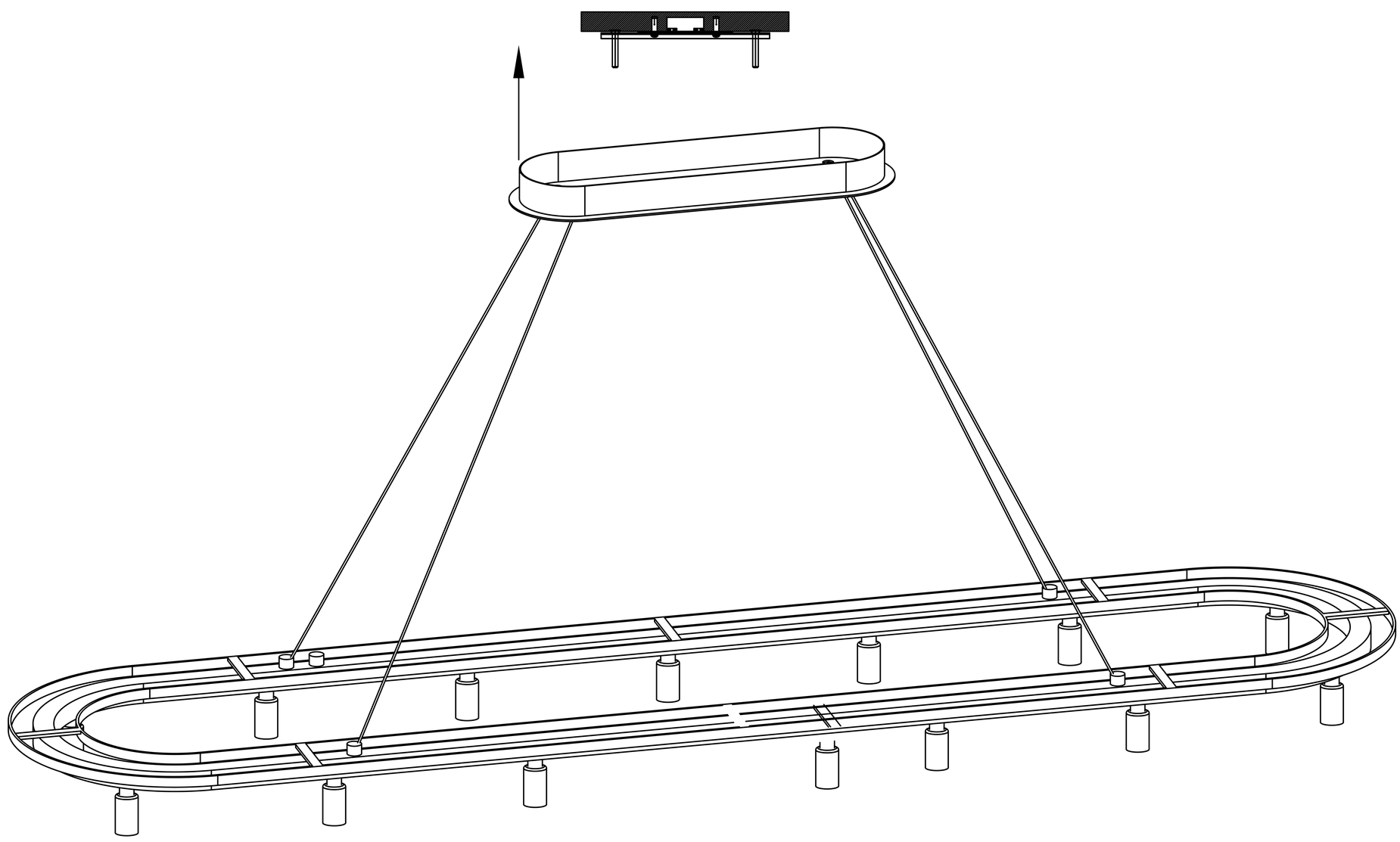

Please note:

please check the parts list, of the parts are missing during your actual installation, please contact us. We will help you in time!

Step 4

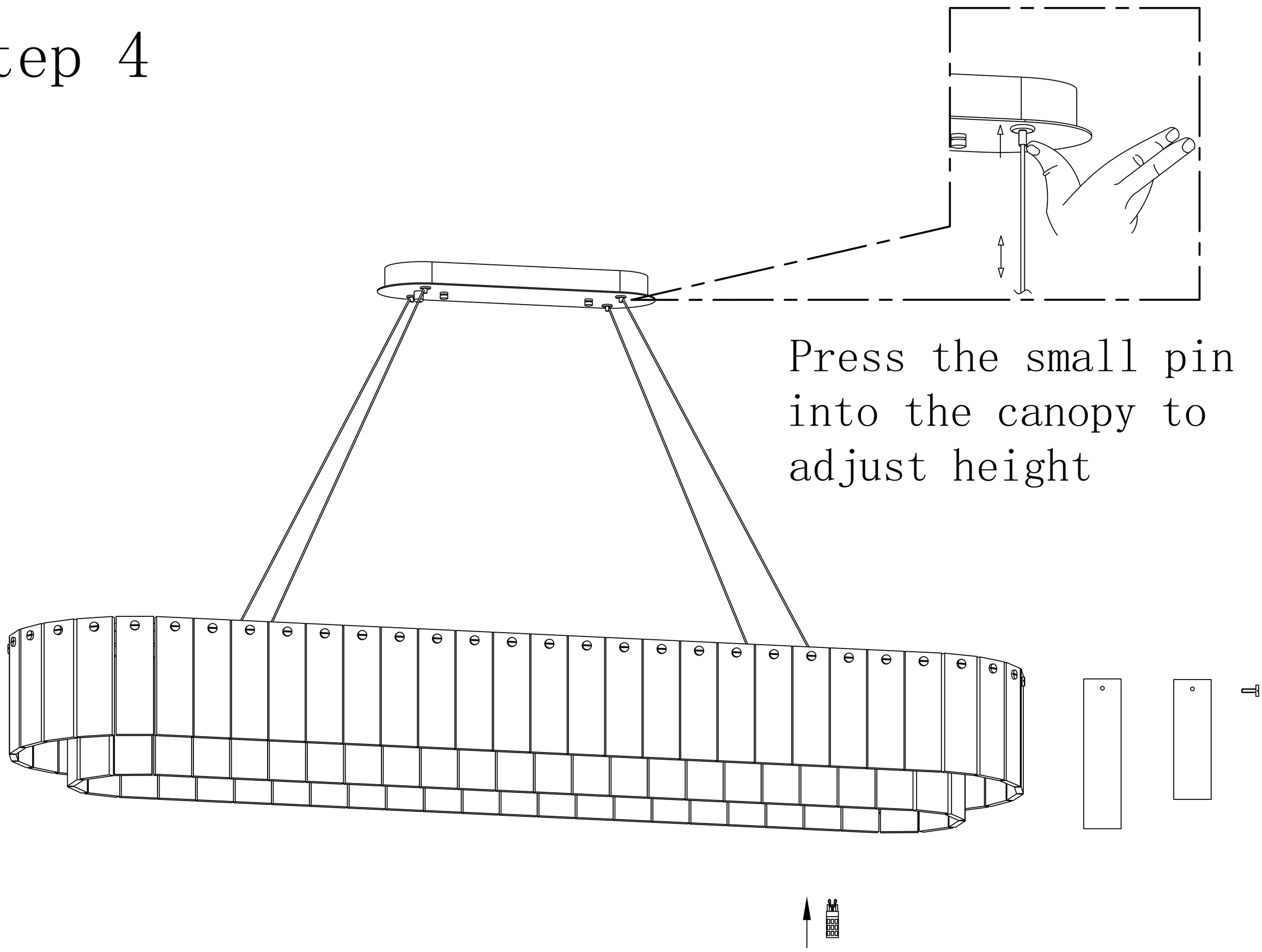

Maintenance:

To ensure safe and efîicient use of this product, please clean the lamp regularly (once a.mootb).Before cleaning, turn off the power and walt tor lhe lamp to cool (a room temperature. Then use a soft cloth dipped in water and wrung dry to wipe it clean.

Warranty

Our dedicated customer service team is available 24 hours a day to assist you.If you have any questions or concerns, we guarantee a response within 24 hours. During the warranty period, if you encounter any problems or need assistance, please don't hesitate to reach out to us via email. To ensure a swift and accurate resolution, kindly provide your order ID and detailed information regarding the issue.

Important Note: Please use this light fixture only for its intended purpose and avoid retrofitting or remodeling it.
The warranty does not cover failures caused by third-party products or natural disasters.