AP - TT03SR 1 PCS

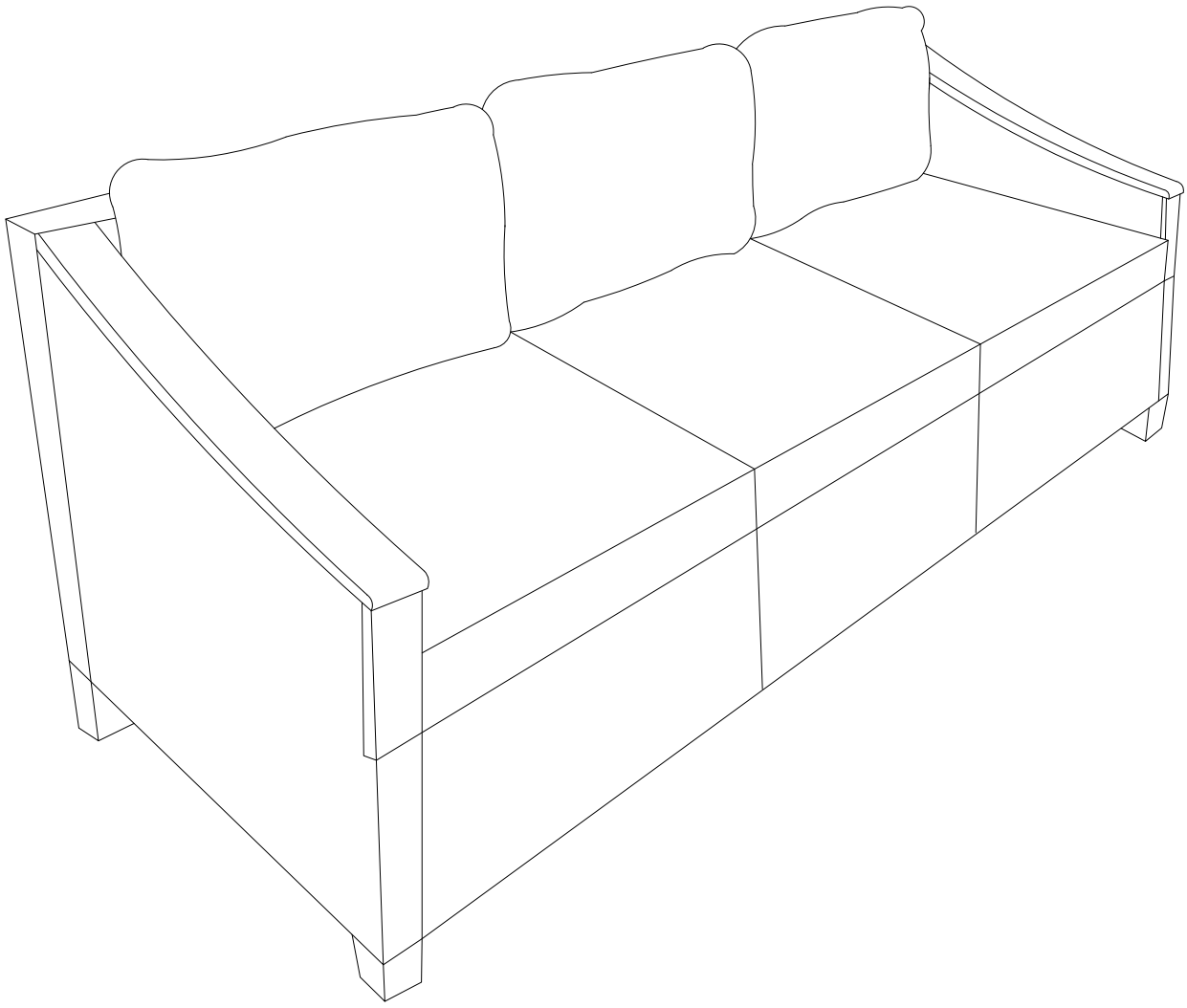

ASSEMBLY INSTRUCTIONS

Care & Maintenance

Caution: You must read this before you proceed

- ⊘  Not for commercial use. For residential use only.
- ⊘  Prolonged exposure to rain may cause rusting which can stain floors.
- ⊘  Do not put hot items directly on furniture surface.
- ⊘  Do not clean furniture with harsh cleansers or polish.
- ✓  To obtain the longest lifespan of your outdoor products, minimizing exposure to direct sunlight is recommended.
- ⊘  Children should not climb or jump on the furniture.
- ⊘  Do not write on furniture without a padded barrier to protect the surface.
- ✓  To obtain the longest lifespan of your outdoor products, avoid extended and lengthy exposure to rain, snow, and direct sunshine.
  Whenever possible cover the product and /or place under patio or awnings.
- ⊘  Do not place the product in stone areas or areas that absorb too much sunlight.
- ⊘  Stains may be removed with mild soap solution and damp cloth.
- ✓  Keep away from sources of ignition.
- ✓  High-pressure water guns must not be used for cleaning. Dust and pick-up spills using a clean, non-colored, lint-free cloth.

 Tip: We recommend flattening the boxes to use as a protective work surface, or setting up your new furniture on a soft floor like a carpet.

How to Put on the Cushion Cover

1

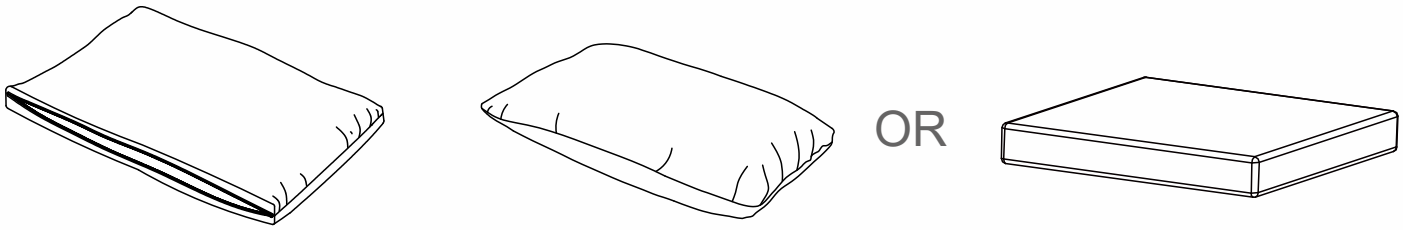

1.Take the cushion covers and inners out of the carton.

2

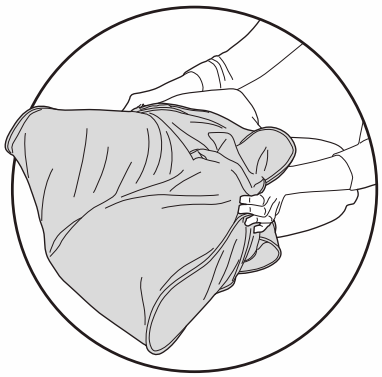

2.Fold the inner in half, pushing the sides together,then begin to slide the cover onto it.

3

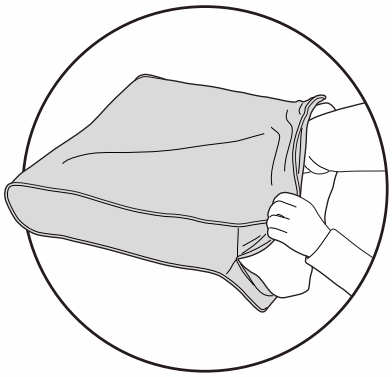

3.Align both far corners, then gently compress insert while fitting cover around it.

4



4.To avoid a stuck zipper, please pull the fabric away from the zipper before moving forward.

5

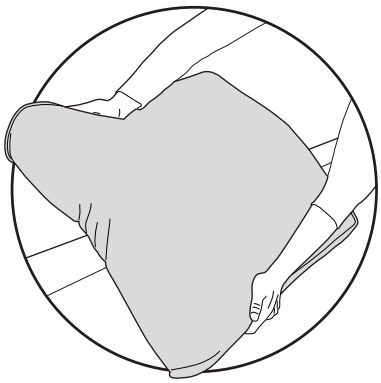

5.When all done, please pat the cushion or give it a little shake to make it more flat.

Care & Cleaning Guidelines

The covers are machine washable.Before washing, please zip the cover up to avoid catching other clothes.
You can clean the dust on the chair / table / footstool with a damp cloth.

NOTE:

Vacuum compressed cushions,
Will return to normal shape after 5-7 days use.

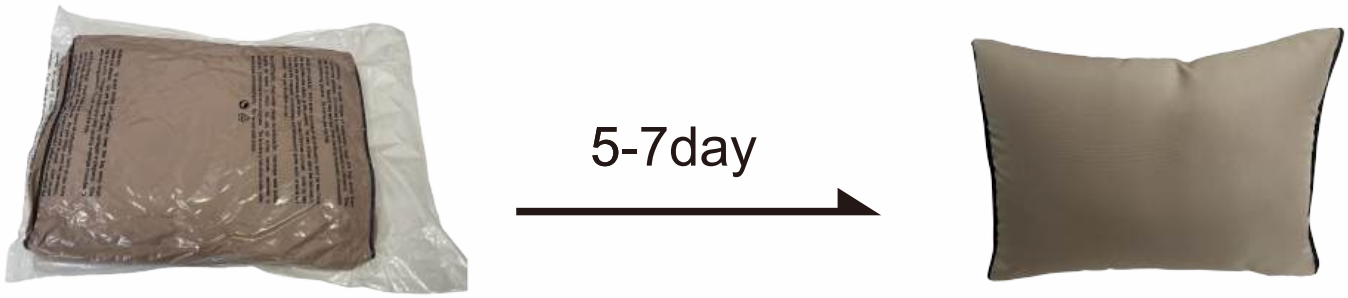

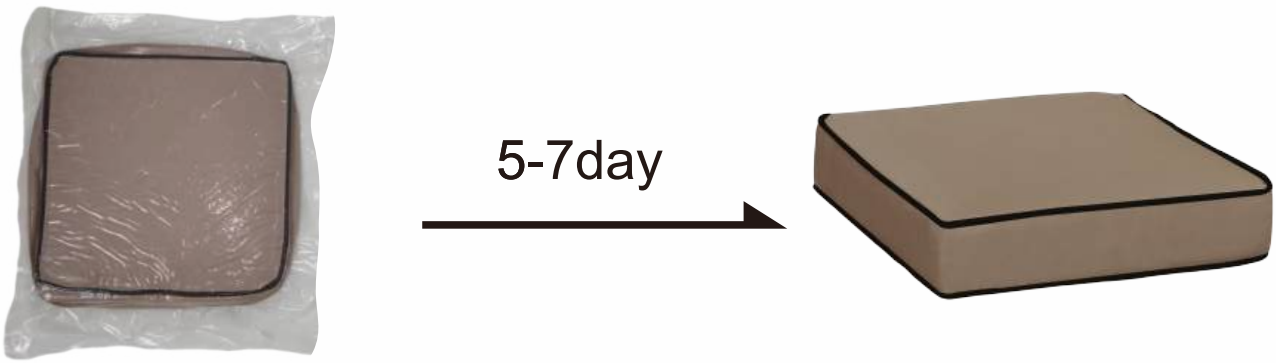

BENCH 3

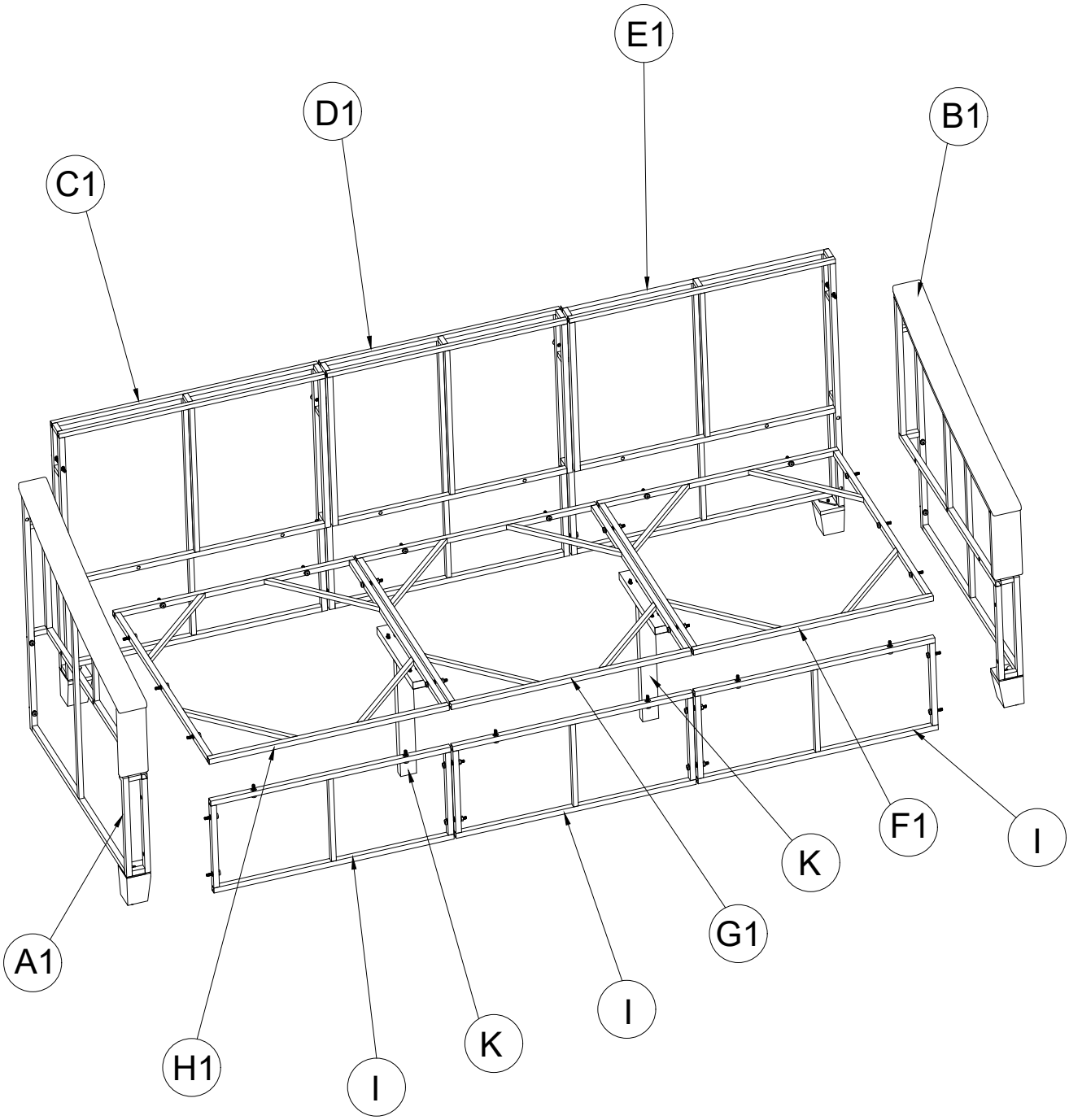

ASSEMBLY INSTRUCTION

PARTS

A1 x 1

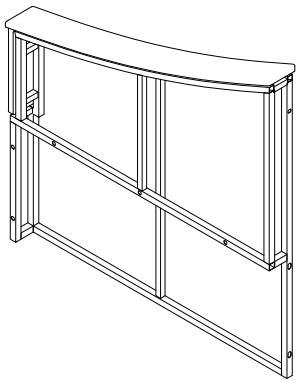

Right Armrest

B1 x 1

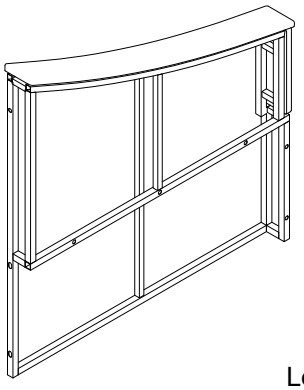

Left Armrest

C1 x 1

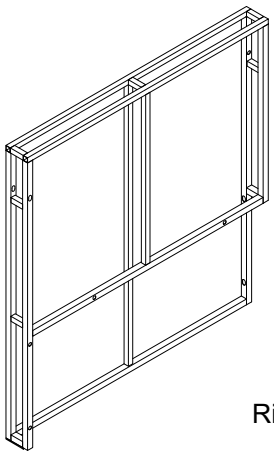

Right Seat Back

D1 x 1

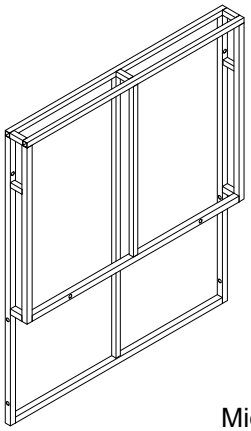

Middle Seat Back

E1 x 1

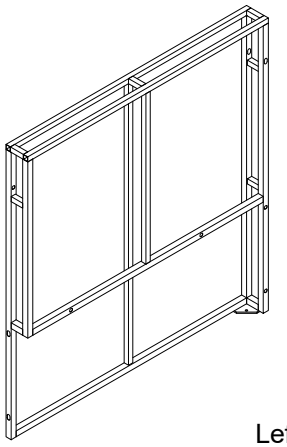

Left Seat Back

F1 x 1

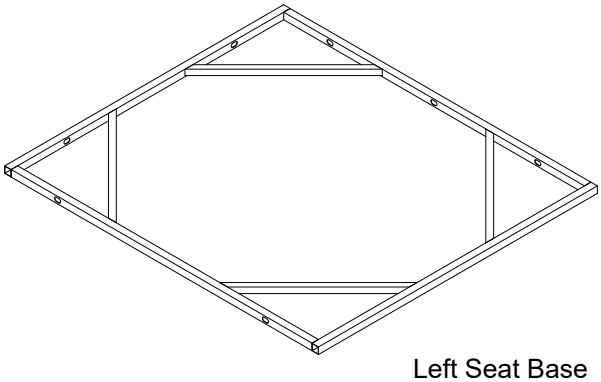

Left Seat Base

G1 x 1

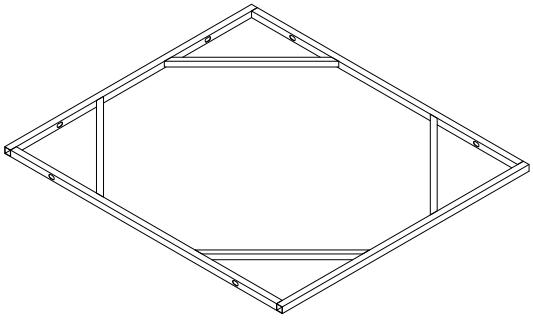

Middle Seat Base

H1 x 1

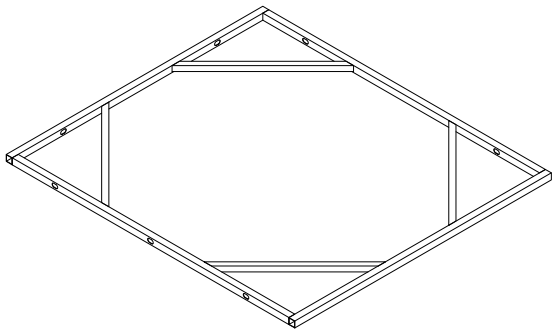

Right Seat Back

ASSEMBLY INSTRUCTION

I x 3

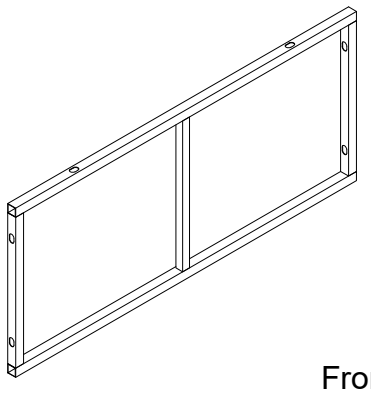

Front Panel

K x 2

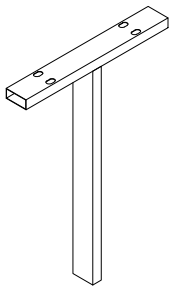

Center Support Leg

L x 3

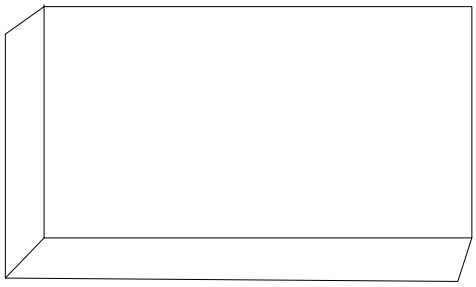

Foam Cushion core

M x 3

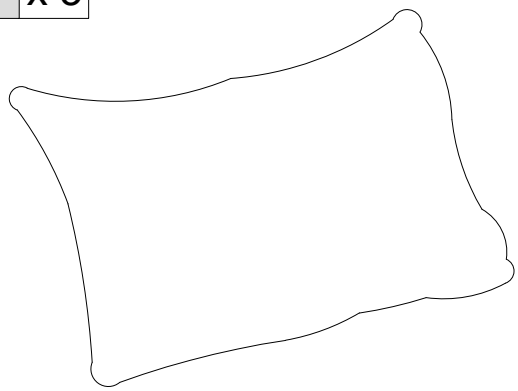

Back Cushion

N x 3

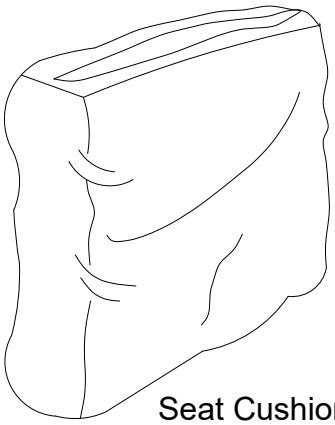

Seat Cushion Cover

1 x 60 M6x1 	2 x 04 M6x15 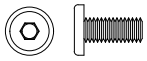
3 x 04 M6x15 	4 x 38 M6x30 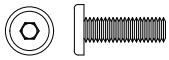
5 x01 4x60 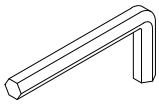	6 x 08 M6x45 
7 x 04 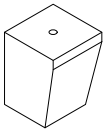	8 x 06 M6x75 
9 x 08 M6 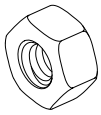	10 x02 40x14x3mm 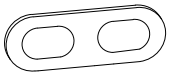
11 x01 Key 10 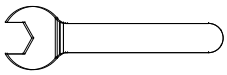	

01

Do not fully tighten all bolts until assembly is complete.

1 x08	M6
9 x04	
6 x04	M6x45

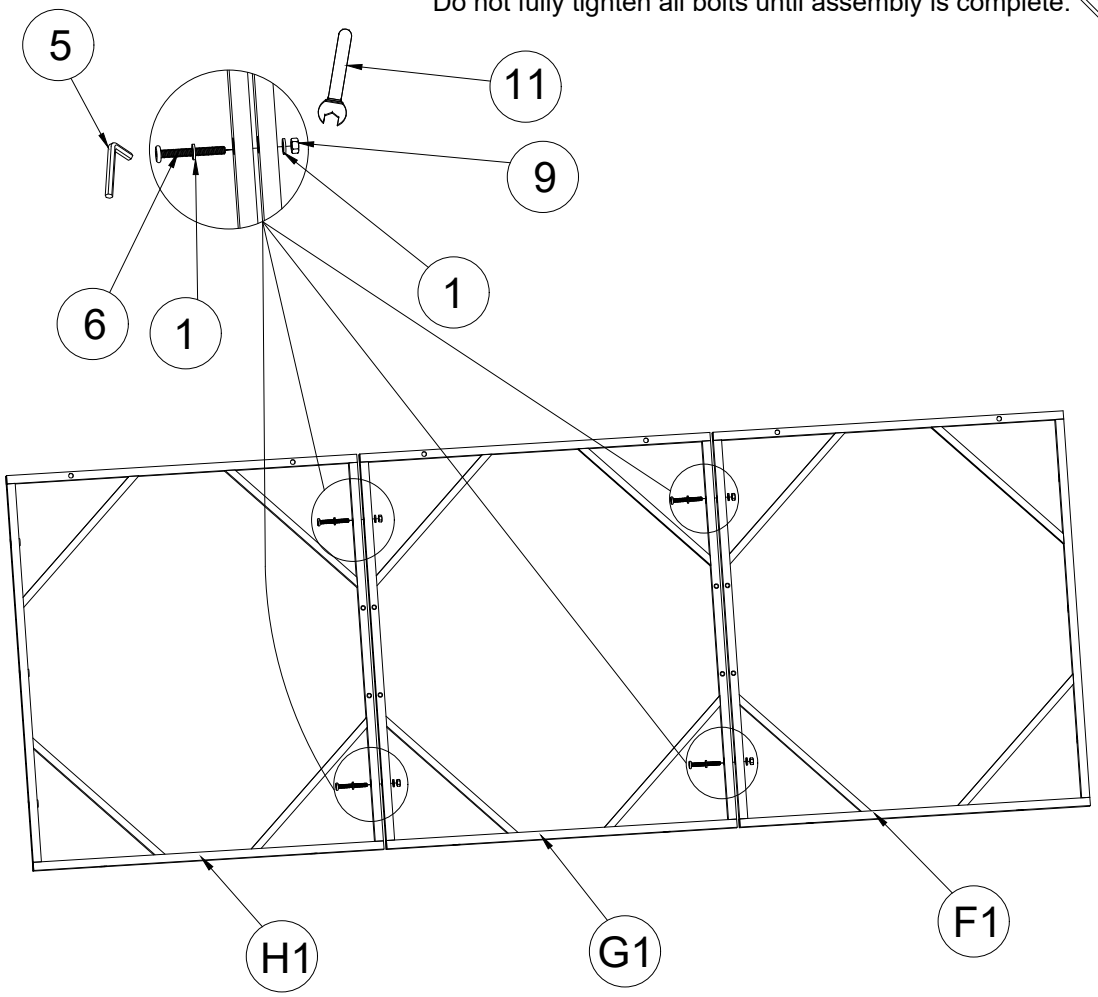

BENCH 3

02

Do not fully tighten all bolts until assembly is complete.

1 x08	M6
2 x04	M6x15
4 x04	M6x30
10 x02	40x14x3mm

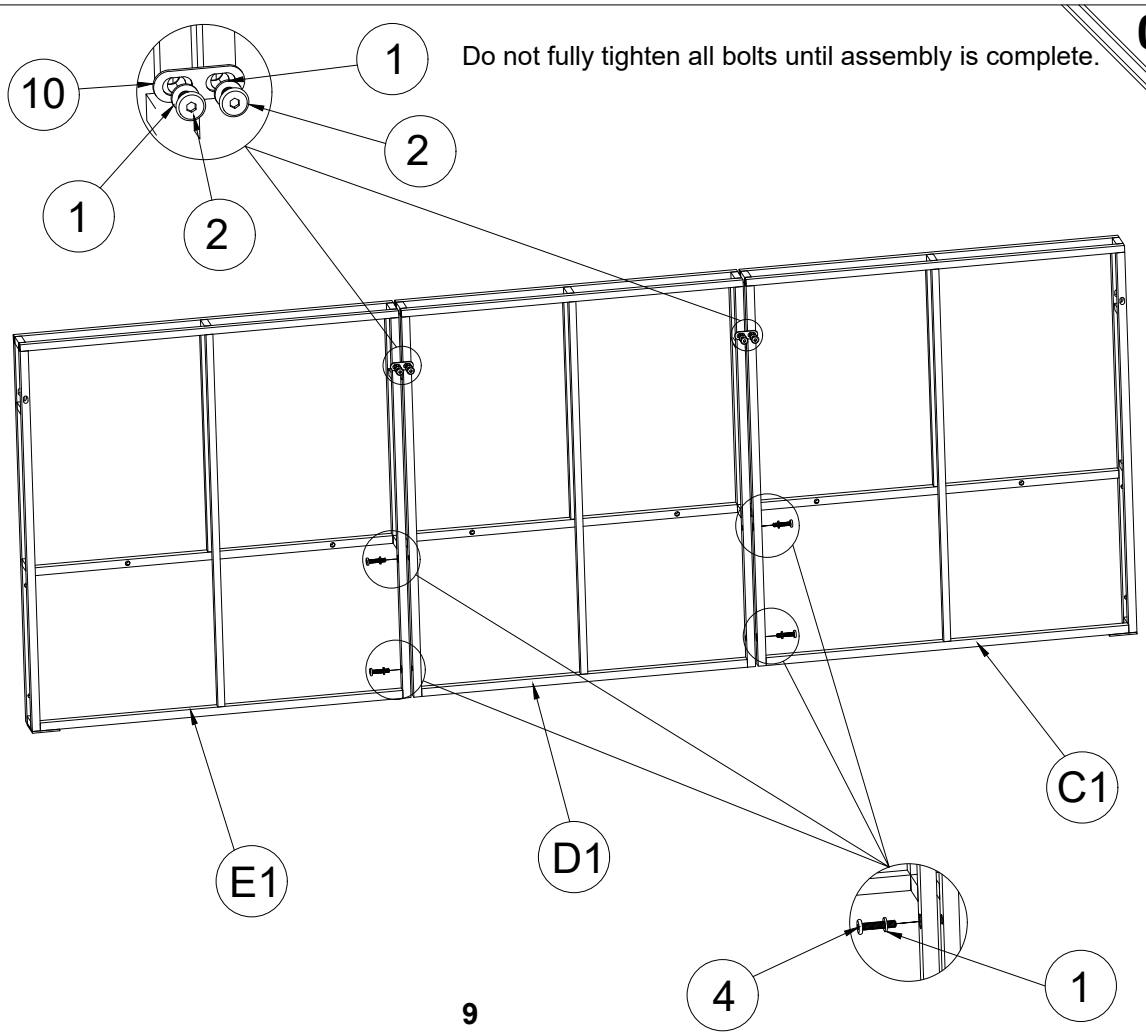

BENCH 3

1 x14	M6
4 x06	M6x30
6 x04	M6x45
9 x04	

Fully tighten bolts.

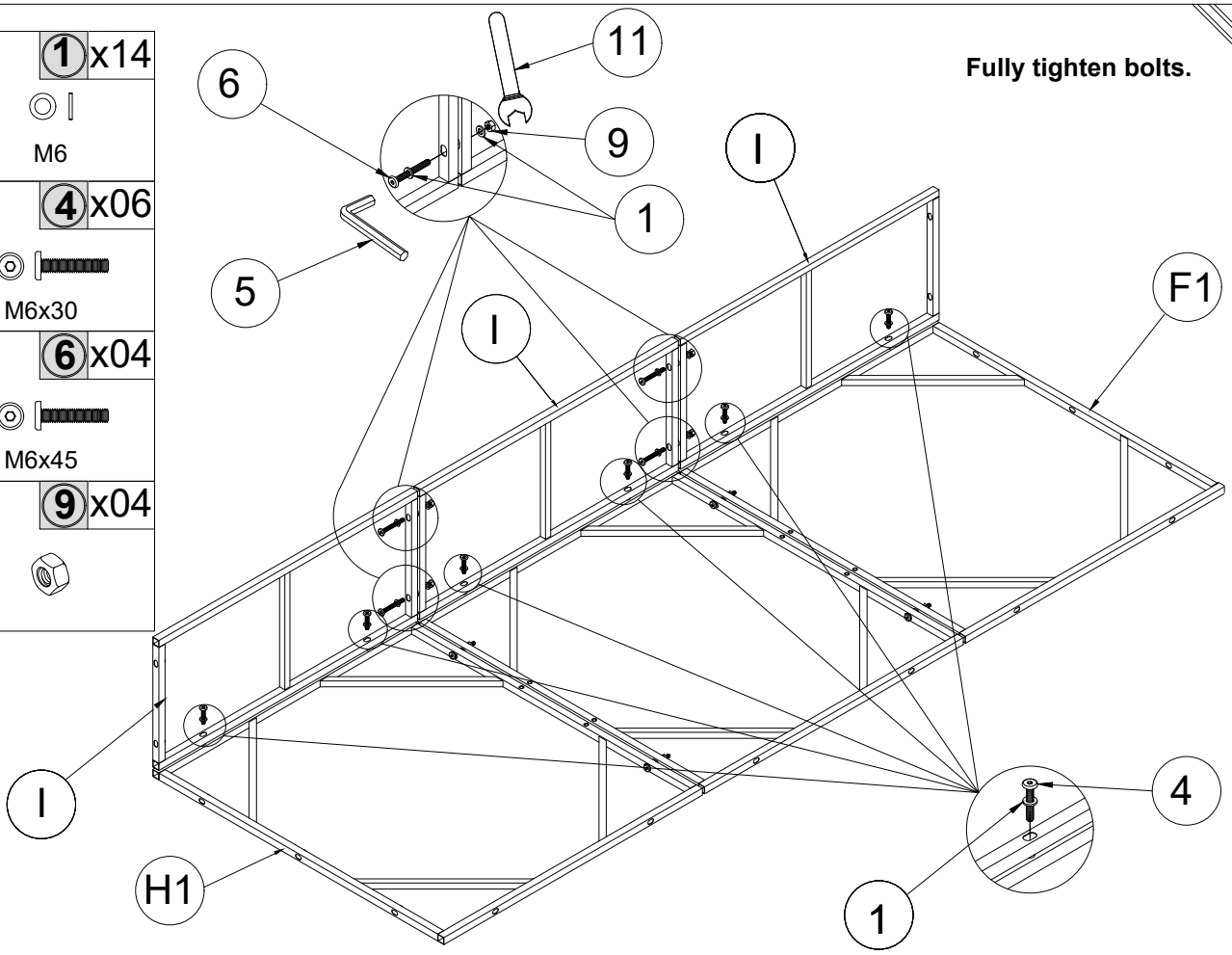

BENCH 3

1 x06	M6
4 x06	M6x30

Do not fully tighten all bolts until assembly is complete.

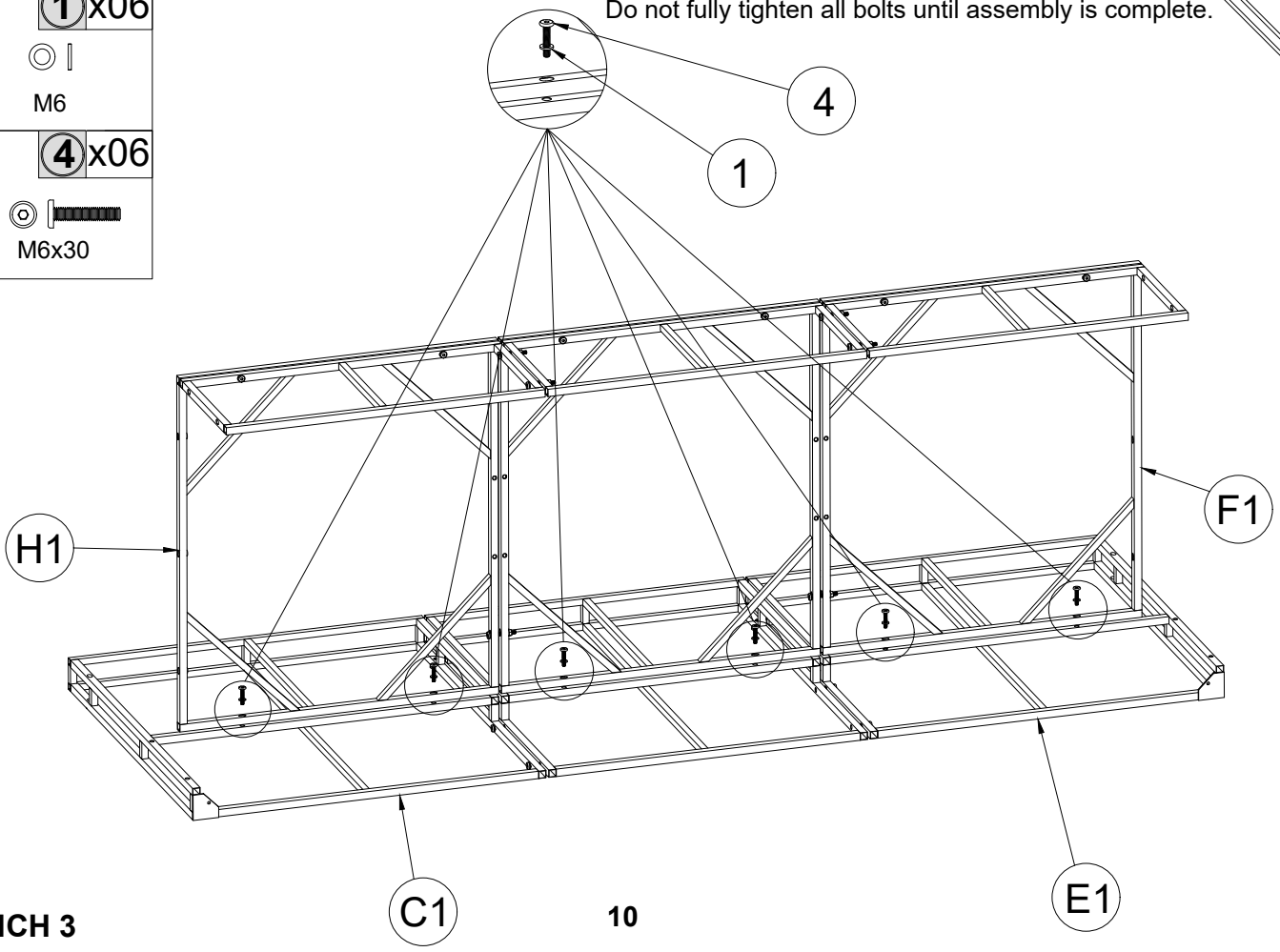

05

Fully tighten bolts.

1	x08
	M6
4	x08
	M6x30

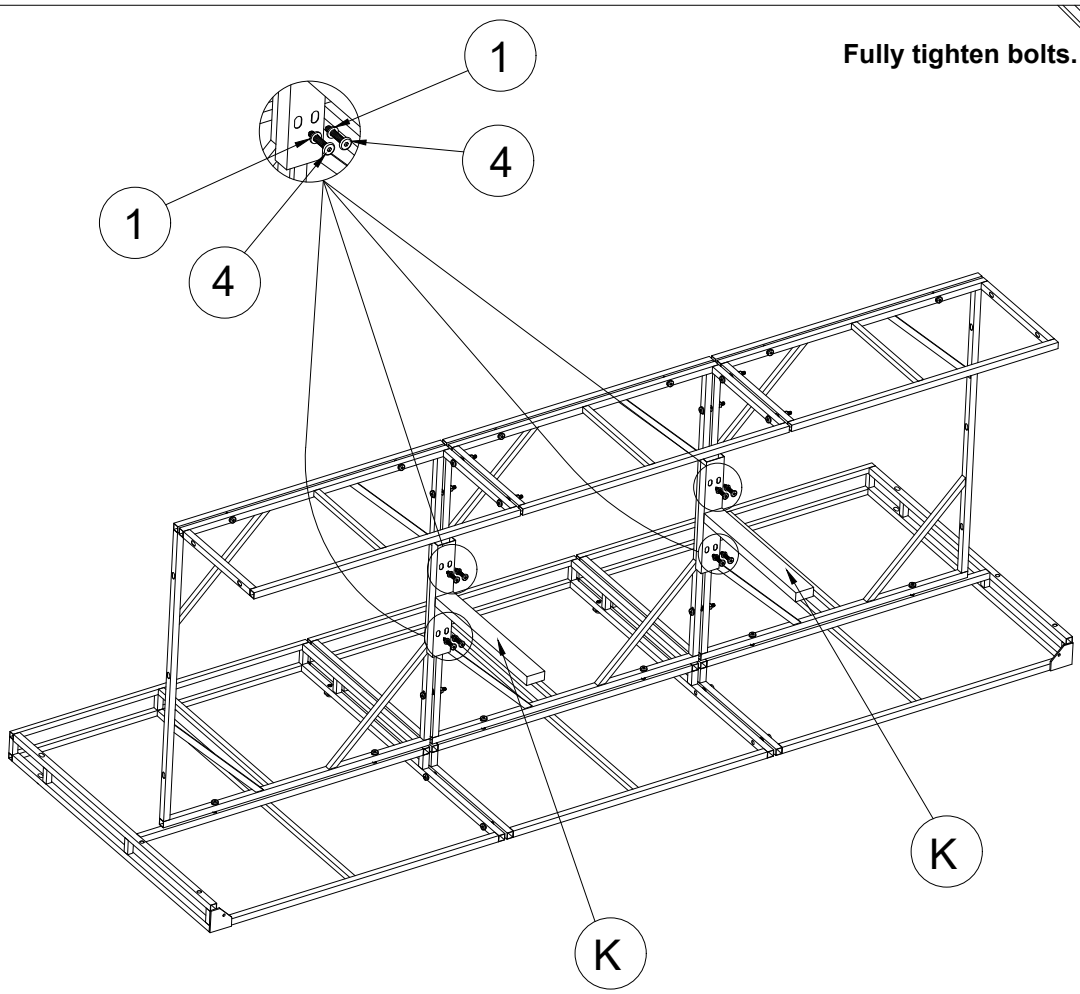

BENCH 3

06

Do not fully tighten all bolts until assembly is complete.

1	x08
	M6
4	x07
	M6x30
8	x01
	M6x75

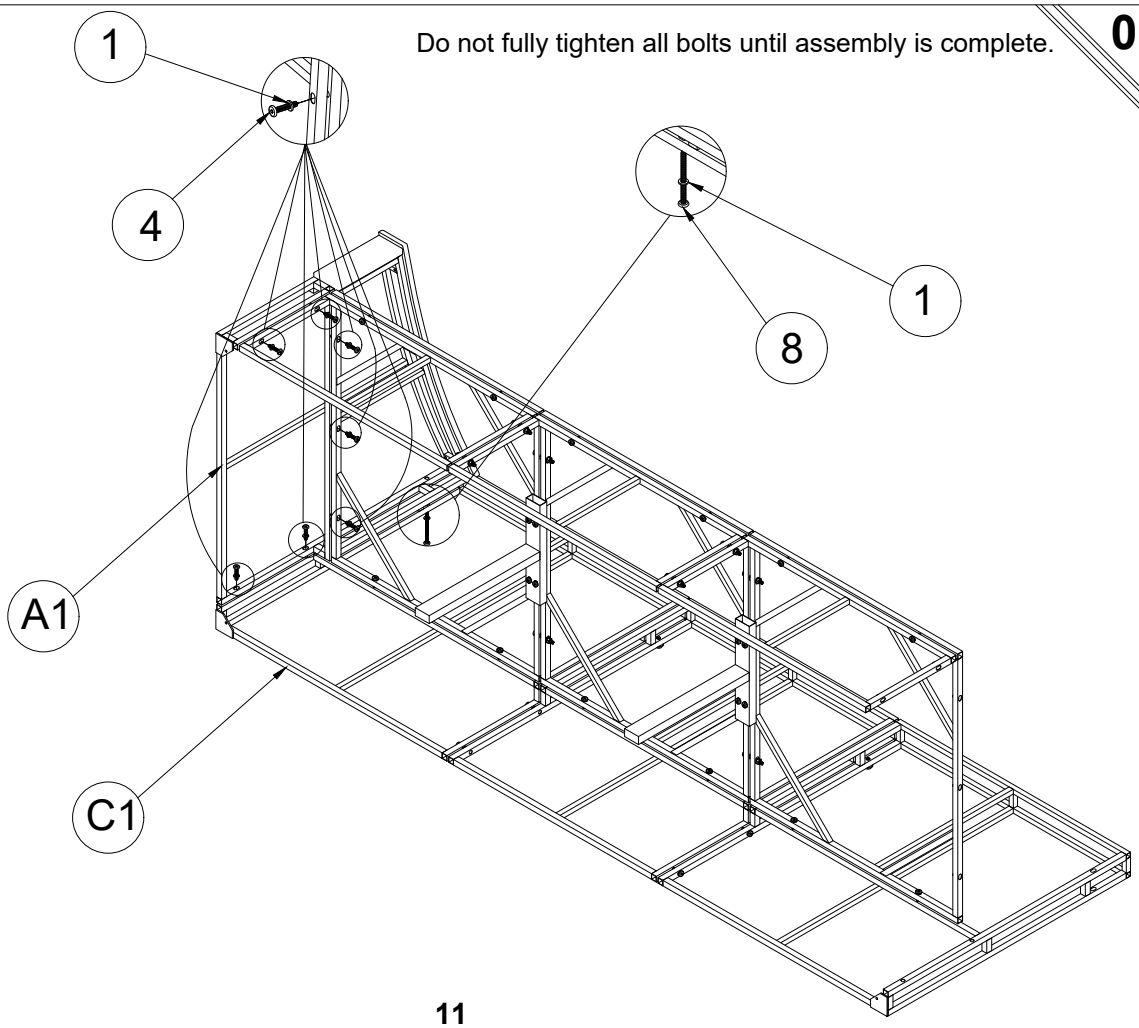

BENCH 3

1 x08	M6
4 x07	M6x30
8 x01	M6x75

Do not fully tighten all bolts until assembly is complete.

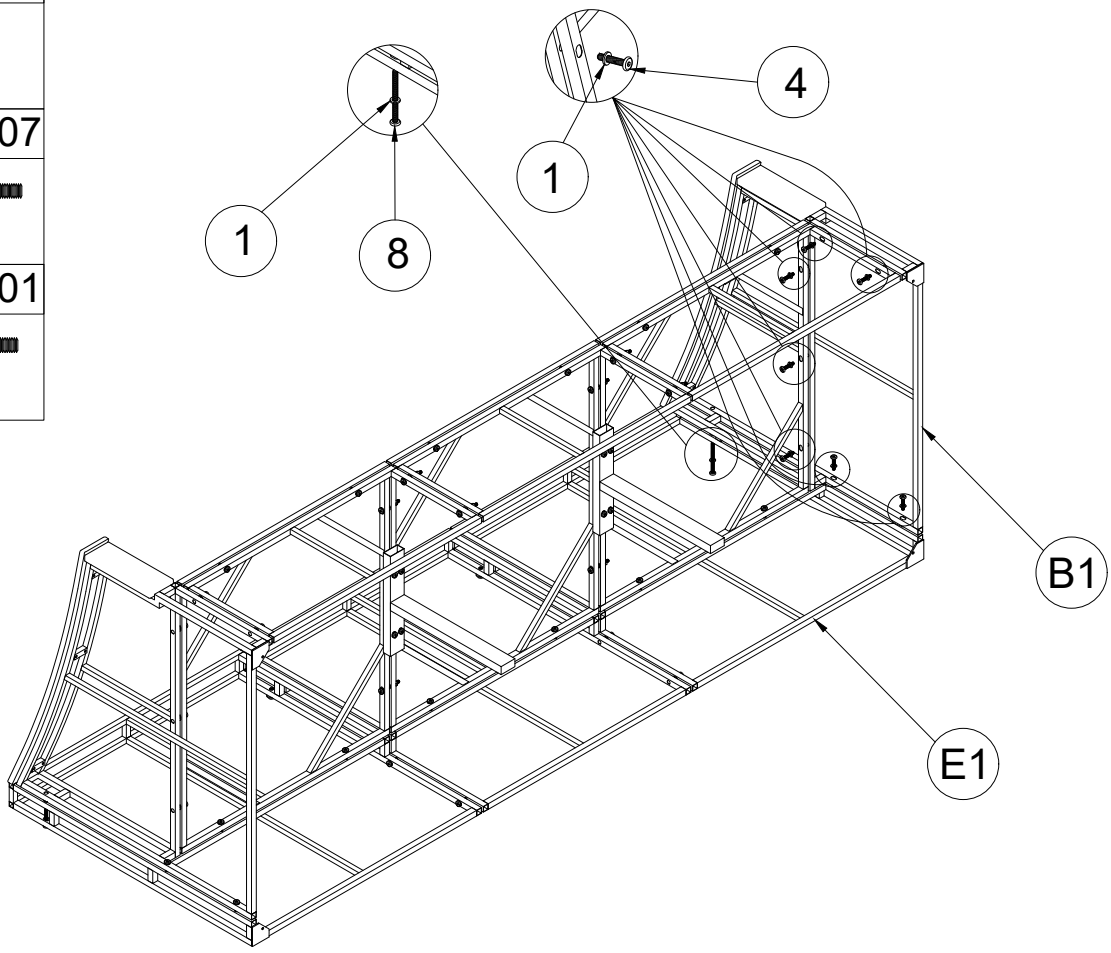

BENCH 3

7 x04	
8 x04	M6x75

Fully tighten bolts.

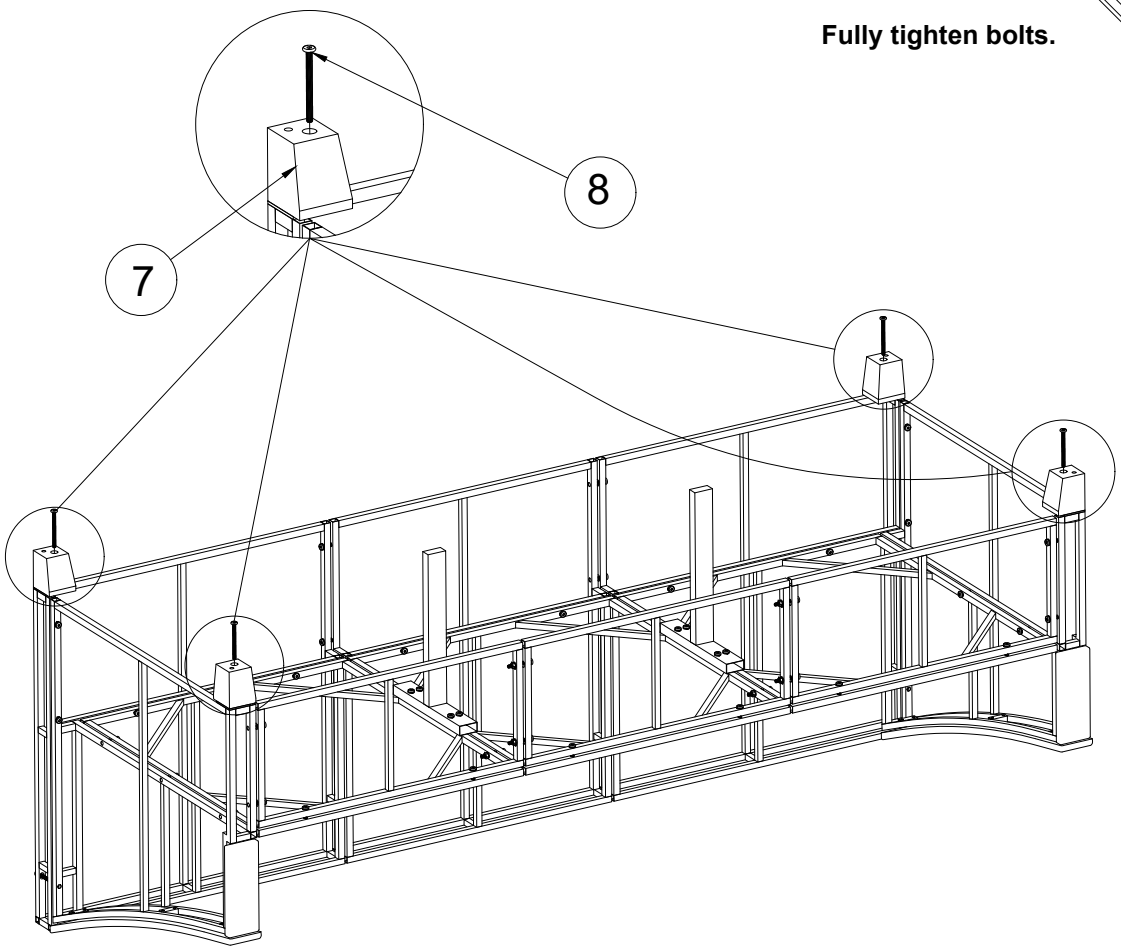

BENCH 3

3 x04

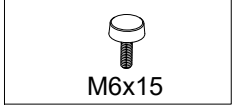

M6x15

Fully tighten bolts.

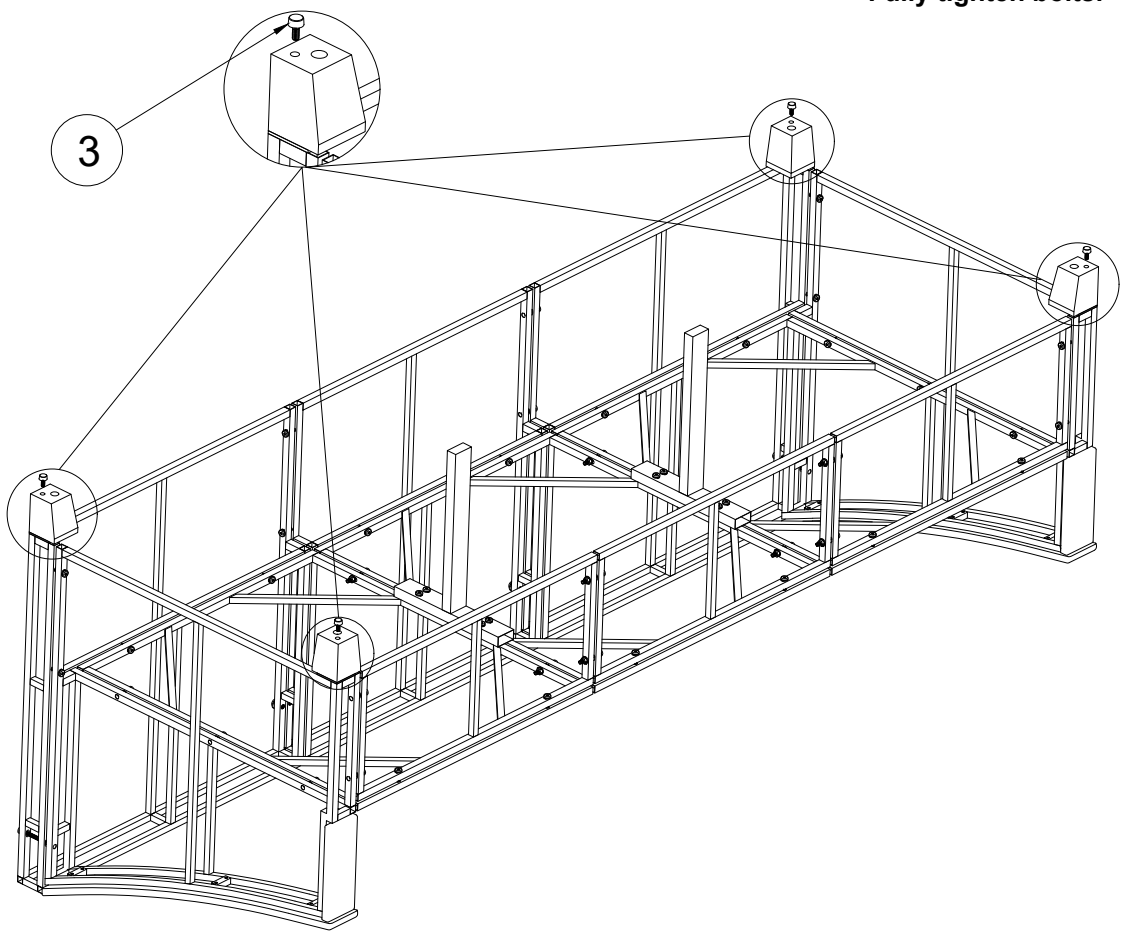

BENCH 3

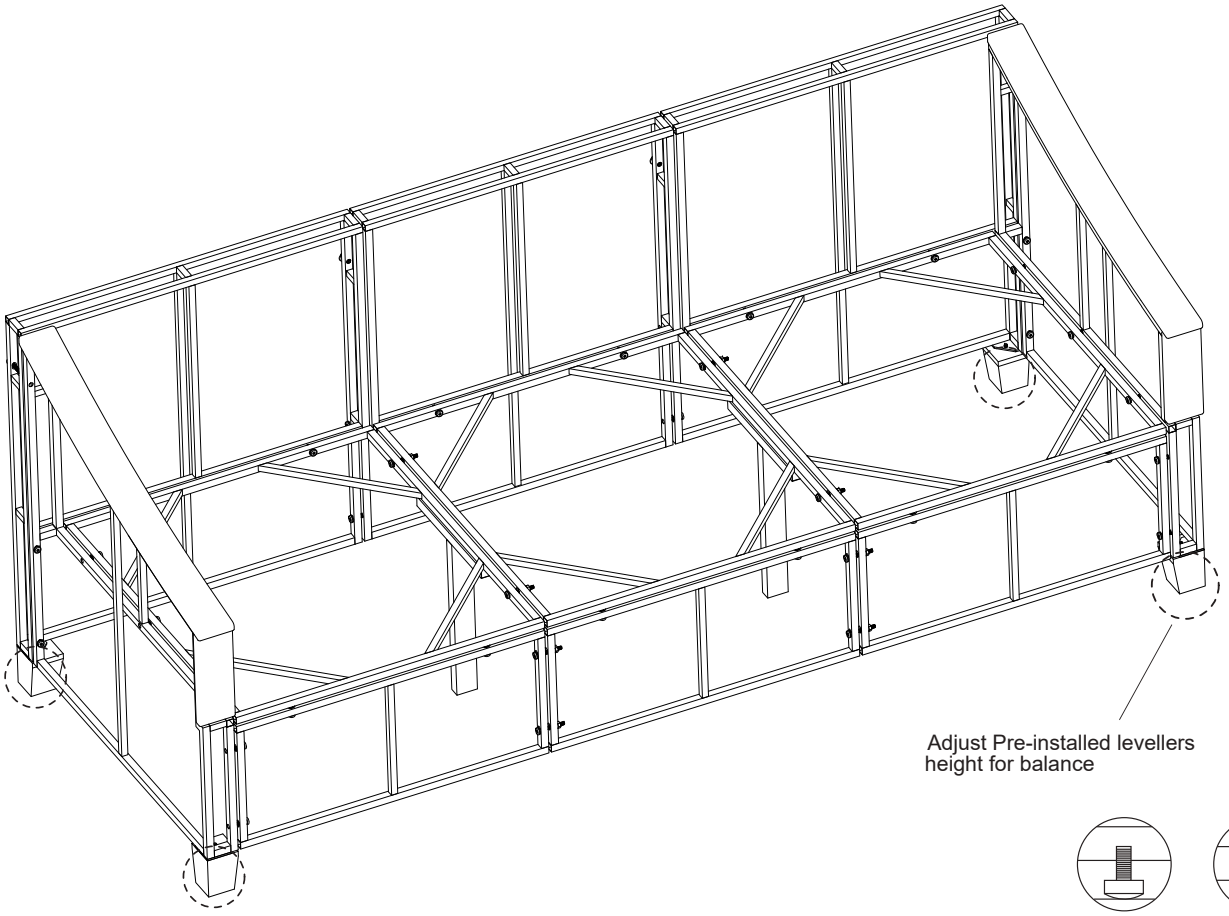

Adjust height for balance

Adjust low for balance

BENCH 3

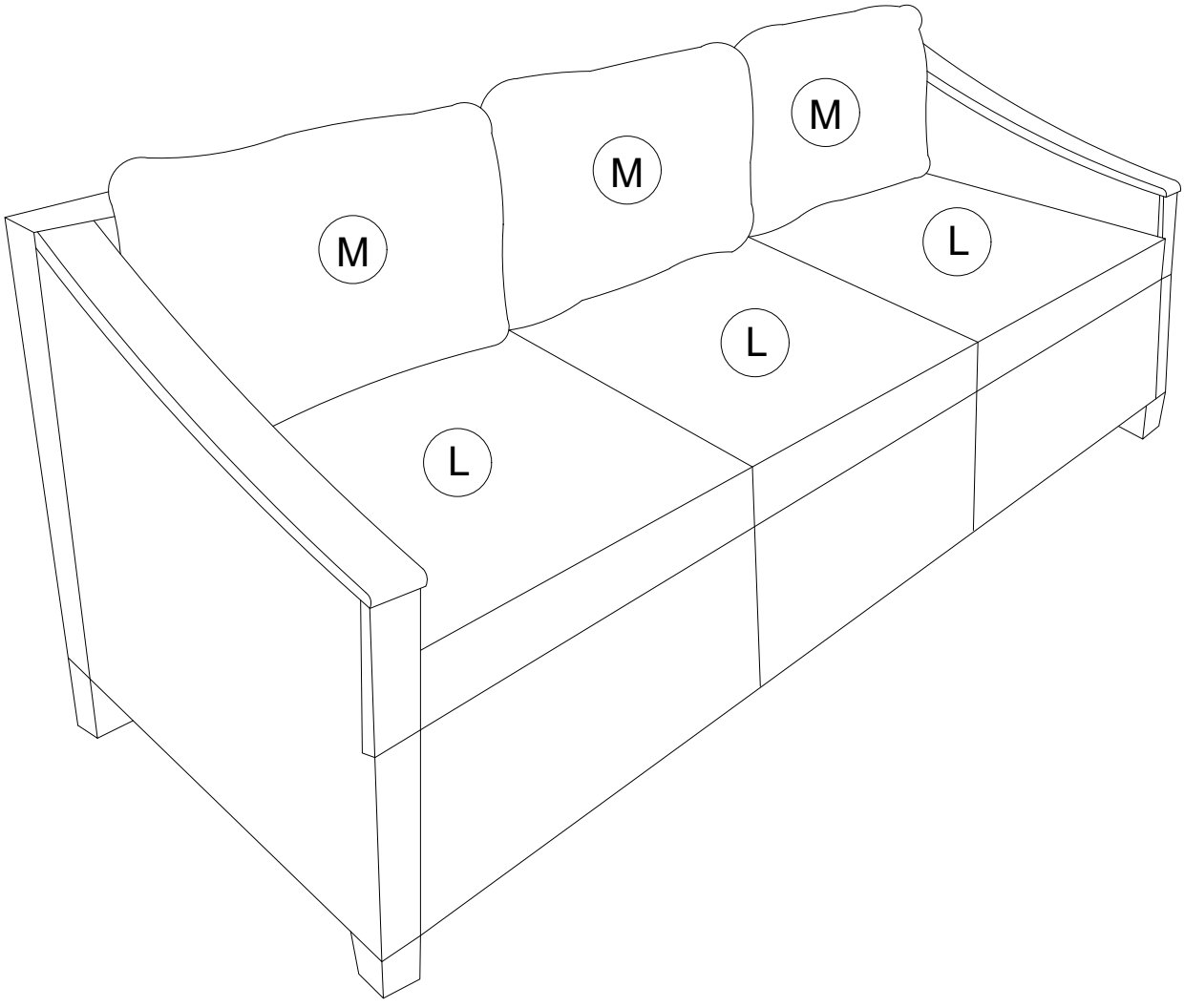
M
M
M
L
L
L