Assembly Instructions

Thank you for purchasing

Are you happy with your purchase?

Yes: That's great, we would love to hear more from you. Please leave us a review on our link here. Your feedback will be greatly appreciated.

No: If for any reason there is something missing, indifferent or incorrect with your order, please contact the retailer that you purchased your item from.

Please note that this items build time is around 30 minutes with 1 man build

ASSEMBLY INSTRUCTIONS
1 DRAWER BEDSIDE

IMPORTANT: READ THESE INSTRUCTIONS CAREFULLY BEFORE ASSEMBLING OR USING YOUR 1 DRAWER BEDSIDE.

PLEASE KEEP THESE INSTRUCTIONS FOR FUTURE REFERENCE.

HEALTH & SAFETY:

DO NOT use this item if any parts are missing, damaged or worn.
DO NOT use this item unless all fixings are secured.
Please keep small parts out of reach of children.
Always use on a level, even surface.

CARE & MAINTENANCE:

Assemble in the room of use.
Assembly should be carried out with this item laying flat, not standing upright.
Assemble on a soft,clean surface to prevent damages.
To remove the printed numbers on the pieces,use the eraser provided.
Periodically check all screws & fixings to ensure they are secure.
DO NOT push the item as this will damage the base.
Always lift the item with two pepple to reposition.
Keep any sharp objects away from the item.

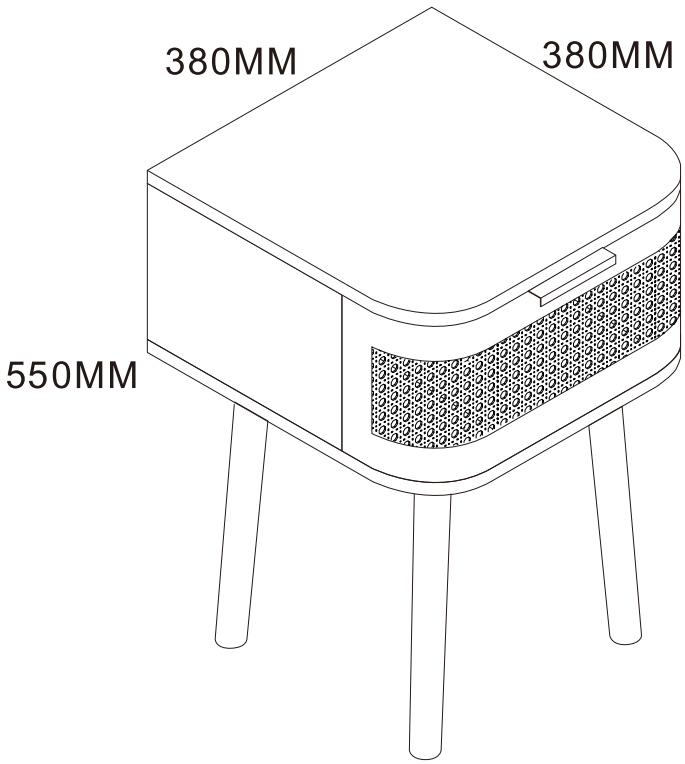

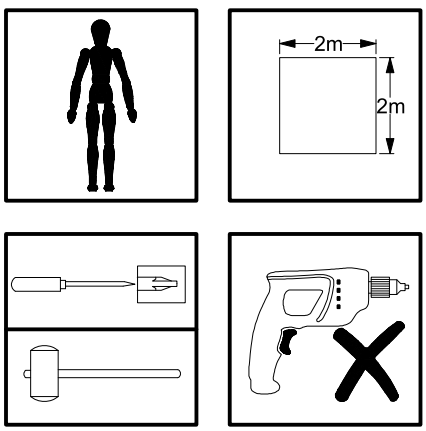

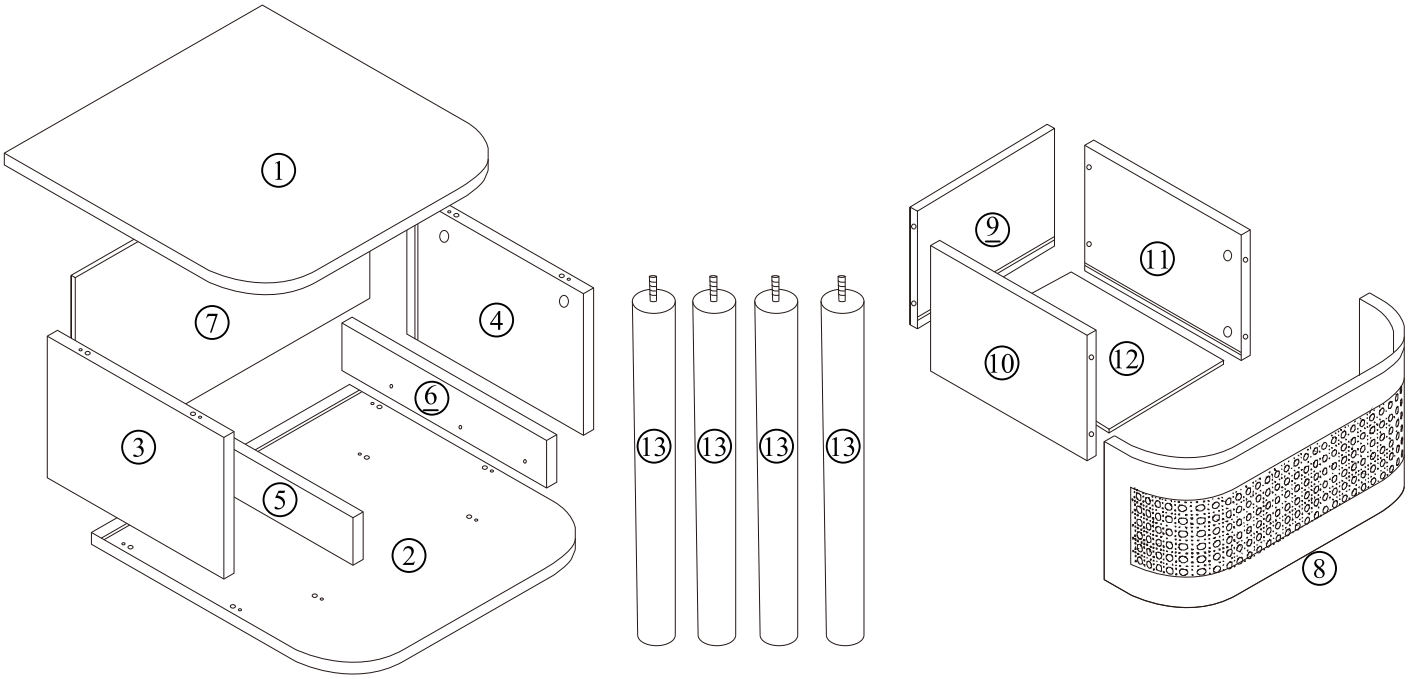

Parts list			
Part	Descripion	Box	Qty
1	Cabinet Top	1	1
2	Bottom Panel	1	1
3	Left Side Panel	1	1
4	Right Side Panel	1	1
5	Left Slide Support Panel	1	1
6	Right Slide Support Panel	1	1
7	Back Panel	1	1
8	Drawer Front Panel	1	1
9	Drawer Back Panel	1	1
10	Drawer Left Side Panel	1	1
11	Drawer Right Side Panel	1	1
12	Drawer Bottom Panel	1	1
13	Feet	4	4

Parts list		
Part	Descripion	Qty
A	Cam Bolt M6X35MM	8
B	Cam Lock 15X10MM	8
C	Wooden Dowel M6X30MM	12
D	Screw M4X35MM	14
E	Screw M3X14MM	4
F	Screw M3.5X14MM	2
G	Plastic Corner Support	4
H	Handle	1
I	Slide Sets METAL RUNNER 12" (CR)	1
	Slide Sets METAL RUNNER 12" (CL)	
	Slide Sets METAL RUNNER 12" (DL)	
	Slide Sets METAL RUNNER 12" (DR)	
J	Nylon Anti Tip Strap	2
K	Wall Plug	2
L	Metal Leg Plate	4
M	Screw M4X12MM	22
N	Screw M3X12MM	12

**** You will need a small mallet and a screwdriver for assembly.**
**** Some screws and wooden dowel may remain.**

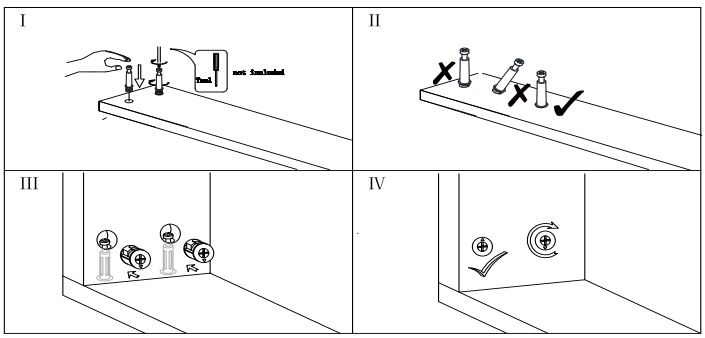

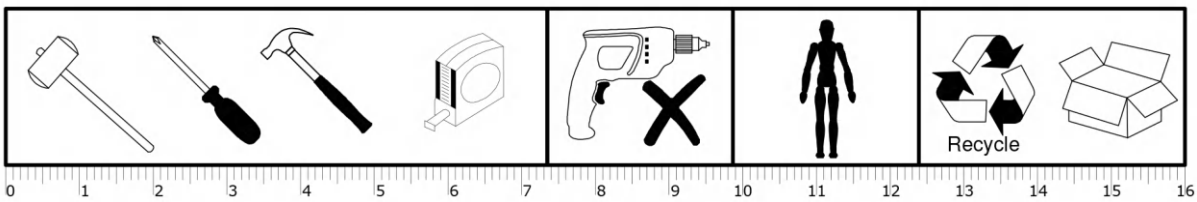

Step1

A X 4
C X 8

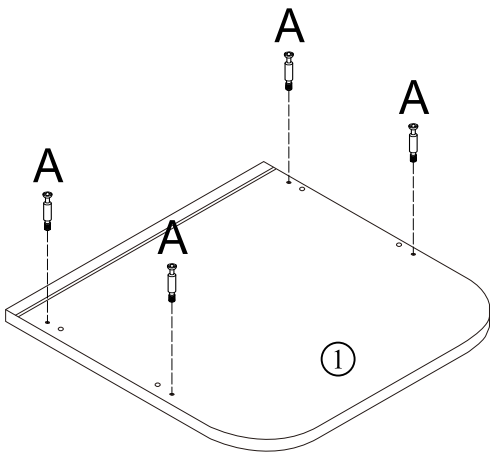

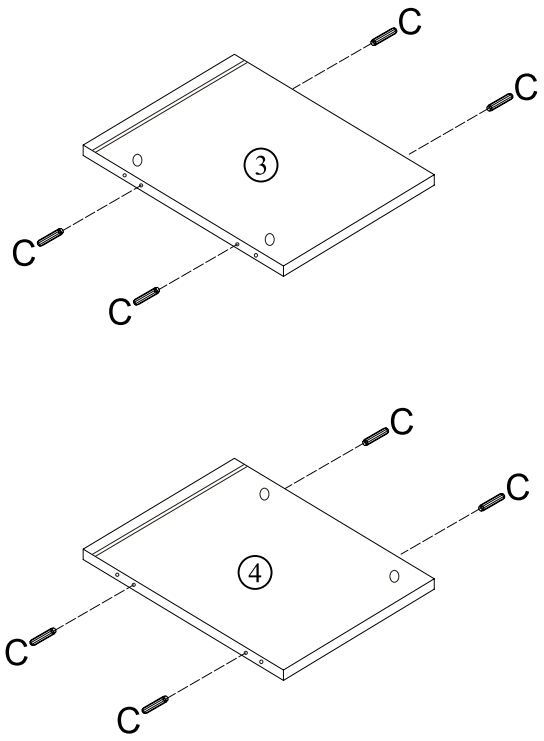

Step 2

B X 4

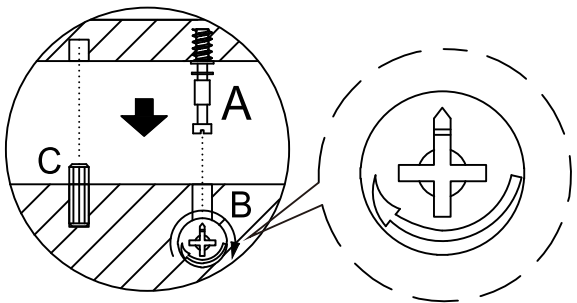

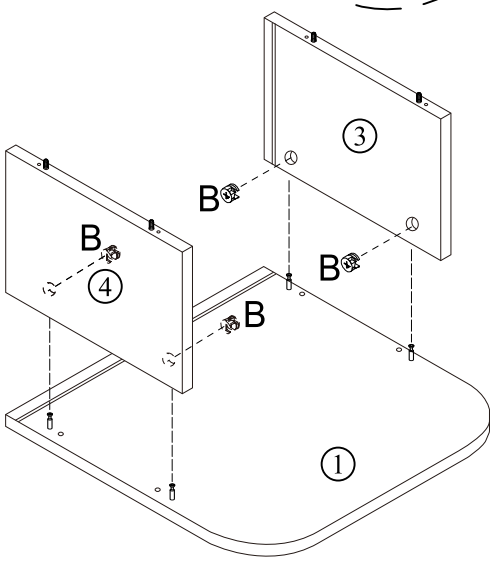

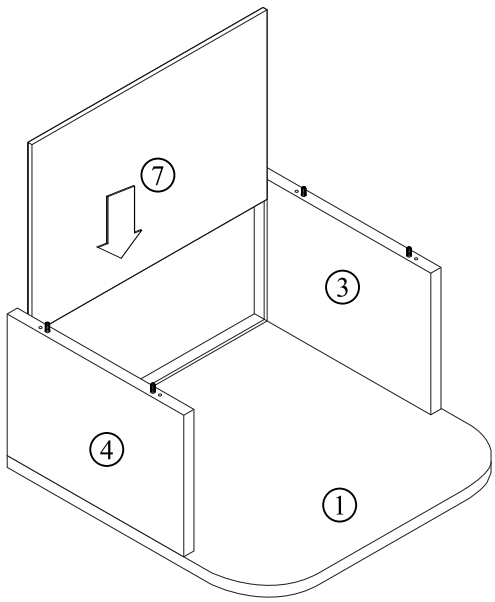

Step 3

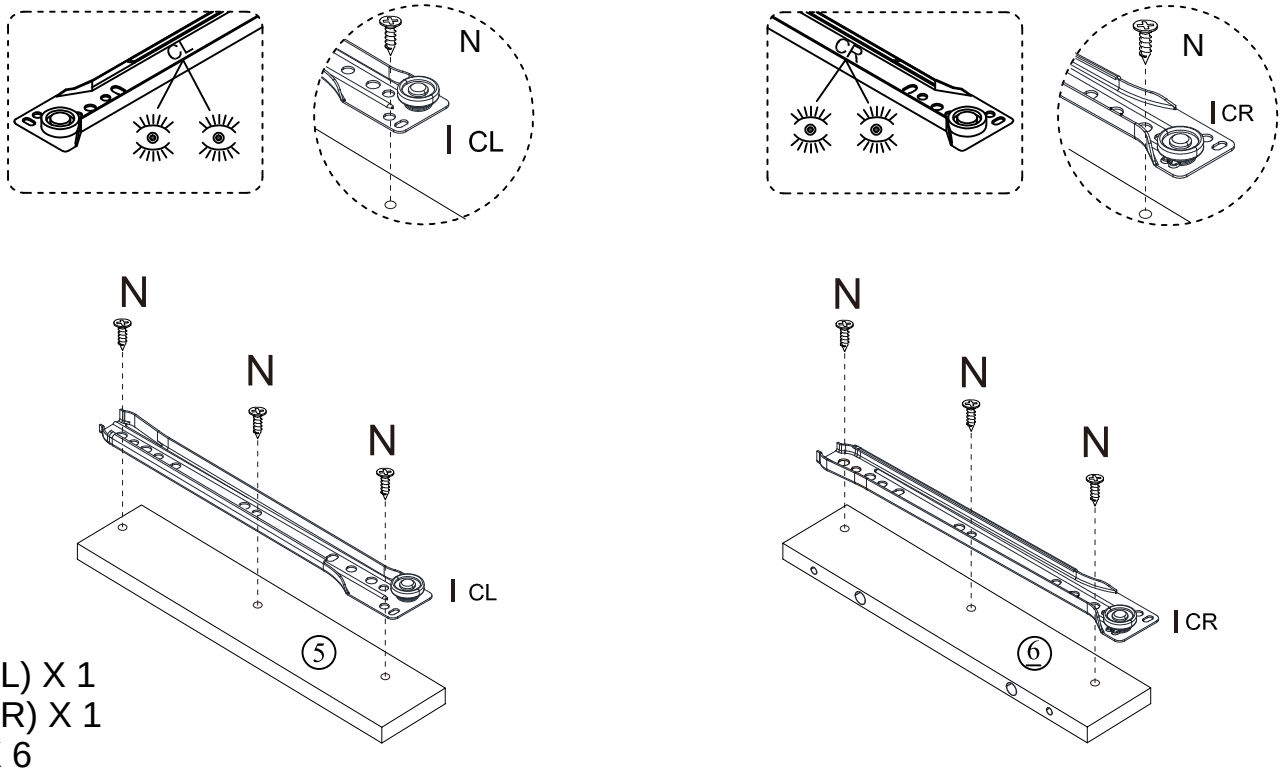

I (CL) X 1
I (CR) X 1
N X 6

Step 4

C X 4
D X 8

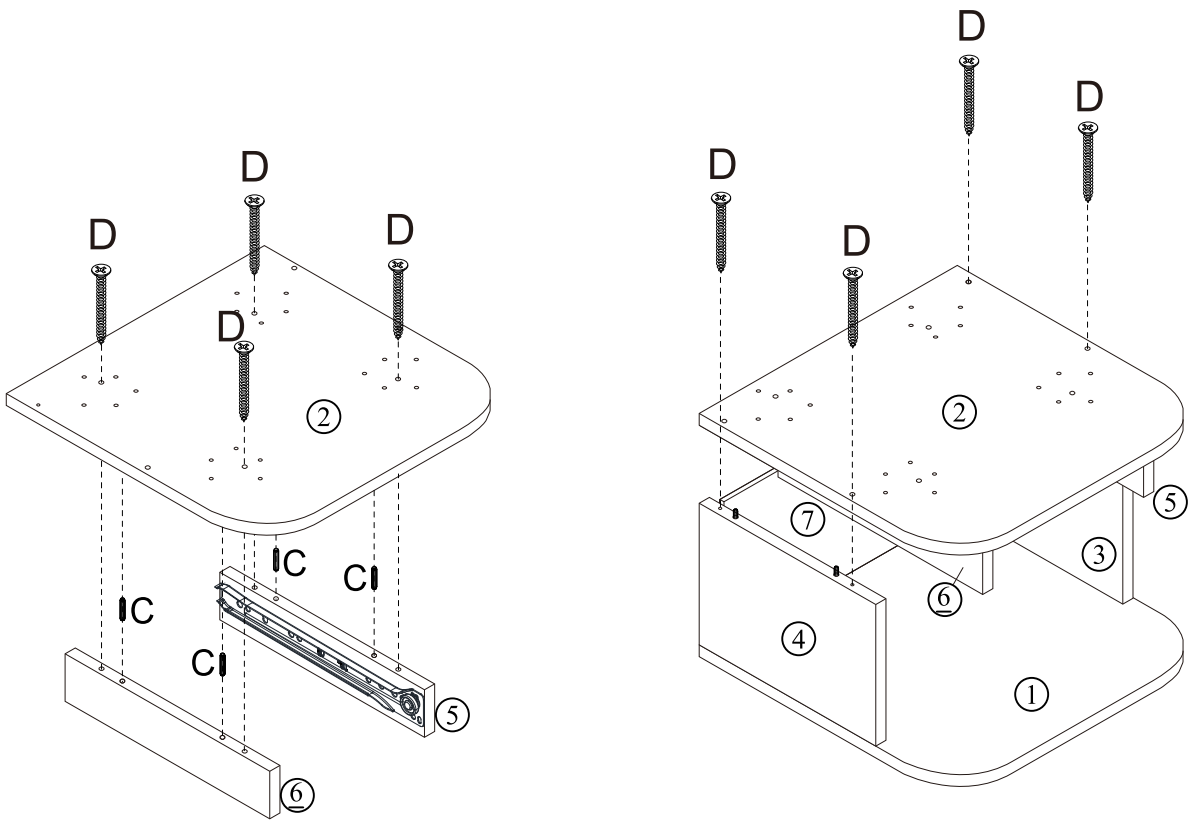

Step 5

L X 4
M X 20

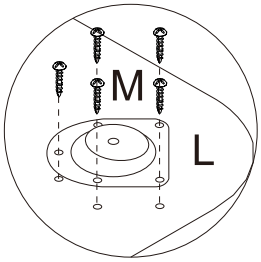

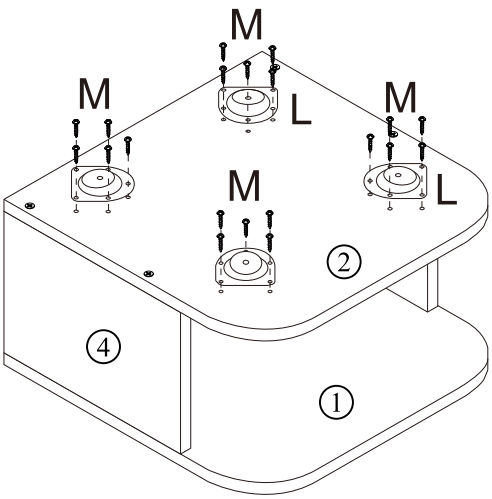

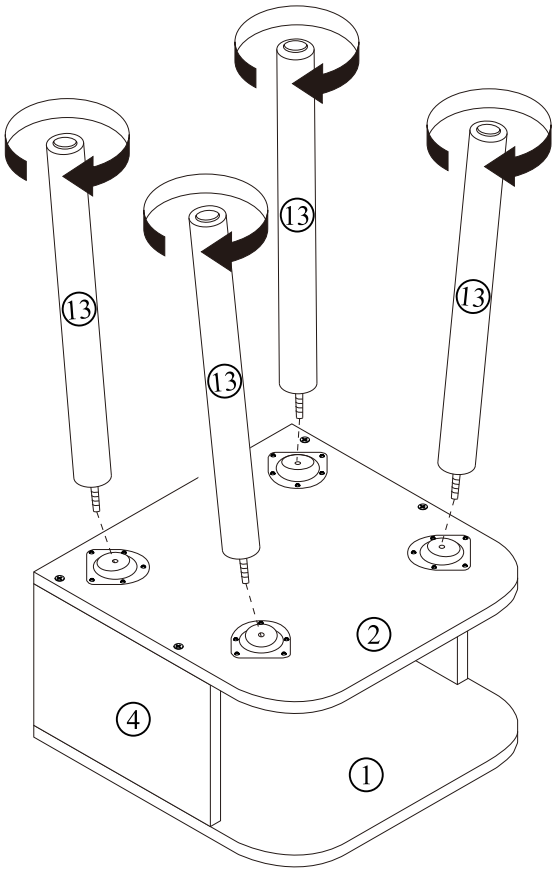

Step 6

A X 4
D X 4

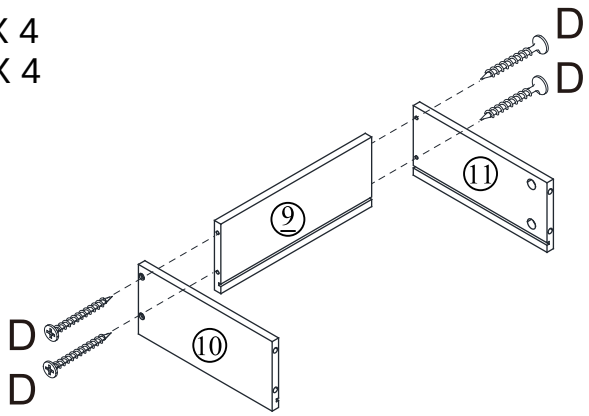

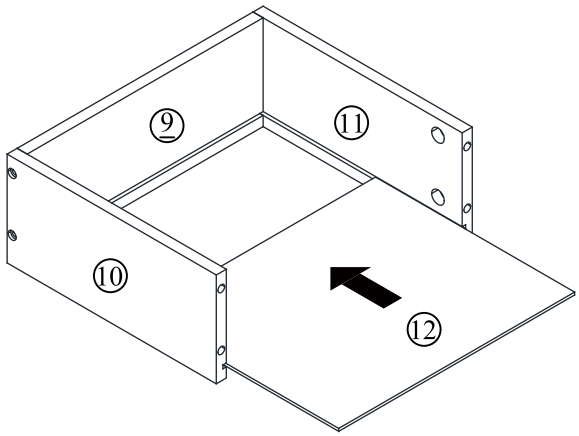

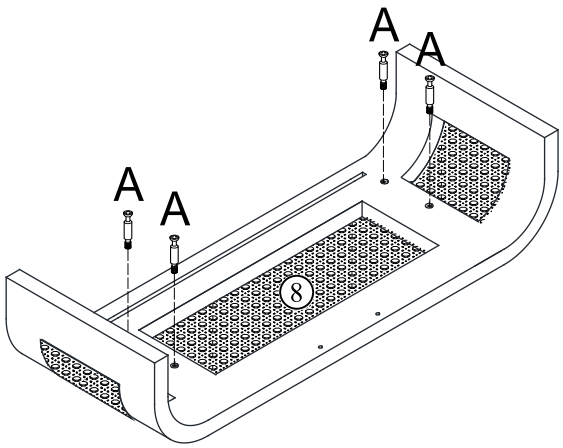

Step 7

B X 4
F X 2
H X 1

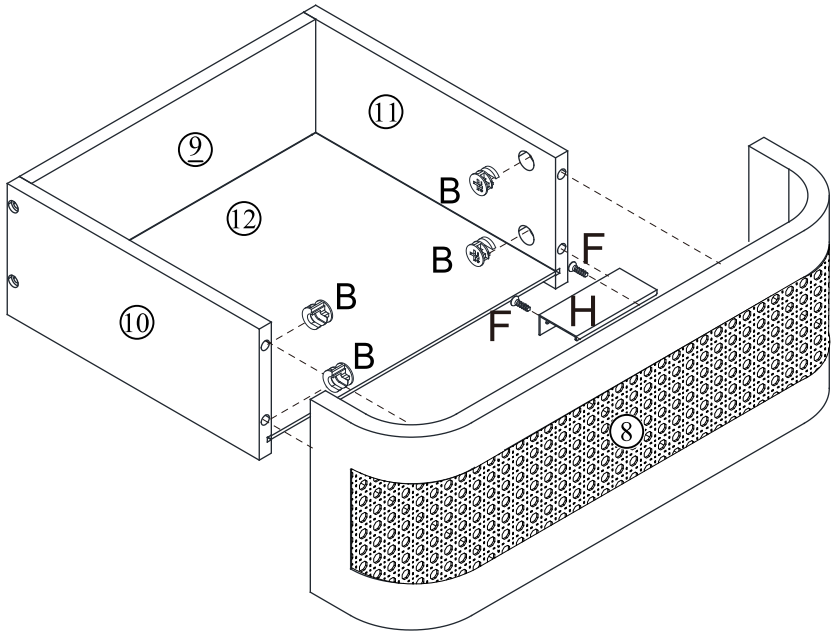

Step 8

I(DR) X 1
I(DL) X 1
N X 6

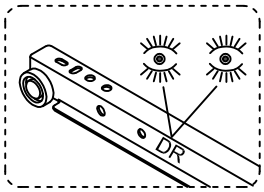

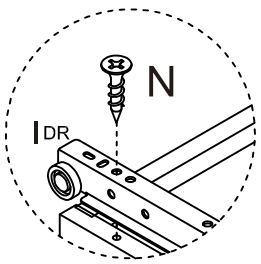

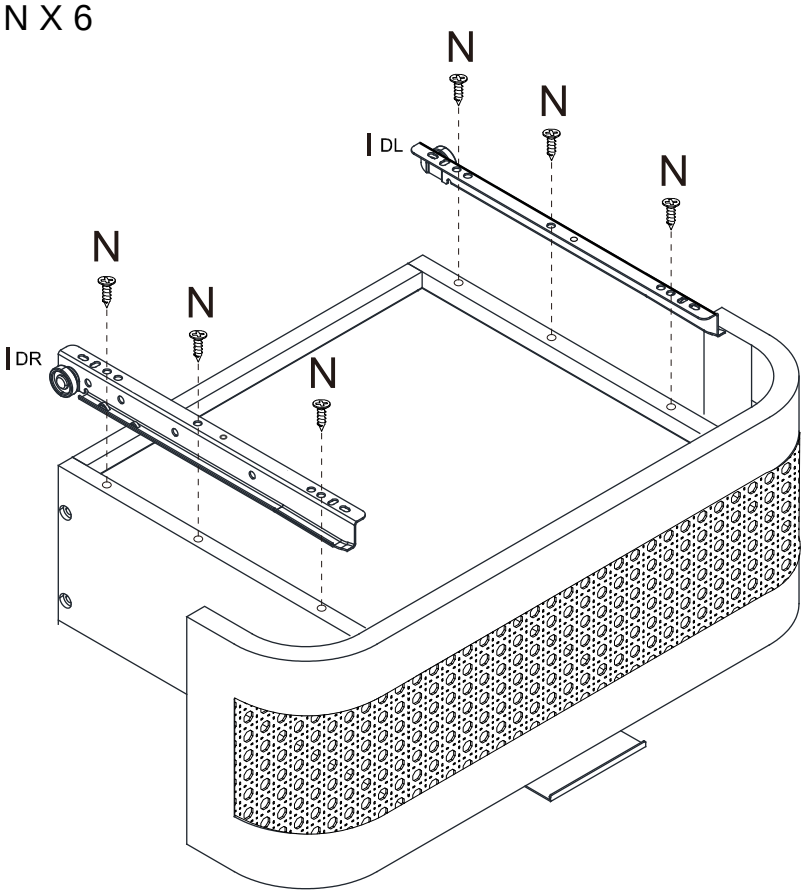

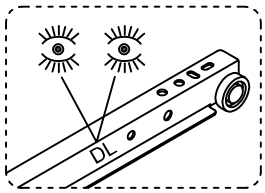

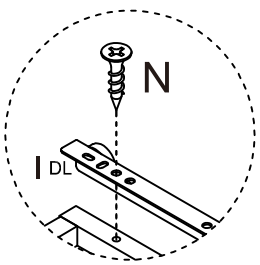

Step 9

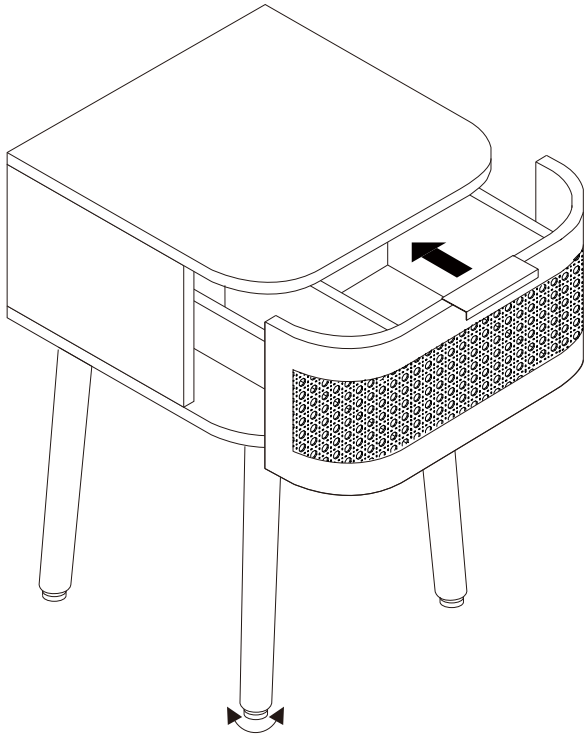

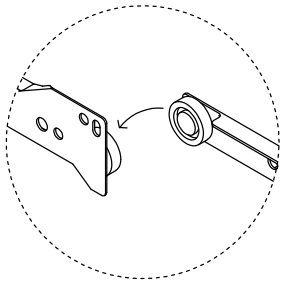

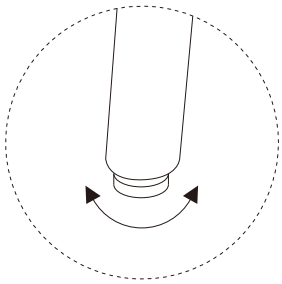

Step 10

E X 4
G X 4

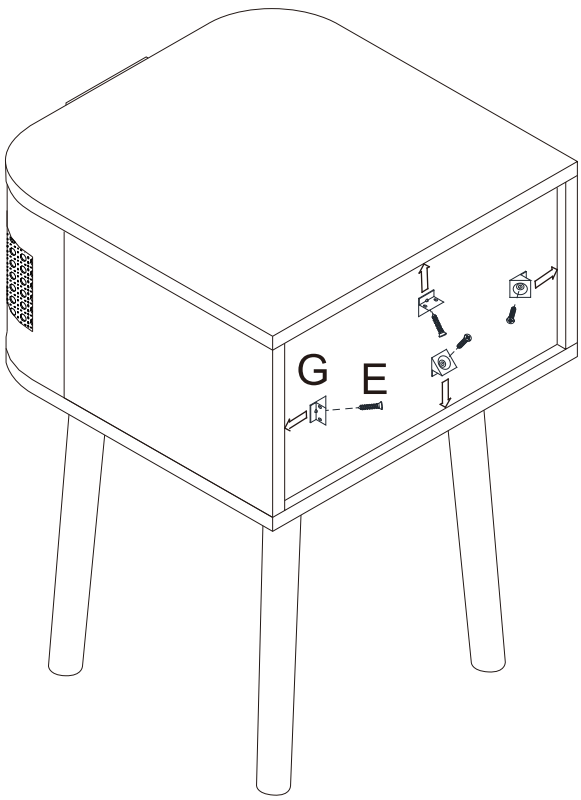

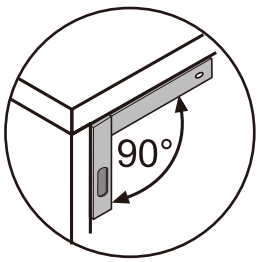

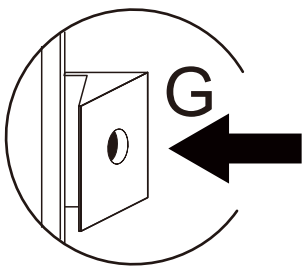

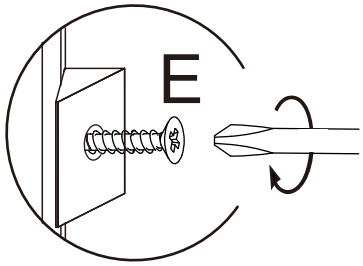

Step11

J X 2
M X 2

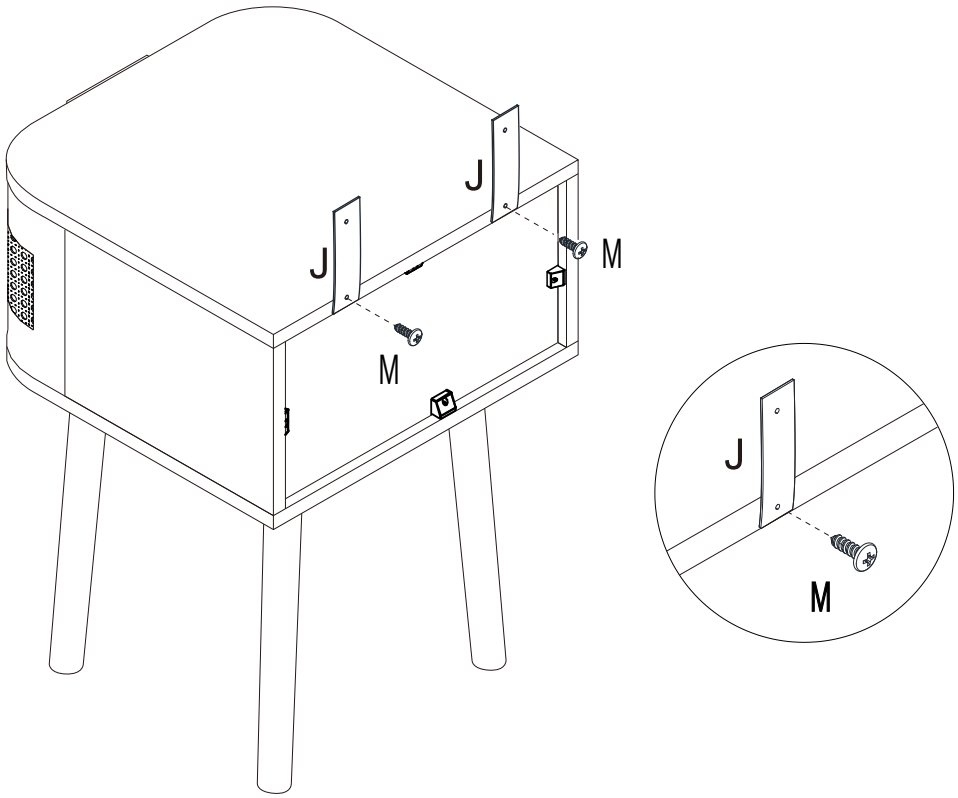

Step12

D X 2
K X 2

