SERA BATHROOM DESIGNS

MWT48X36RSB

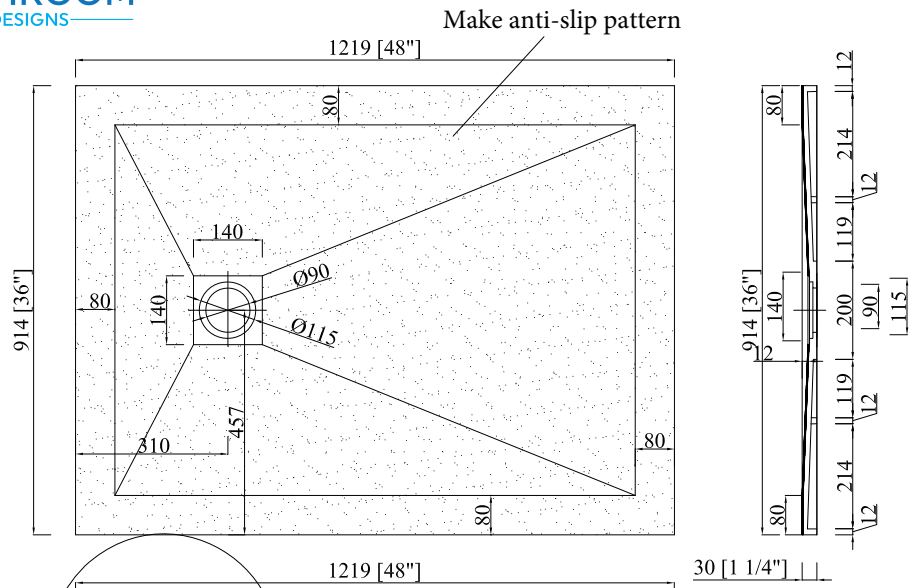

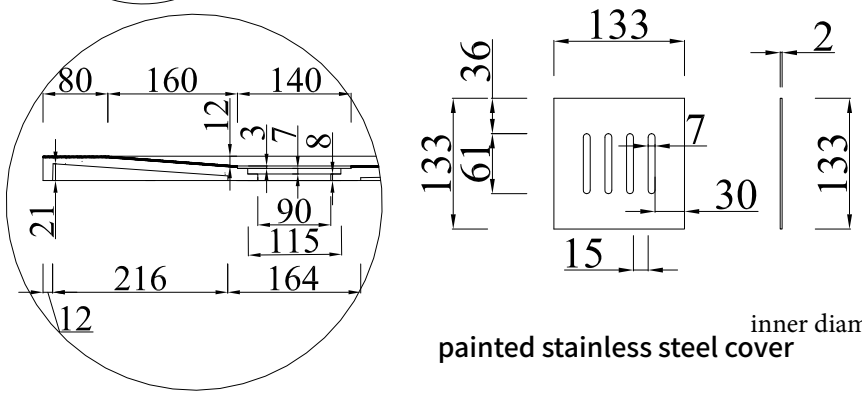

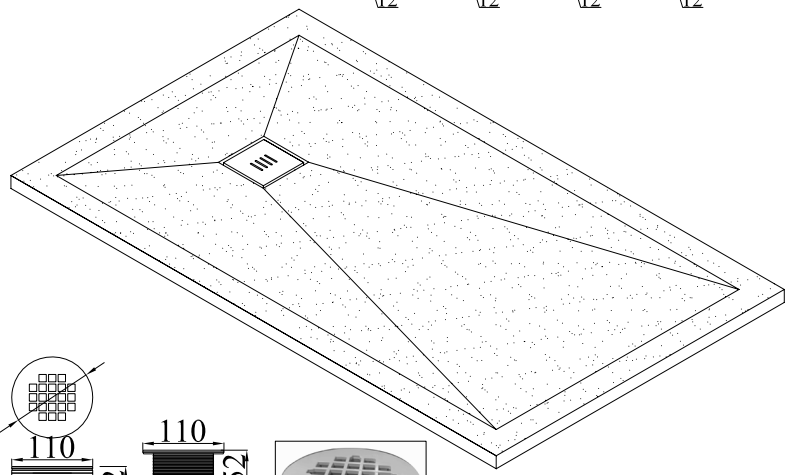

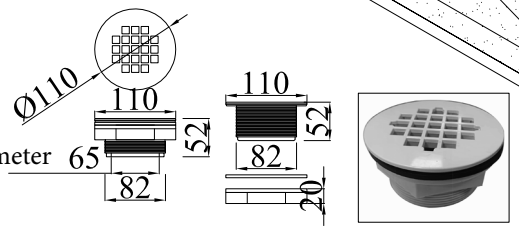

painted stainless steel cover

Drain

Size	>0-300mm	>300-500mm	>500-900mm	>900-1200mm	>1200mm以上		Model	GM-3131	Customer Model	CSTM-3117-4836	Drawing No	GM20240528-03
mm	±1	±2	±3	±4	±5							
1219mm*914mm*30mm									Edition	A/3		
							Tolerance	±2	Start Date	20240528		