ASSEMBLY INSTRUCTIONS

SKU:V-BC24-0624

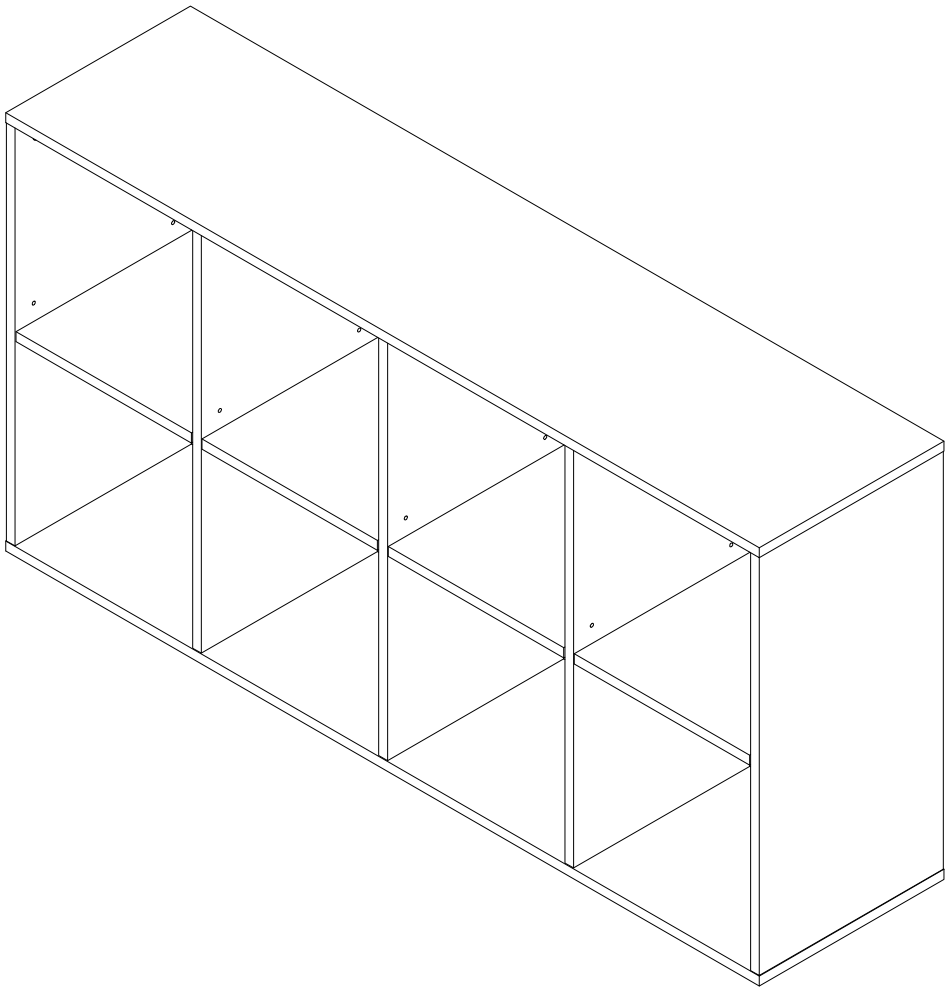

PARTS IDENTIFICATION

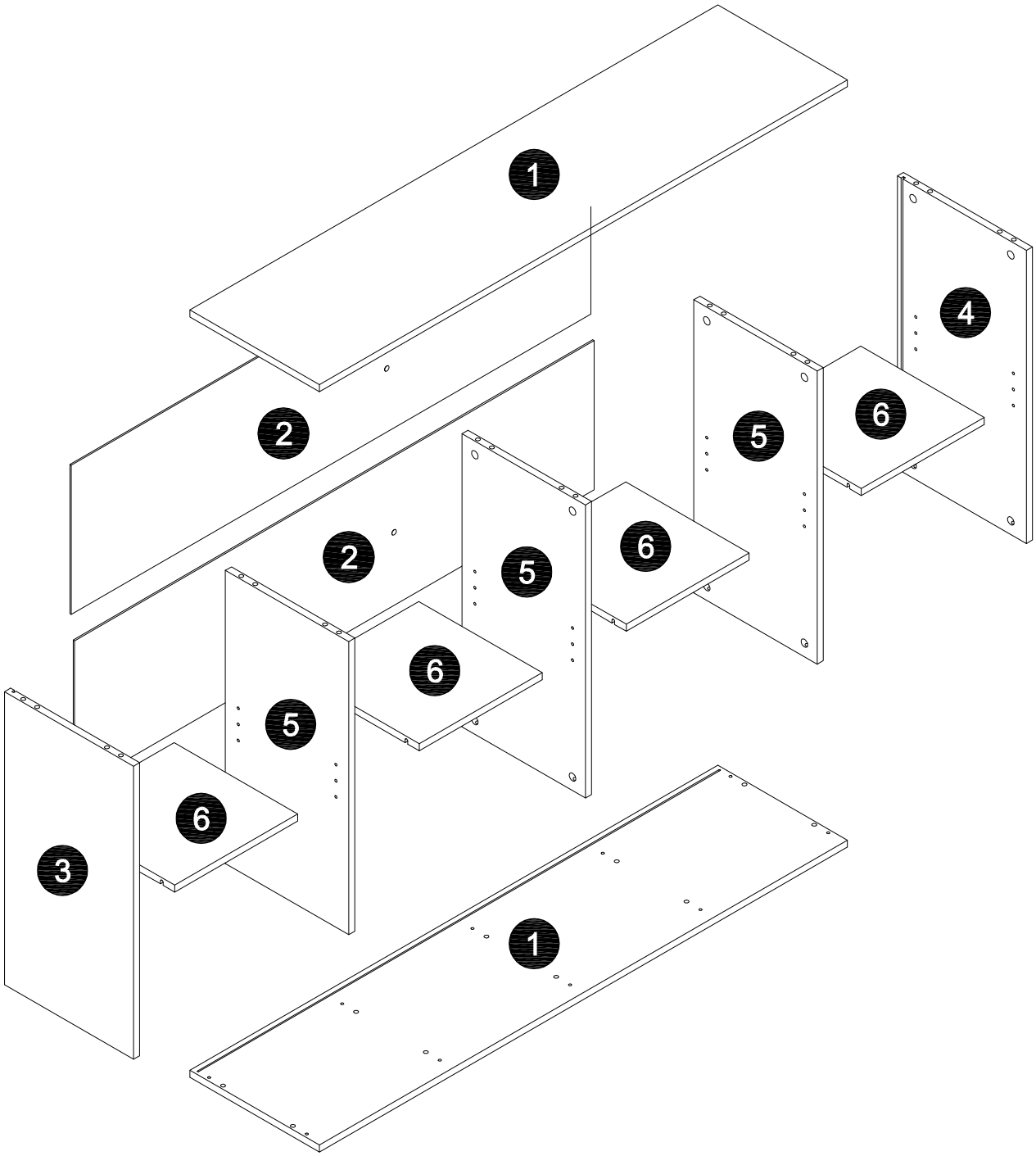

PARTS IDENTIFICATION

1 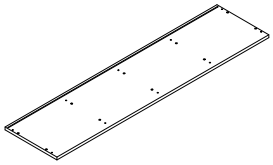 2PCS	2 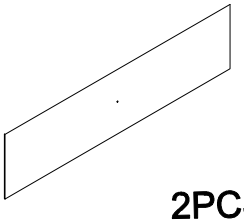 2PCS	3 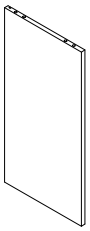 1PC	4 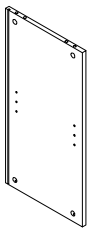 1PC
5 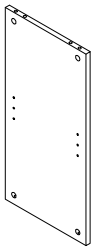 3PCS	6 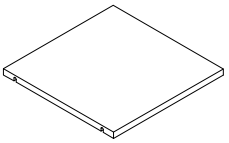 4PCS		

HARDWARE IDENTIFICATION

A	X20+2
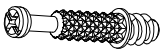	
Ø6x34mm	

B	X20+2
	
Ø15x9.5mm	

C	X20+2
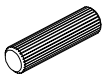	
Ø6x30mm	

D	X16+1
	
Ø5*13mm	

E	x4
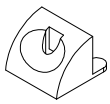	

F	x4
	
Ø3.5x15mm	

G	x2
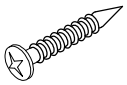	
Ø4x25mm	

H	x1
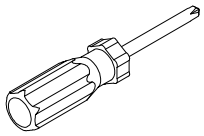	

I	x20+2
	

J	x 1
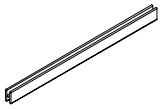	

Step 1

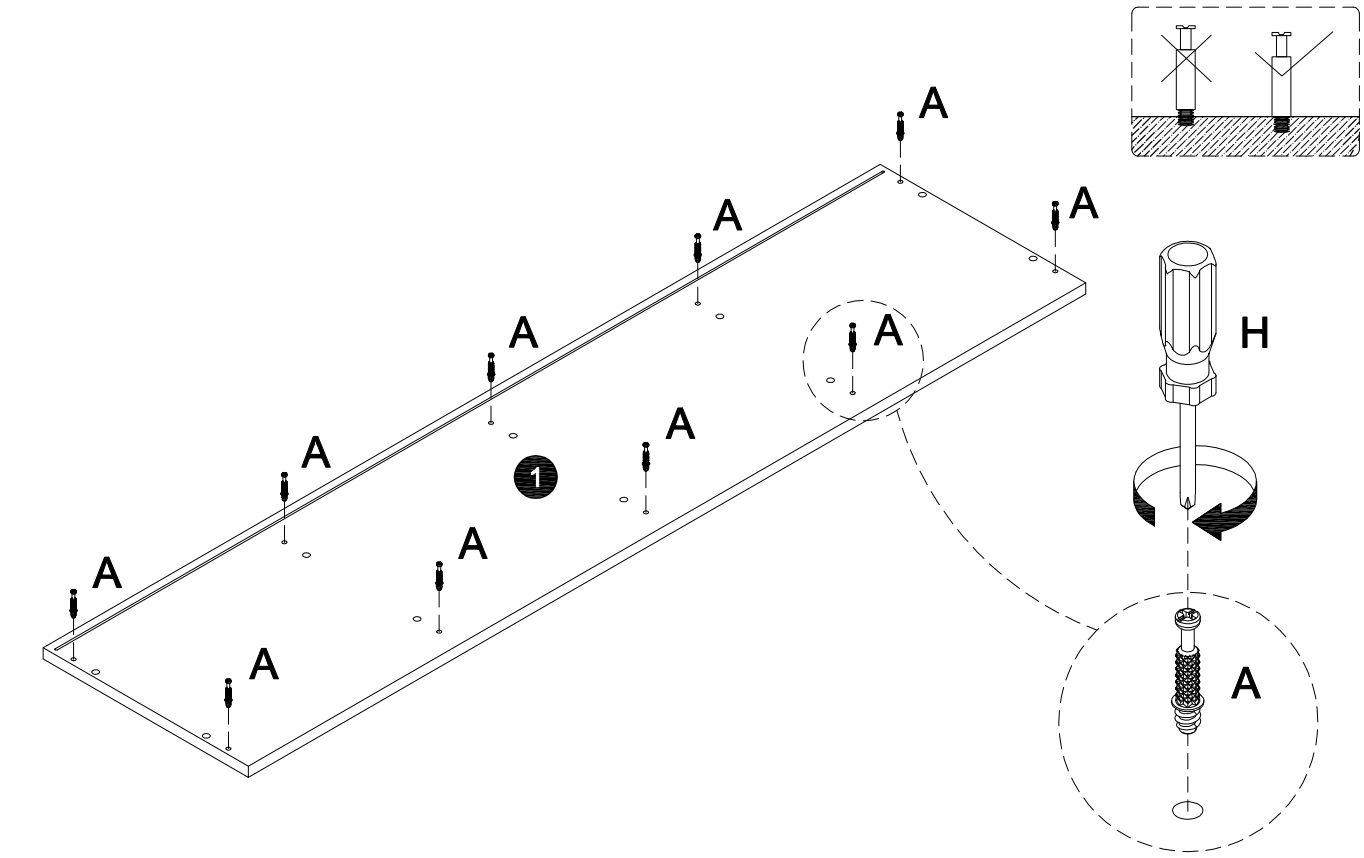

X2

A. x20PCS	
H. x1PC	

Step 2

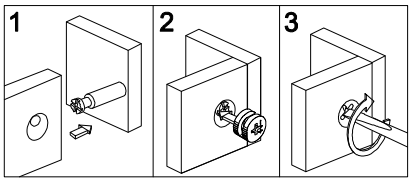

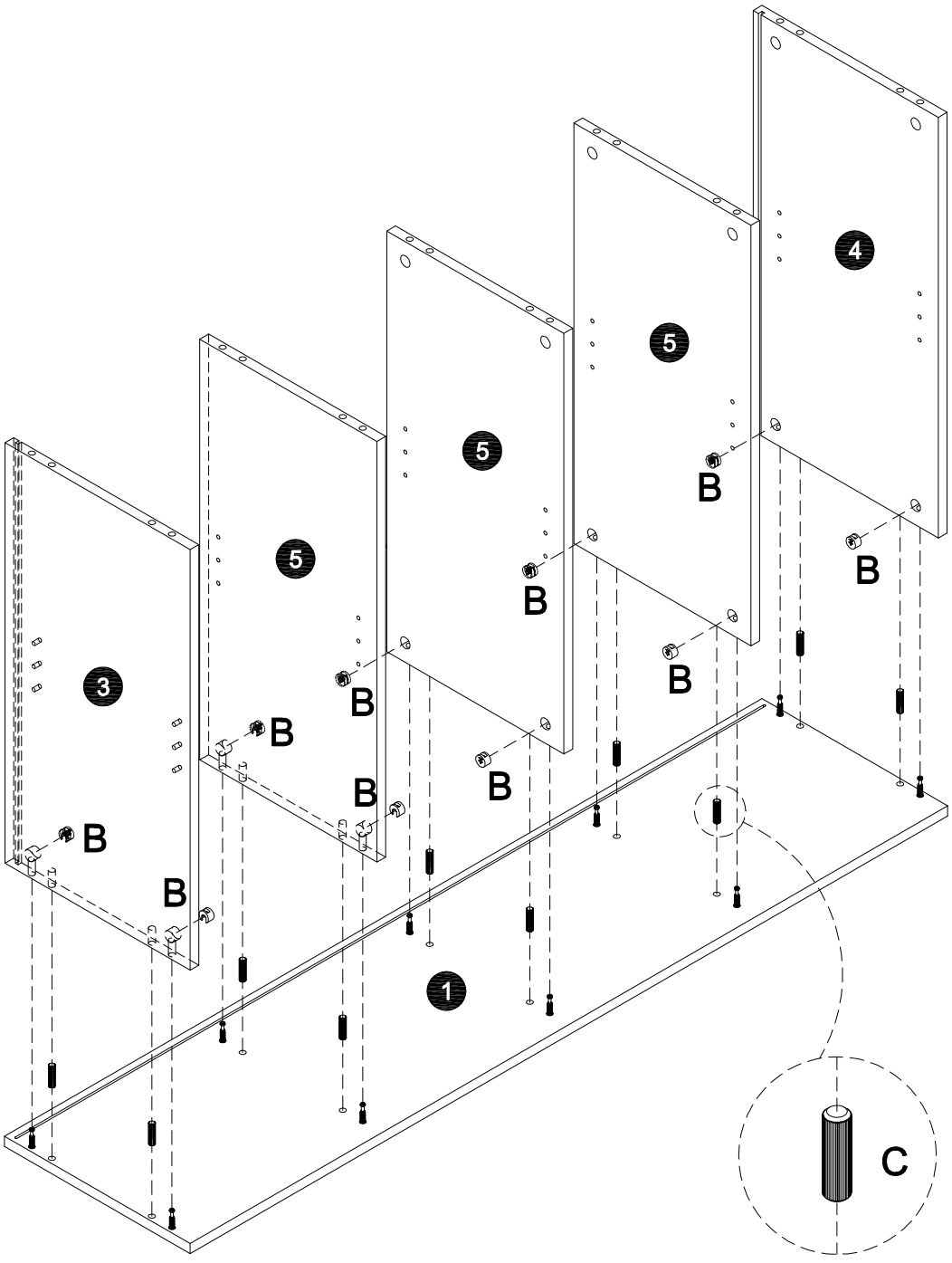

B. x10PCS	
C. x10PCS	

Step 3

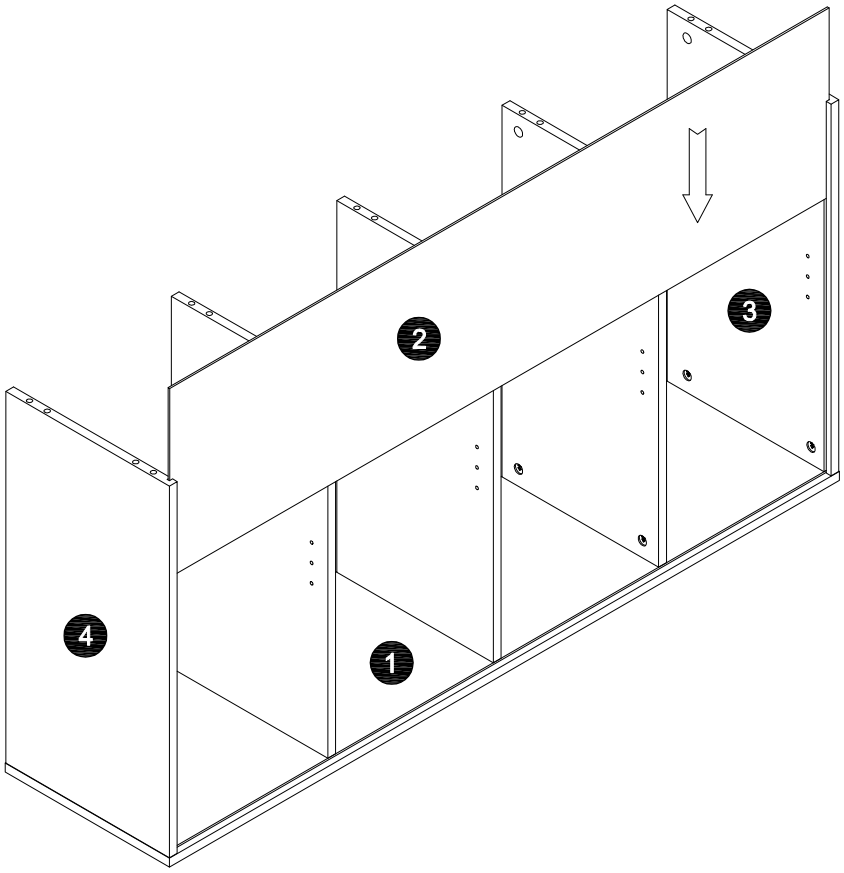

Step 4

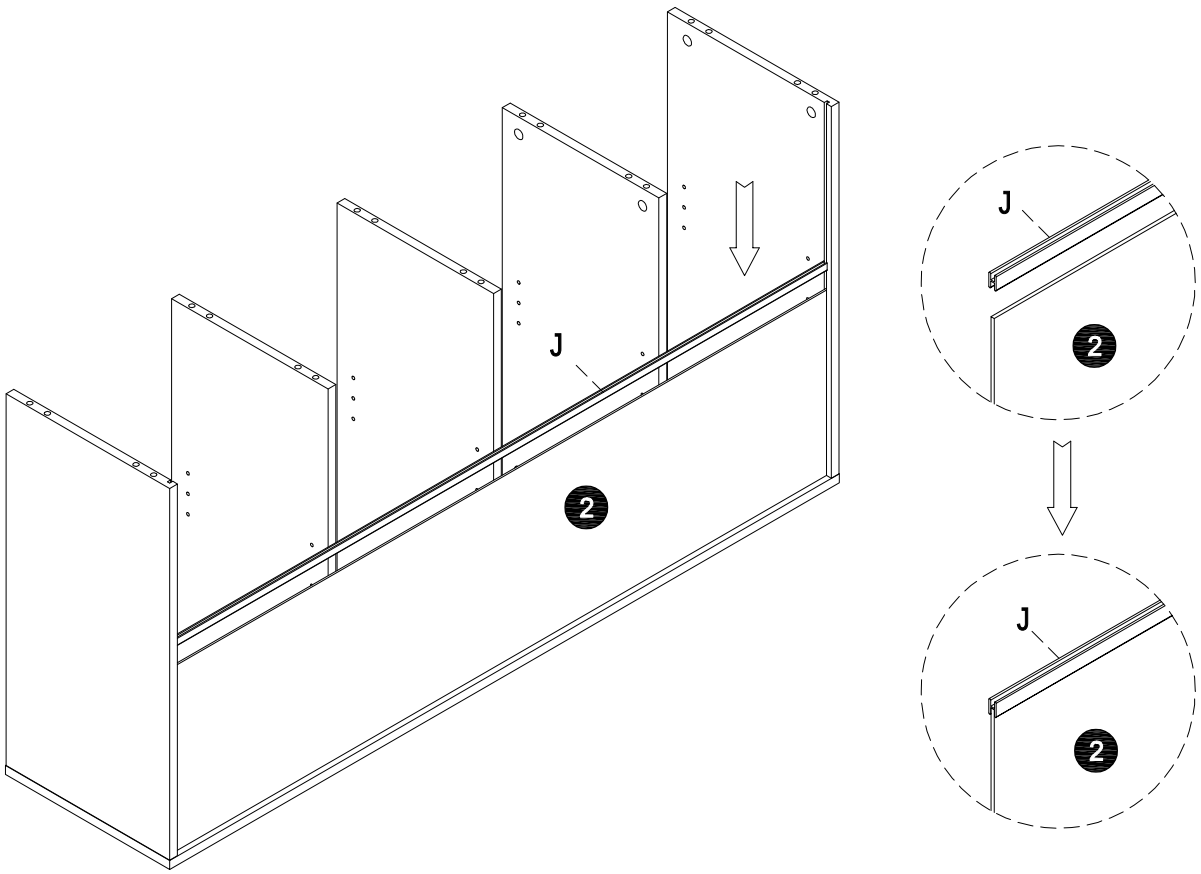

J . x1PC

Step 5

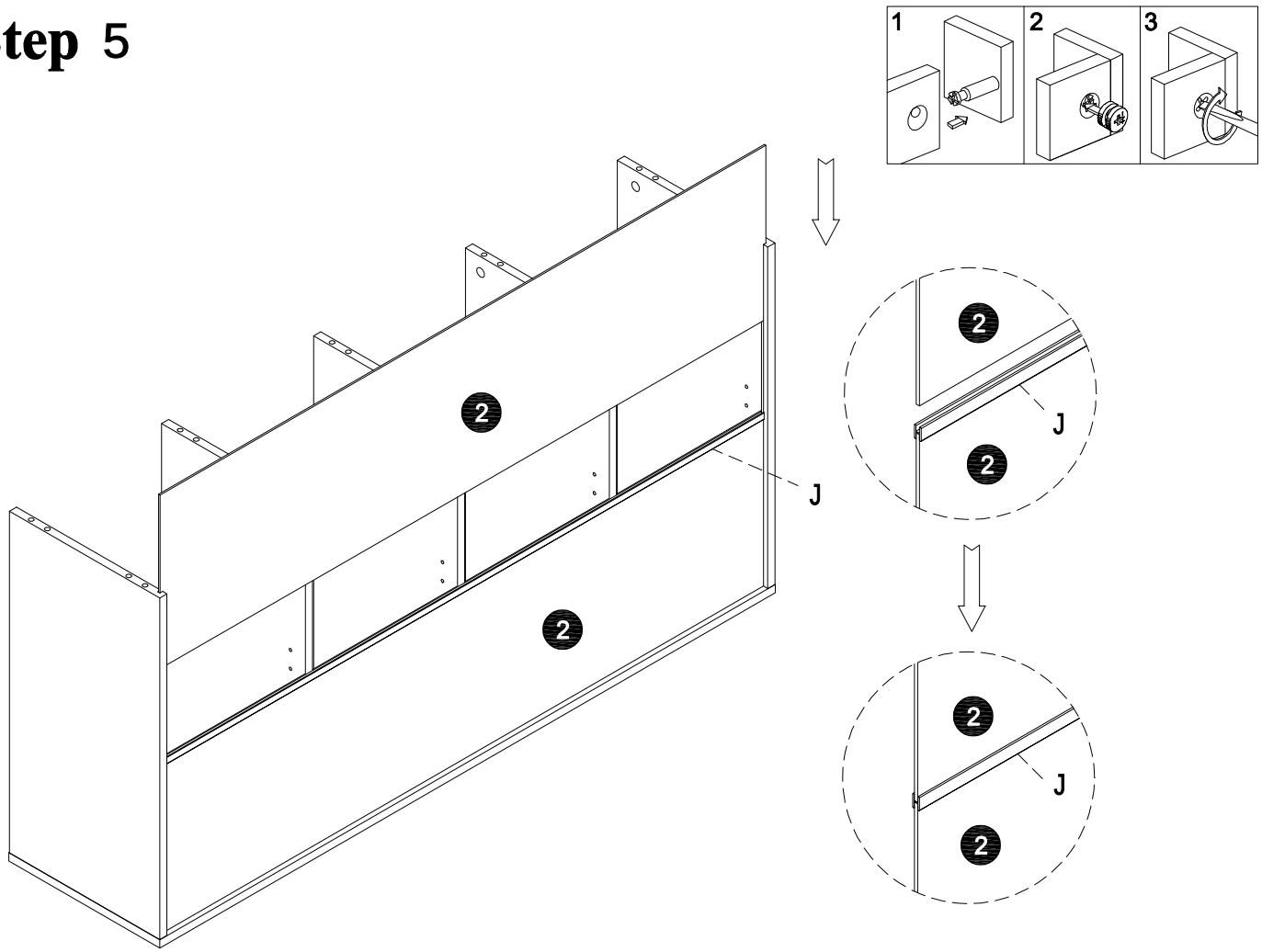

Step 6

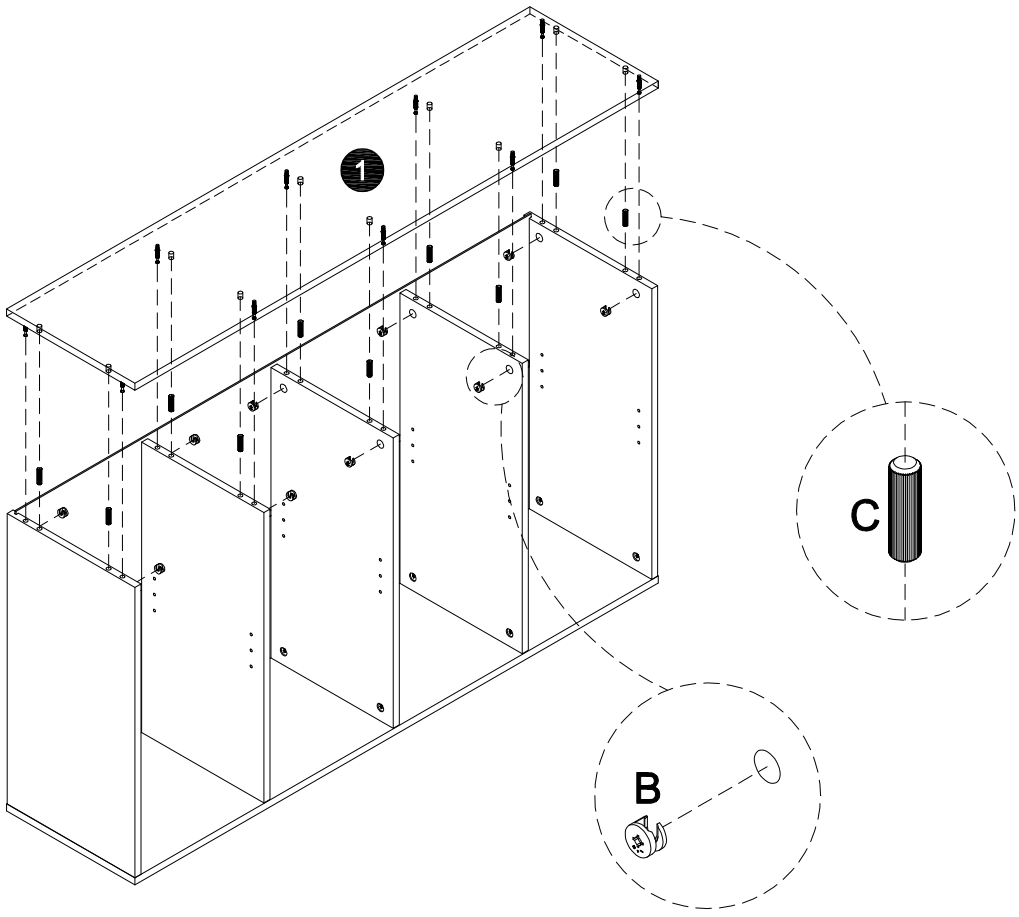

B. x10PCS	
C. x10PCS	

Step 7

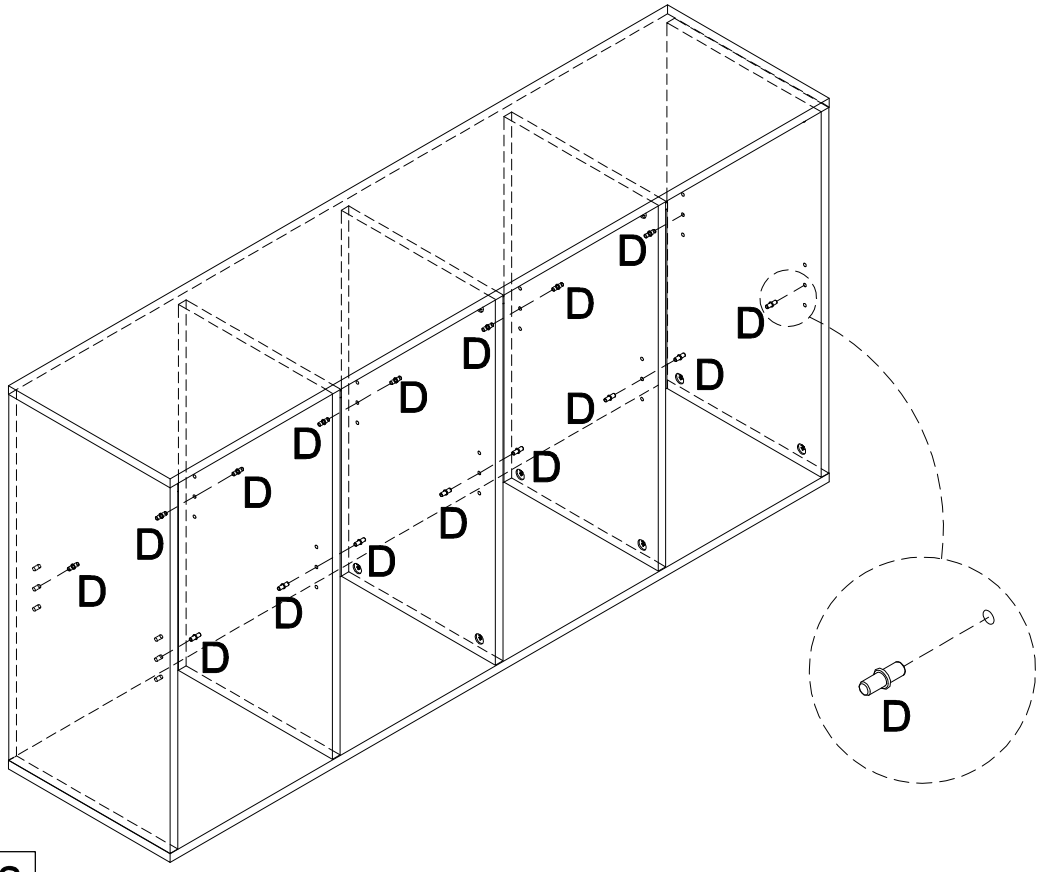

D. x16PCS

Step 8

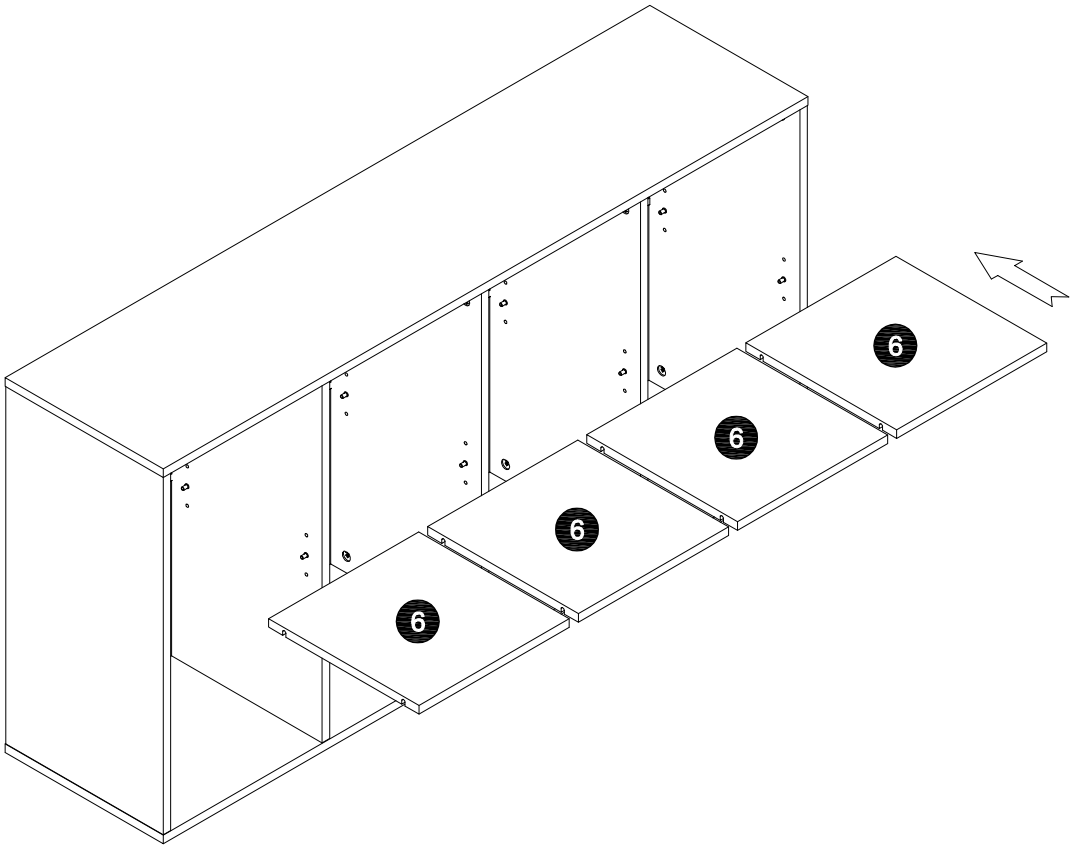

Step 9

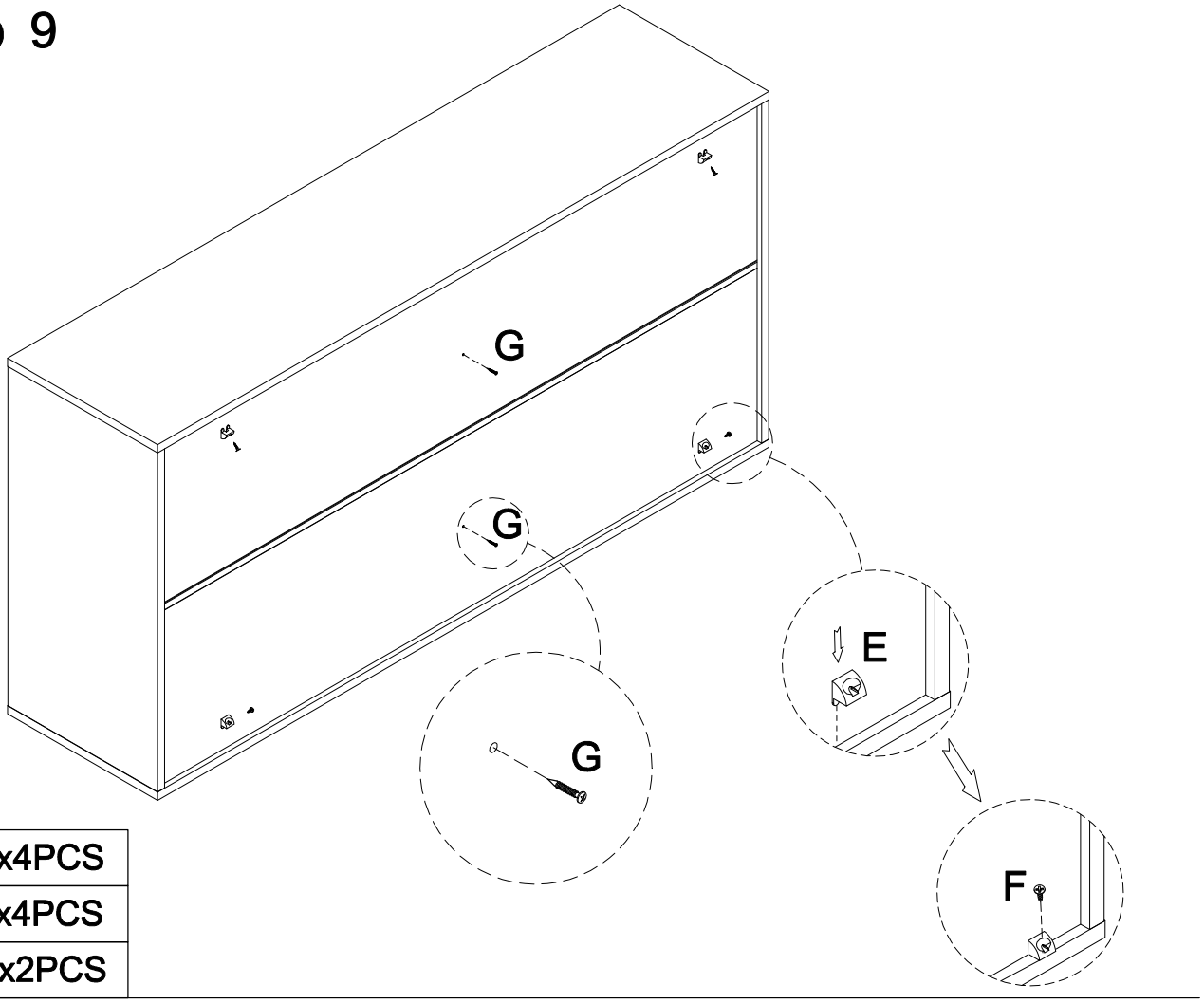

	E. x4PCS
	F. x4PCS
	G. x2PCS

Step 10

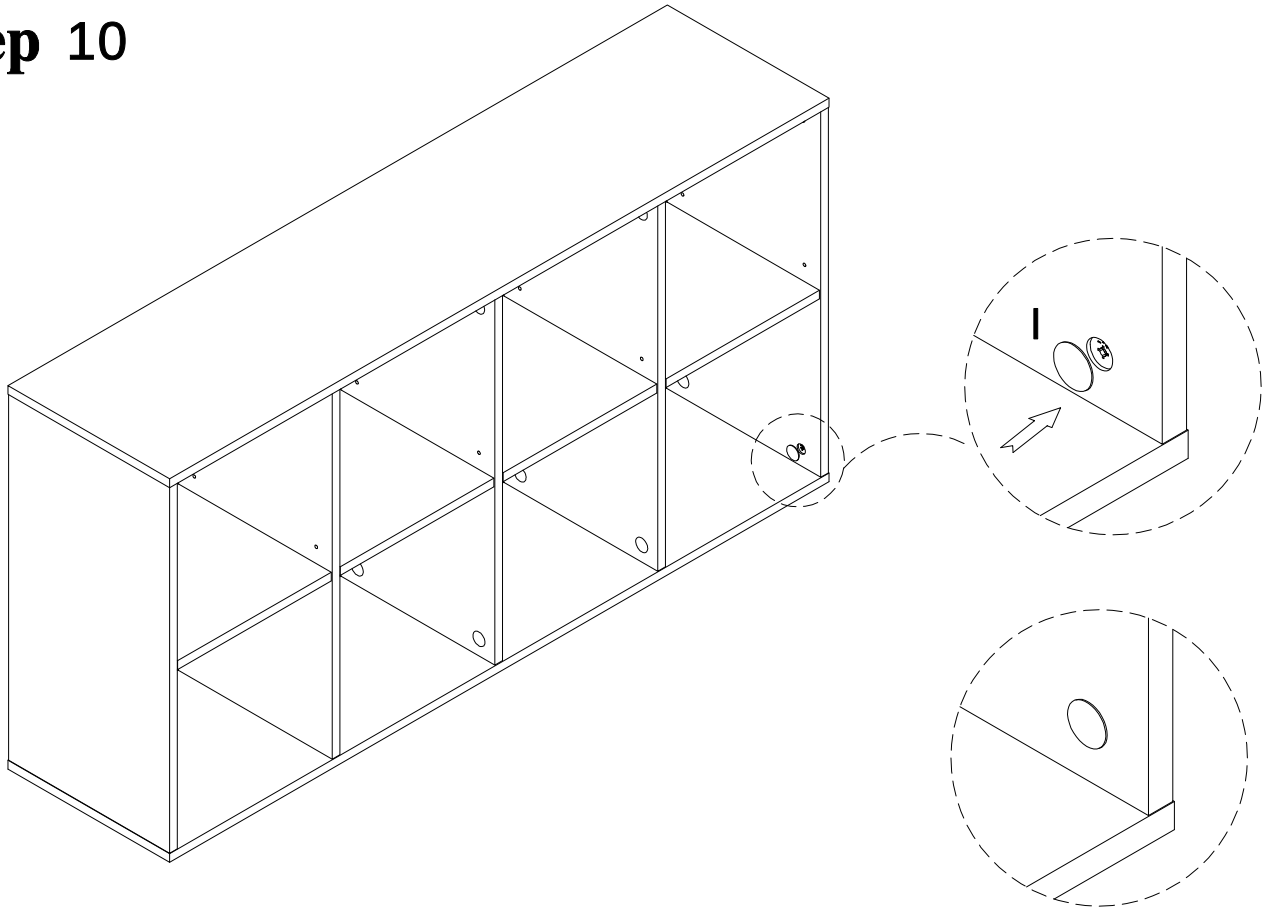

	I. x20PCS

FURNITURE CARE AND MAINTENANCE

Thank you for your purchase. We want your item to last as long as possible. To ensure the product gives you years of service, please refer to this care and maintenance guide.



MAINTENANCE

Tighten all bolts and screws again within the first 2 weeks of assembly
Check the tightness of all bolts every 2 months, tighten them if necessary



CLEANING

Clean the surface of the MDF and PB (medium - density fiberboard) with a lightly dampened cloth.
Small amount of mild soap can be used if necessary

- **Dry the surface immediately after cleaning.**

⚠ **DO NOT use bleach or alcohol detergent to clean the surface.**
⚠ **DO NOT apply wood treatment on parts made with MDF/PB.**

Medium - density fiberboard and PB will swell and distort when suffer from water damage. Make sure to dry the furniture immediately after cleaning