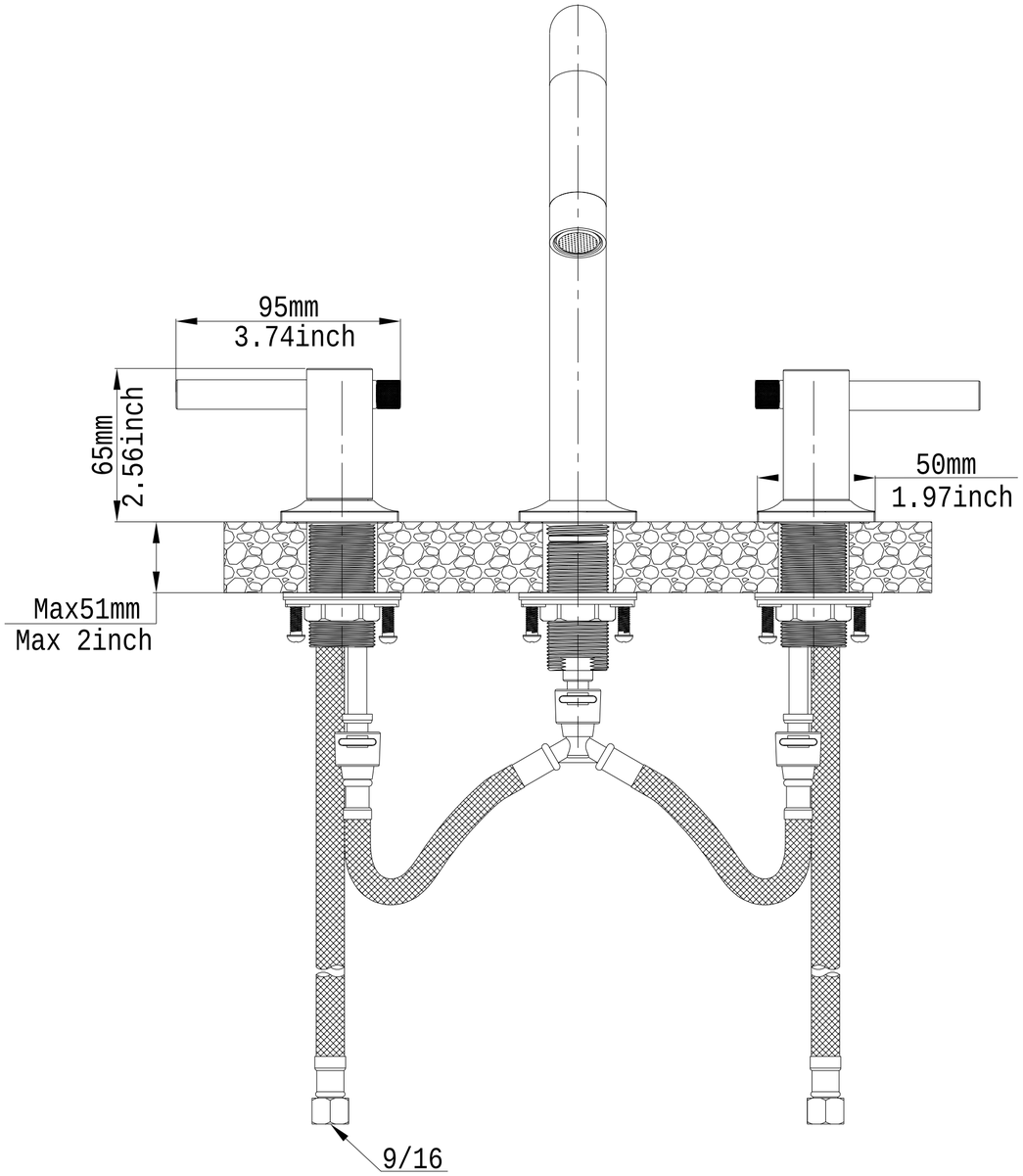
95mm
3.74inch
65mm
2.56inch
50mm
1.97inch
Max51mm
Max 2inch
9/16

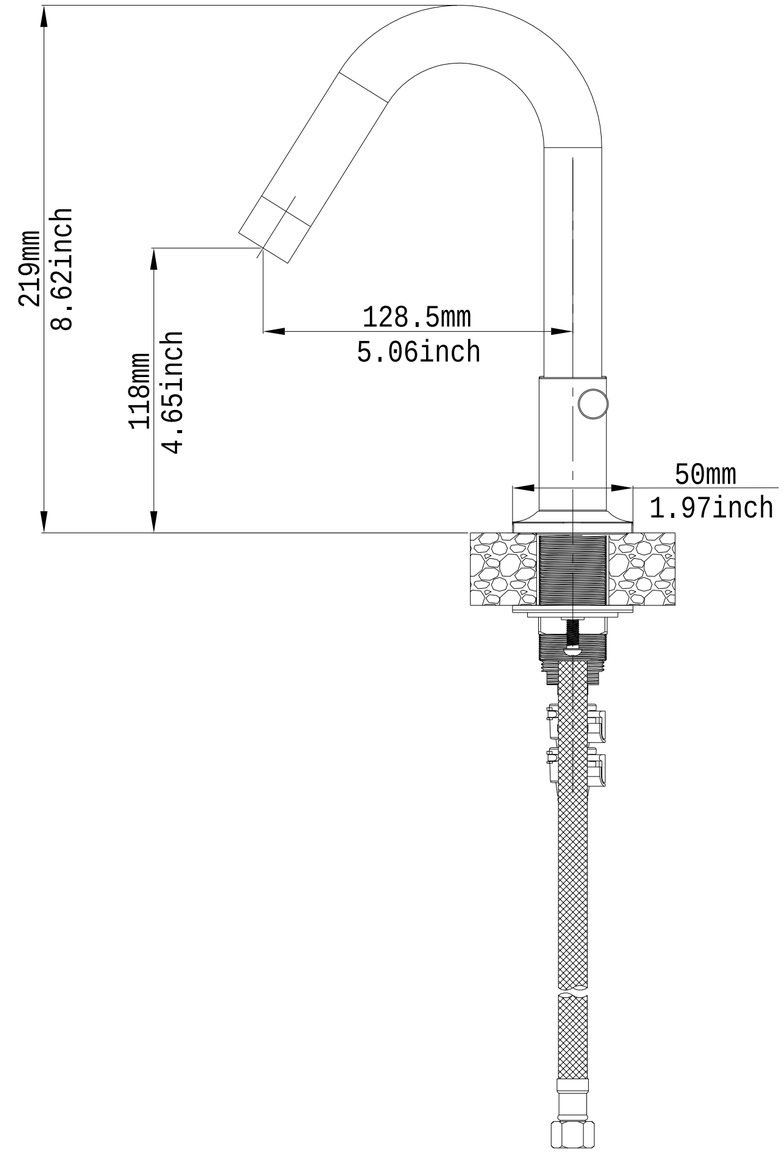
219mm
8.62inch
118mm
4.65inch
128.5mm
5.06inch
50mm
1.97inch

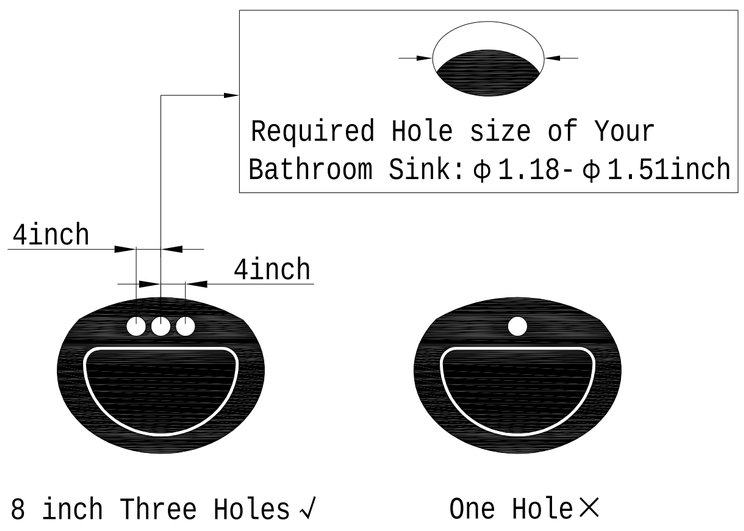
Required Hole size of Your
Bathroom Sink: ϕ1.18- ϕ1.51inch
4inch
4inch
8 inch Three Holes √
One Hole×

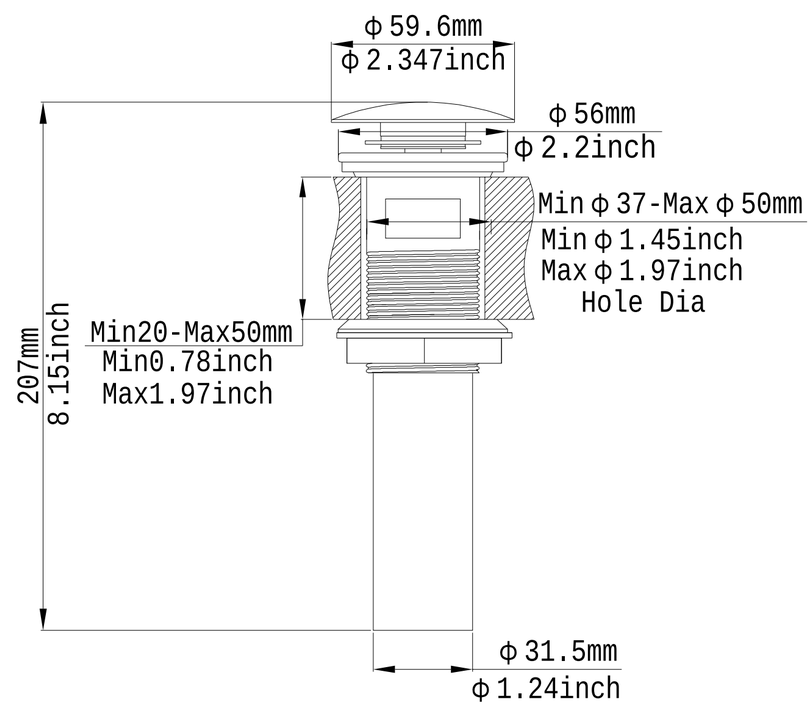
ϕ59.6mm
ϕ2.347inch
ϕ56mm
ϕ2.2inch
Min ϕ37-Max ϕ50mm
Min ϕ1.45inch
Max ϕ1.97inch
Hole Dia
207mm
8.15inch
Min20-Max50mm
Min0.78inch
Max1.97inch
ϕ31.5mm
ϕ1.24inch