TV STAND-N710P568002P

Assembly Instructions - Please keep for future reference.

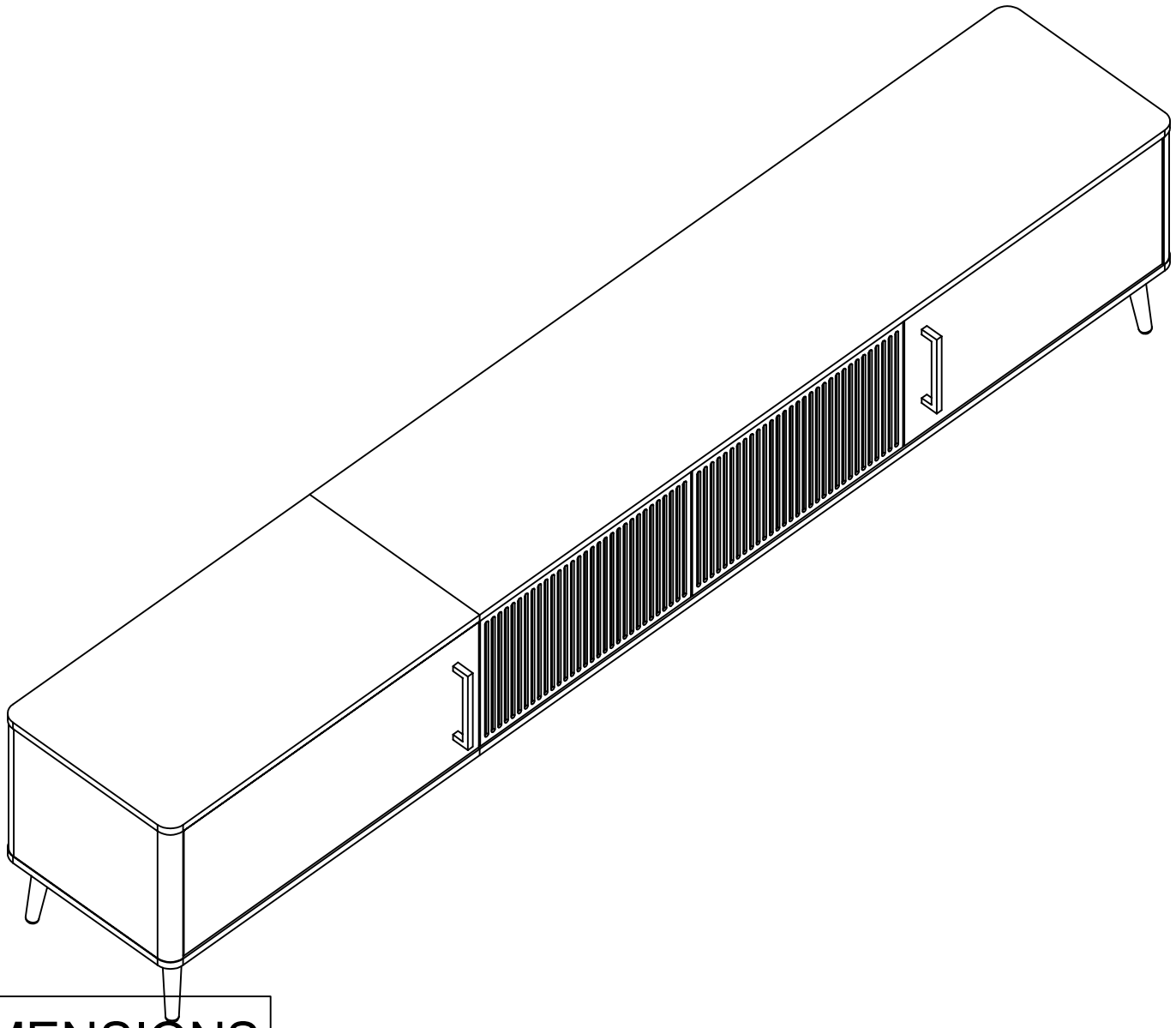

DIMENSIONS
width-88.58inch Depth-15.75inch Height-19.29inch

Important - Please read these instructions fully before starting assembly.

components - fittings

Please check you have all the panels listed below.

Note: The quantities below are the correct amount to complete the assembly. In some cases more fittings may be supplied than are required.

N710P568002P

1 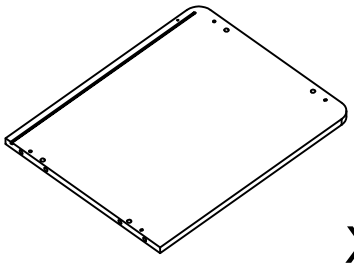 X 1	2 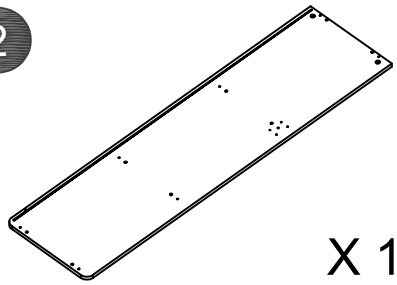 X 1	3 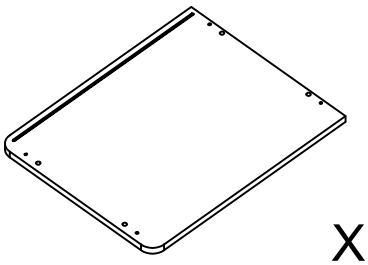 X 1
4 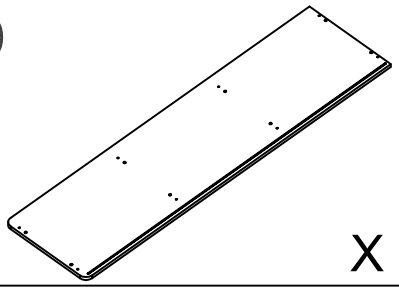 X 1	5 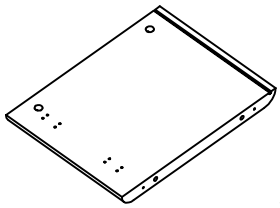 X 1	6 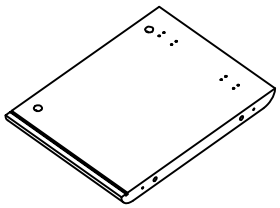 X 1
7 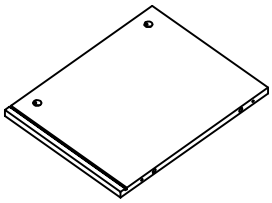 X 1	8 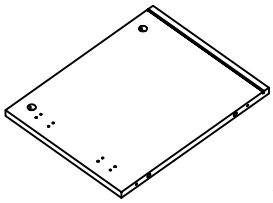 X 1	9 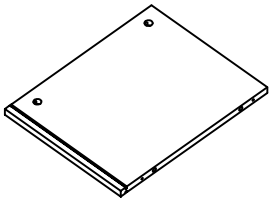 X 1
10 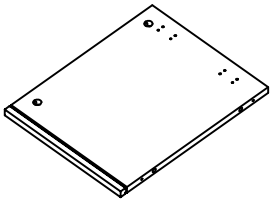 X 1	11 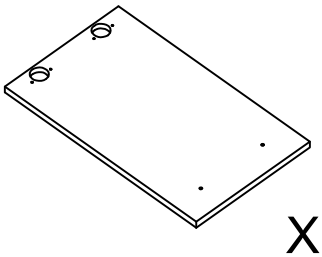 X 2	12 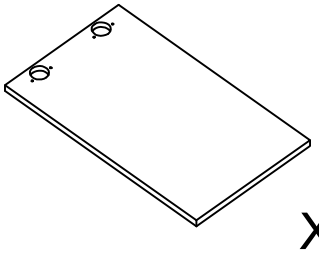 X 2
13 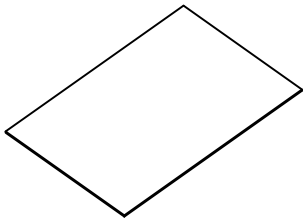 X 1	14 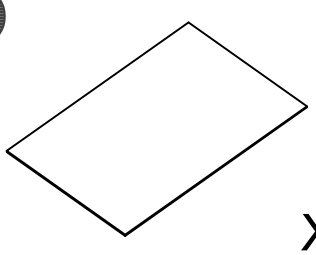 X 1	15 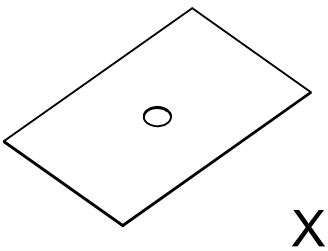 X 2
16  X 4	17  X 3	

components - fittings

Please check you have all the panels listed below.

Note: The quantities below are the correct amount to complete the assembly. In some cases more fittings may be supplied than are required.

Hardware-Liste :N710P568002P

A X 16 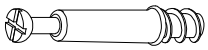 M6x35mm	B X 16  Φ15mm	C X 28  Φ8x30mm	D X 14 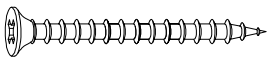 M4x35mm
E X 32 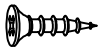 M3.5x14mm	F X 68 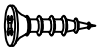 M3.5x14mm	G X 16 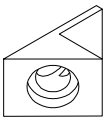	H X 3 
I X 4 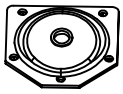	J X 3 	K X 2 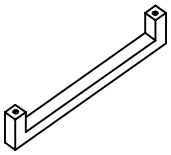	L X 4  M4x25mm
M X 4 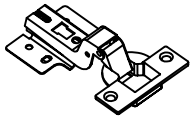 Large Curved	N X2 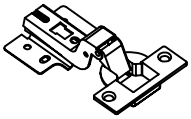 Small Curved	O X 2 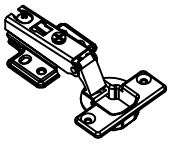	P X 4  EVA
Q X 12  Ø20mm	R X 2 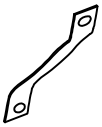	S X 2 	T X 1 
U X 2 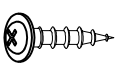 M4x14mm	V X 2 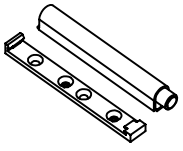		

Assembly Instructions

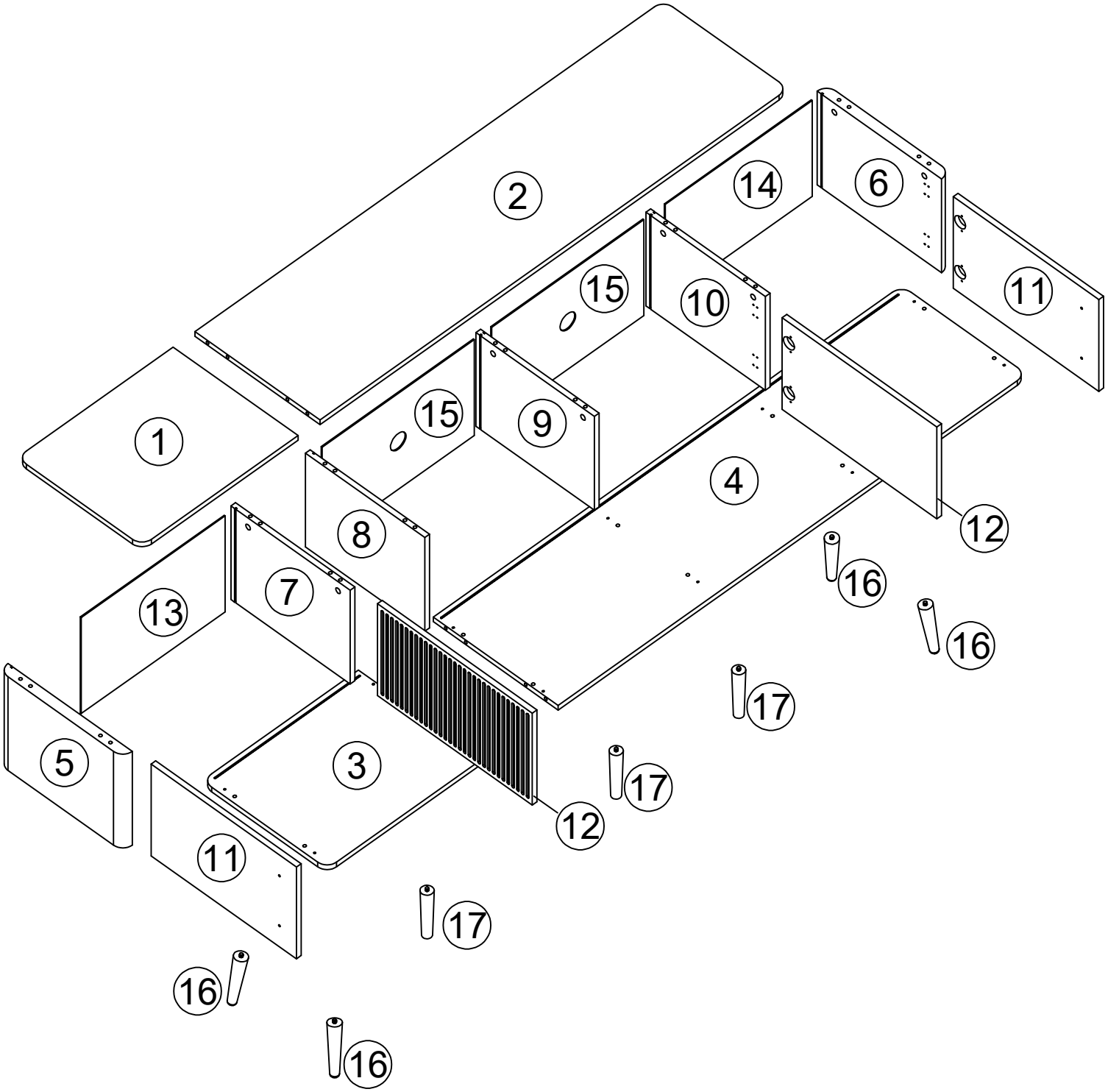

Assembly Instructions

STEP 1

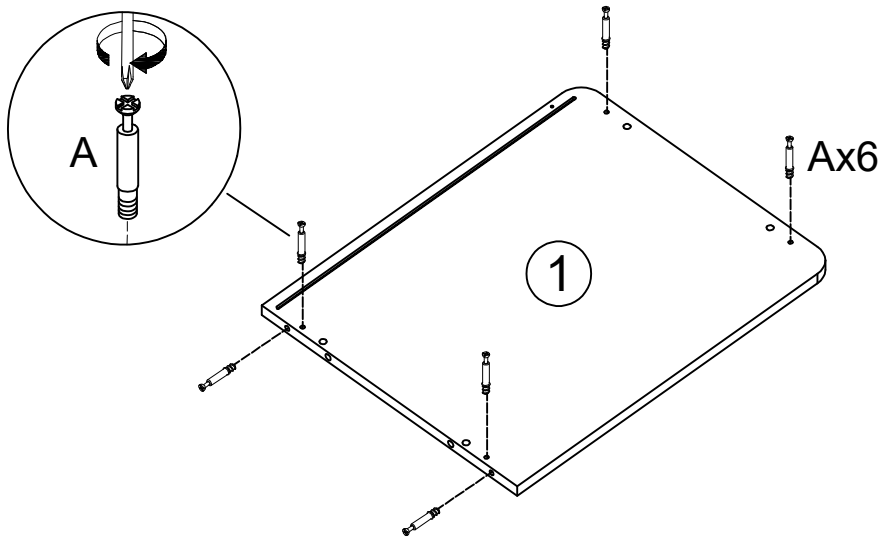

A	x6
	
M6x35mm	

STEP 2

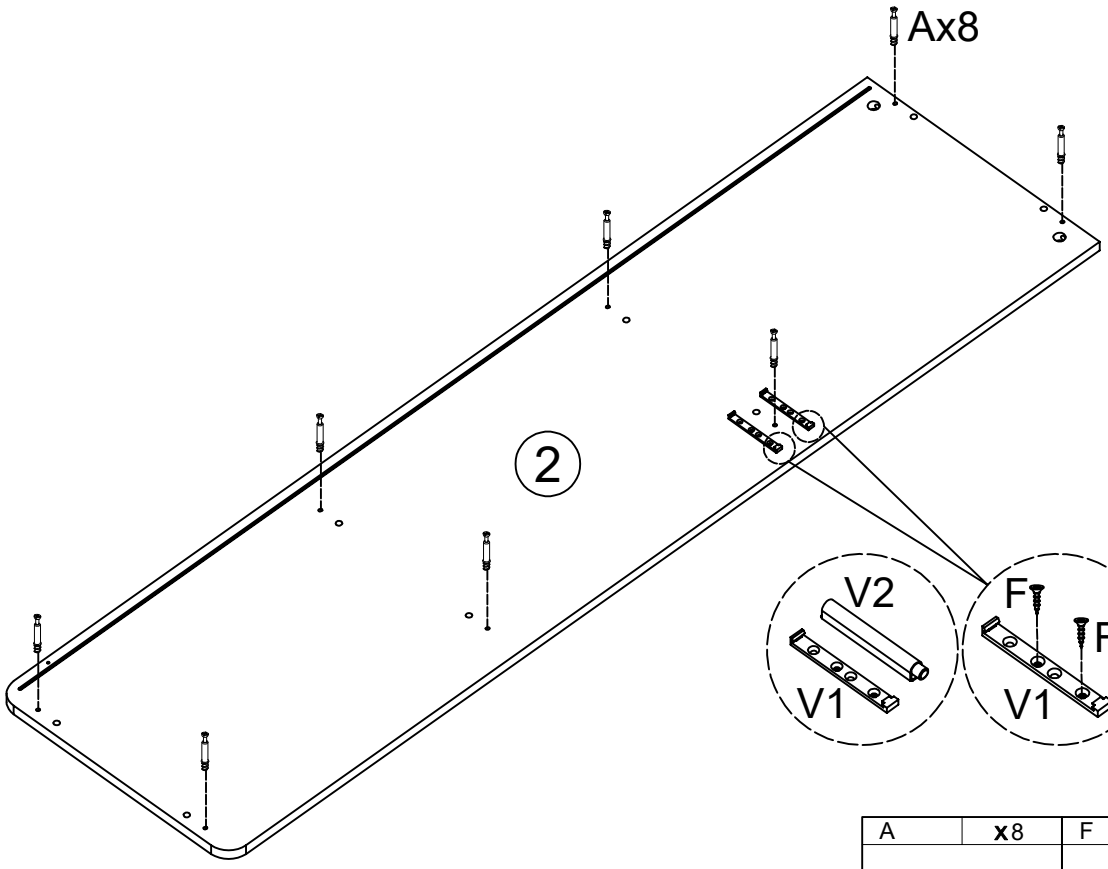

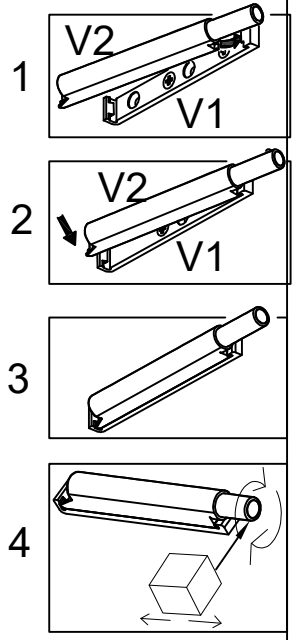

A	x8	F	x4	V	x2
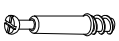		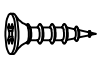		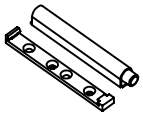	
M6x35mm		M3.5x14mm			

Assembly Instructions

STEP 3

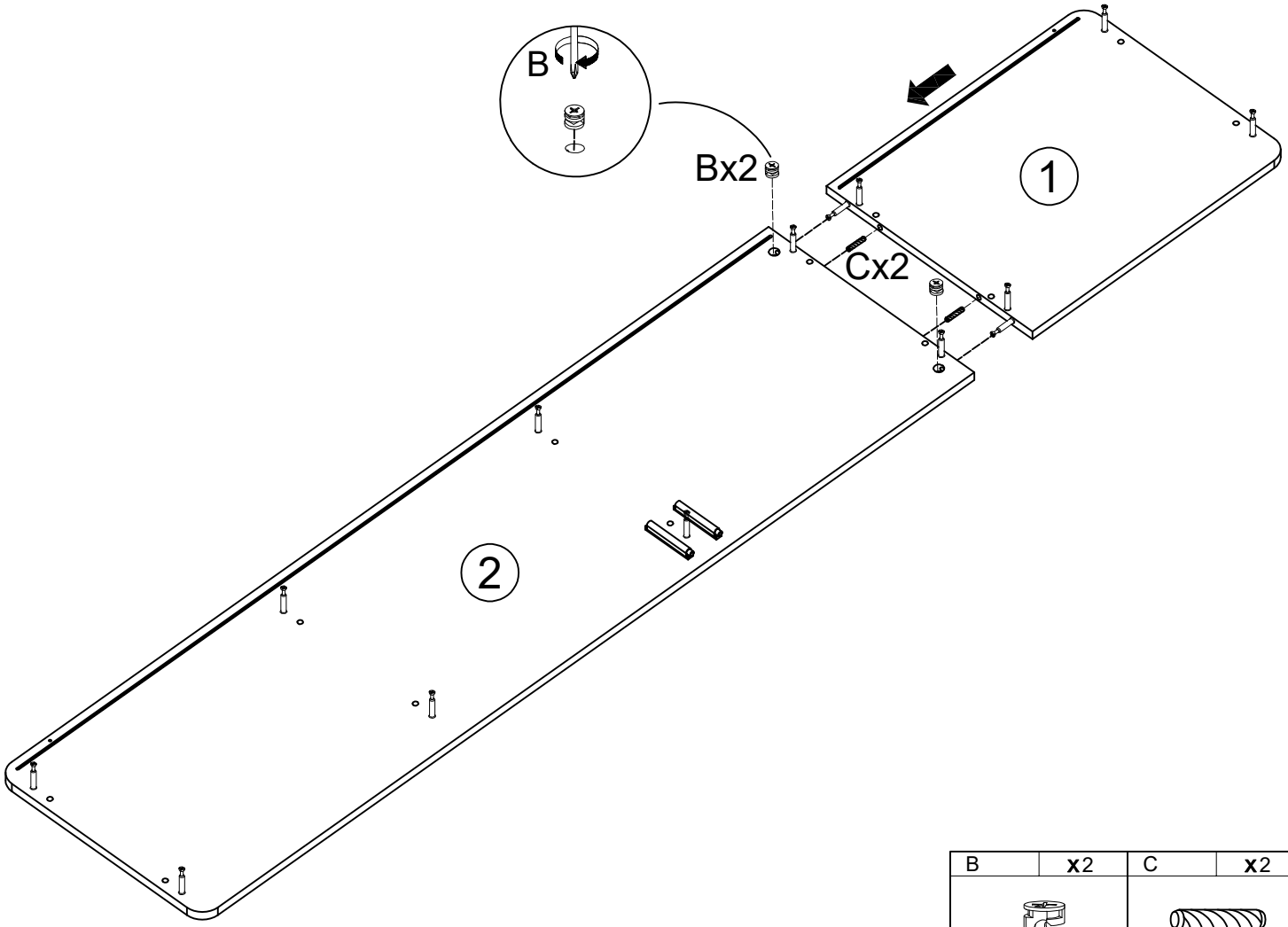

B	x2	C	x2
Ø15mm		Φ8x30mm	

STEP 4

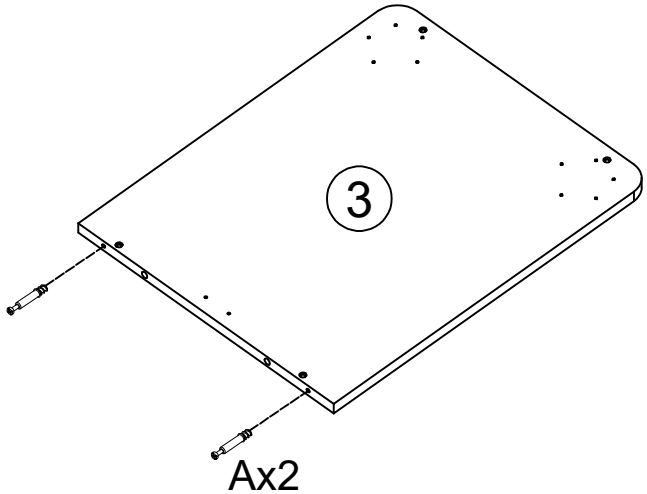

A	x2
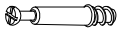	
M6x35mm	

Assembly Instructions

STEP 5

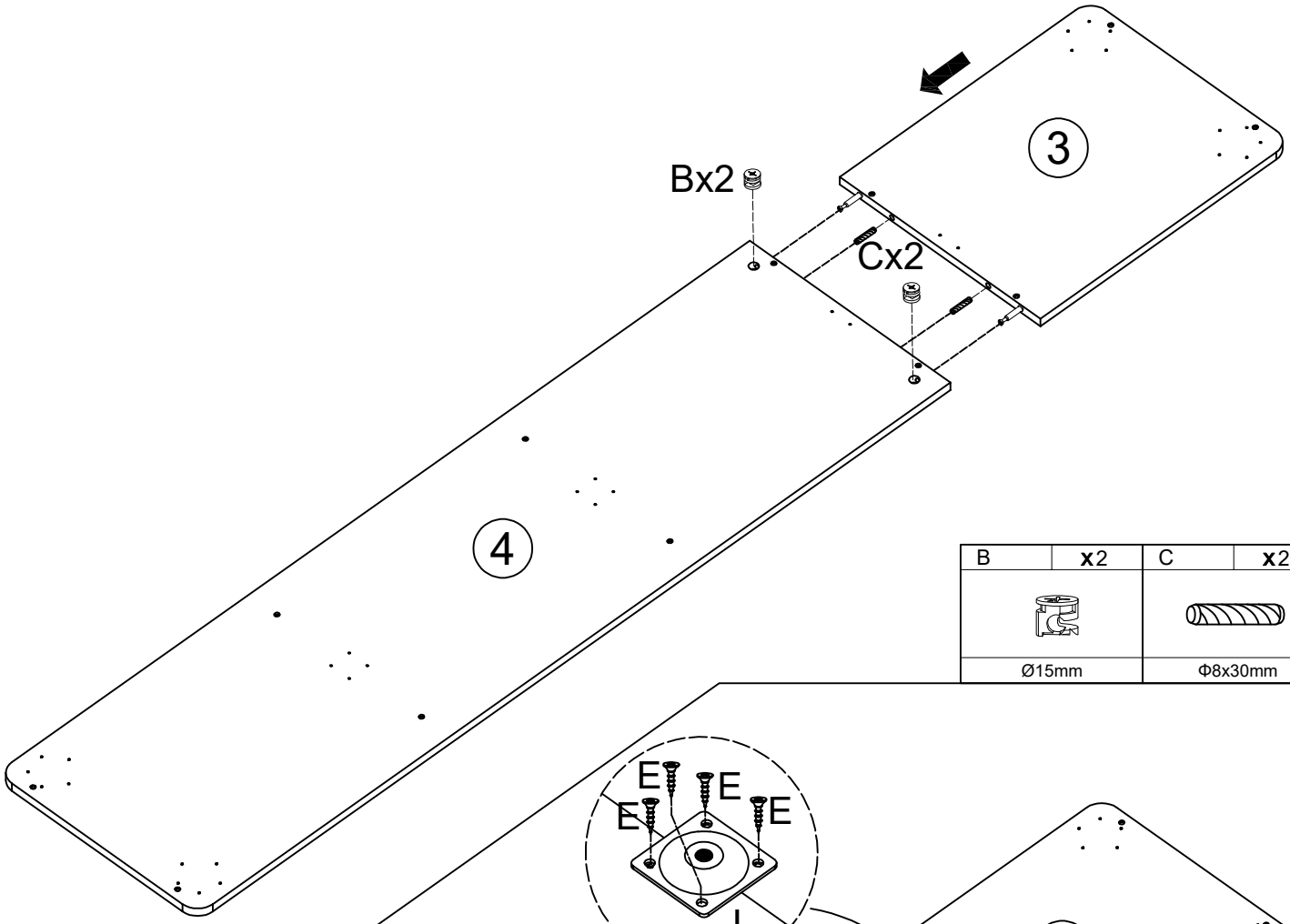

B	x2	C	x2
Ø15mm		Φ8x30mm	

STEP 6

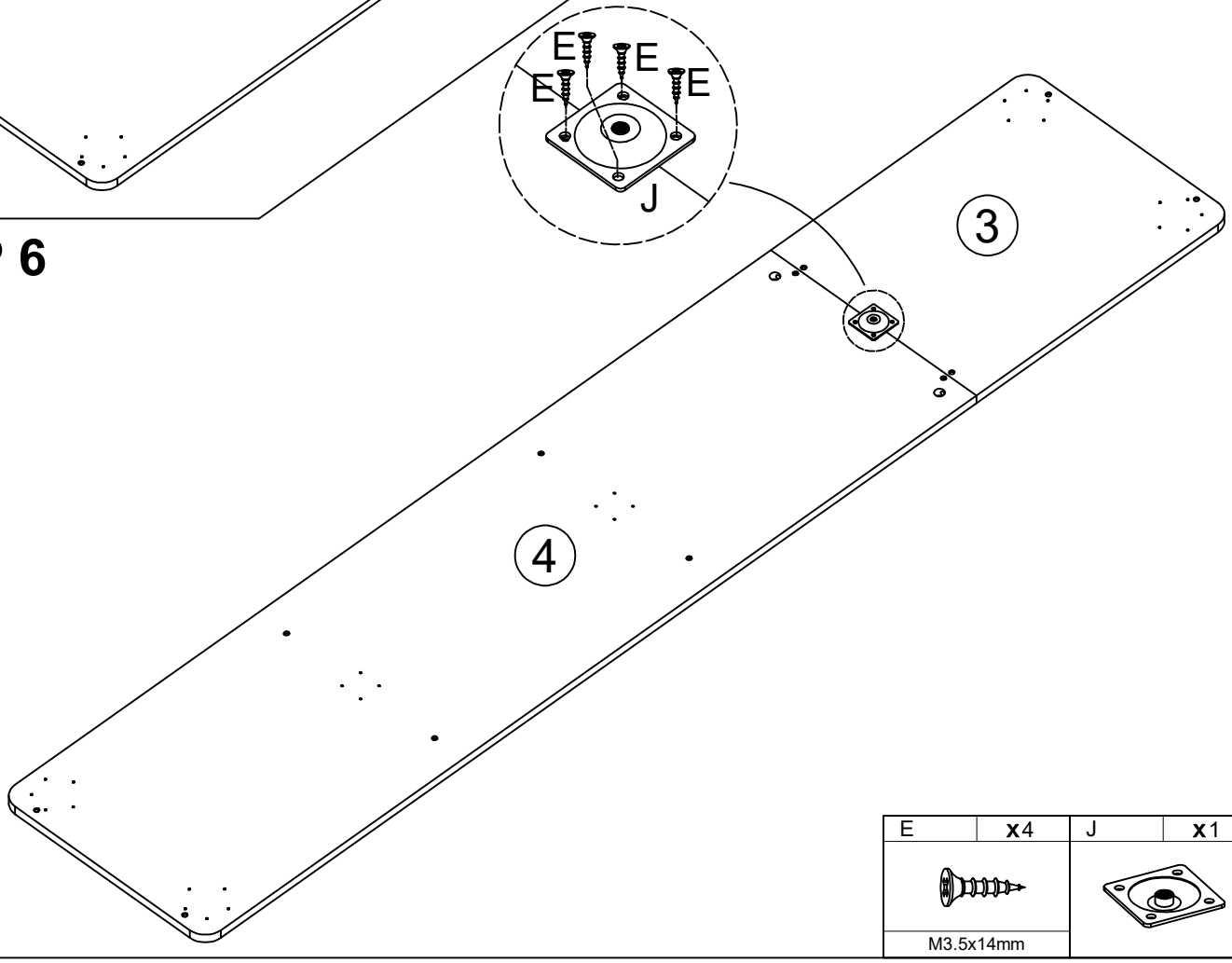

E	x4	J	x1
M3.5x14mm			

Assembly Instructions

STEP 7

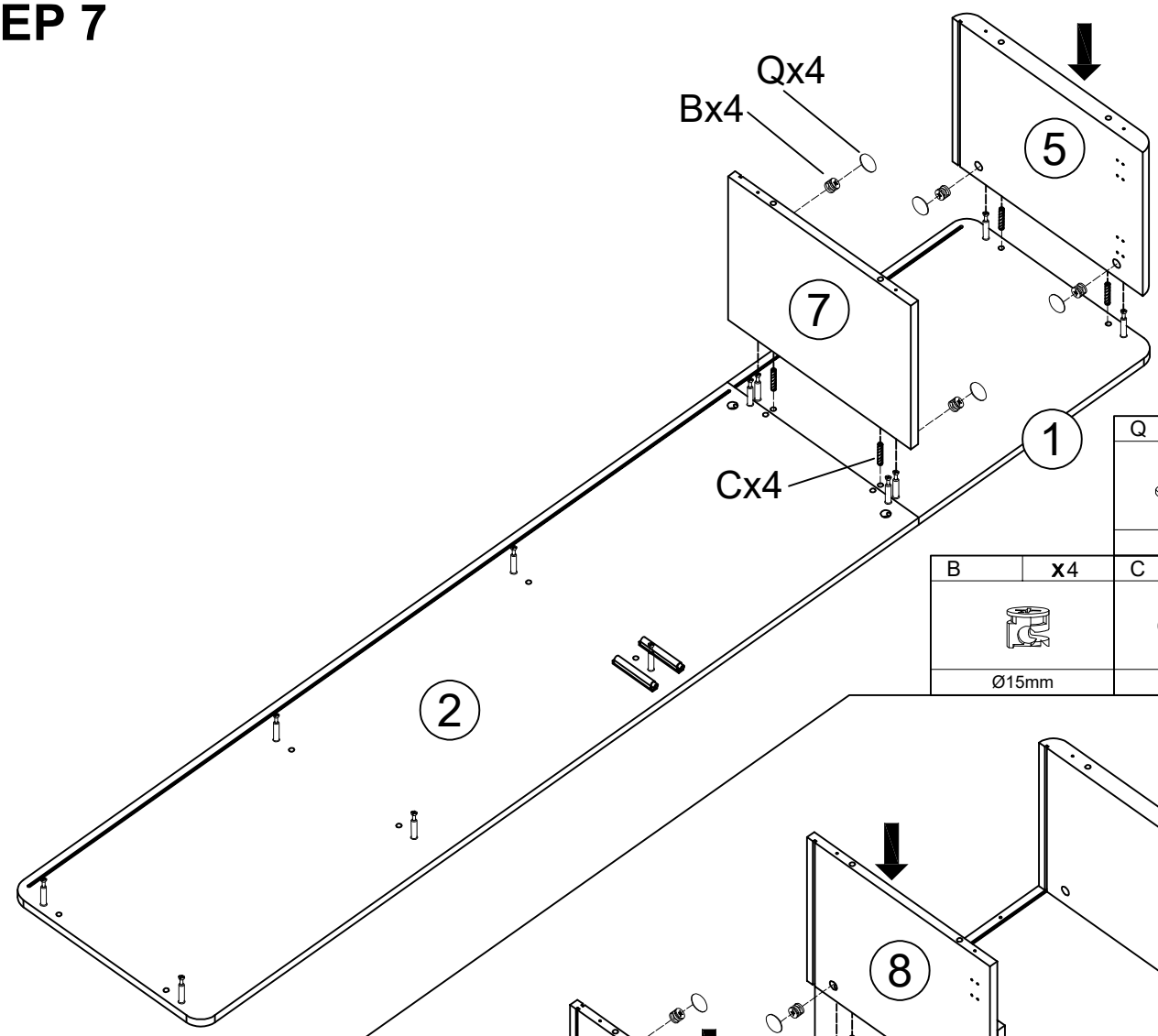

Q	x4
Ø20mm	

B	x4	C	x4
Ø15mm		Φ8x30mm	

STEP 8

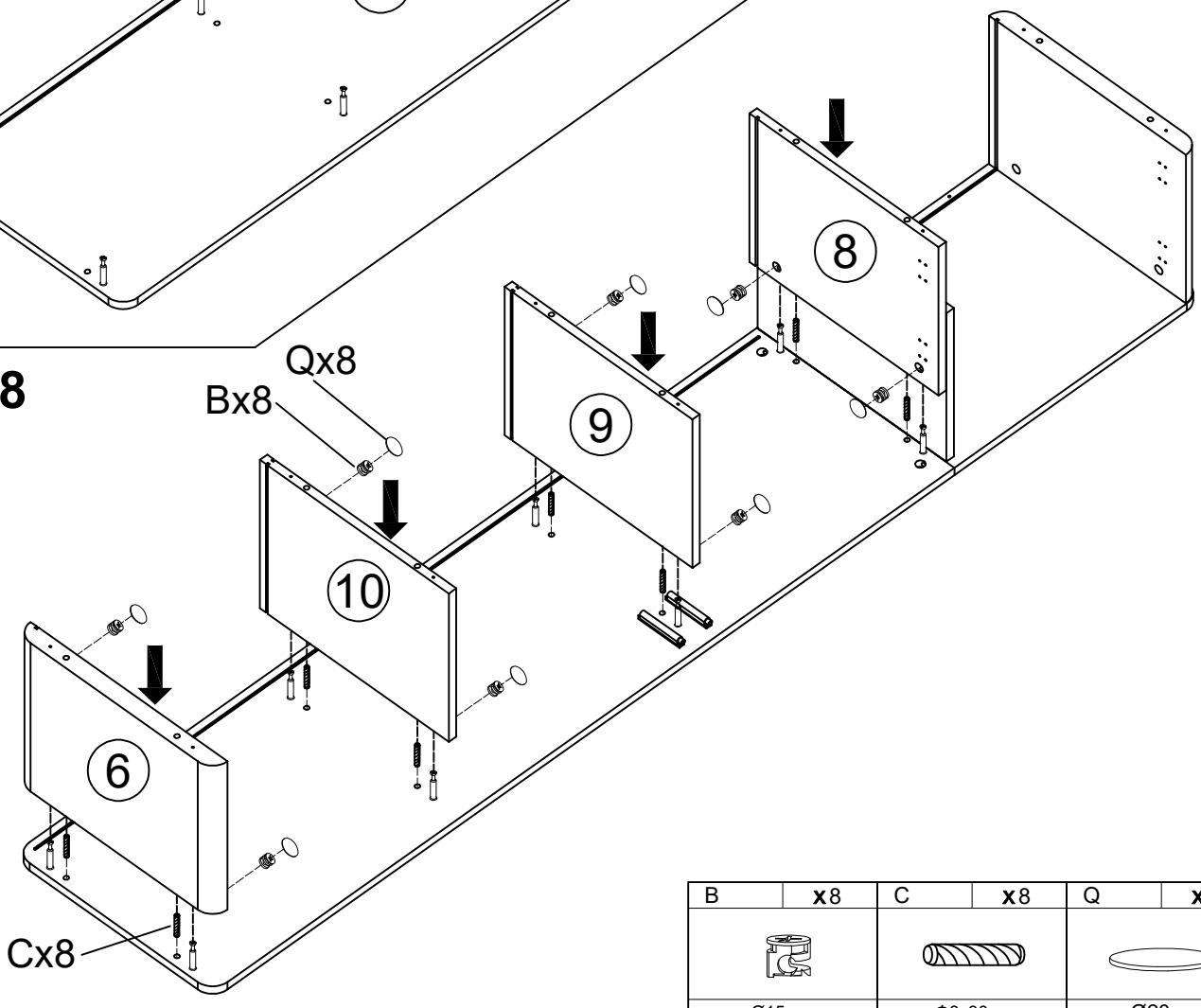

B	x8	C	x8	Q	x8
Ø15mm		Φ8x30mm		Ø20mm	

Assembly Instructions

STEP 9

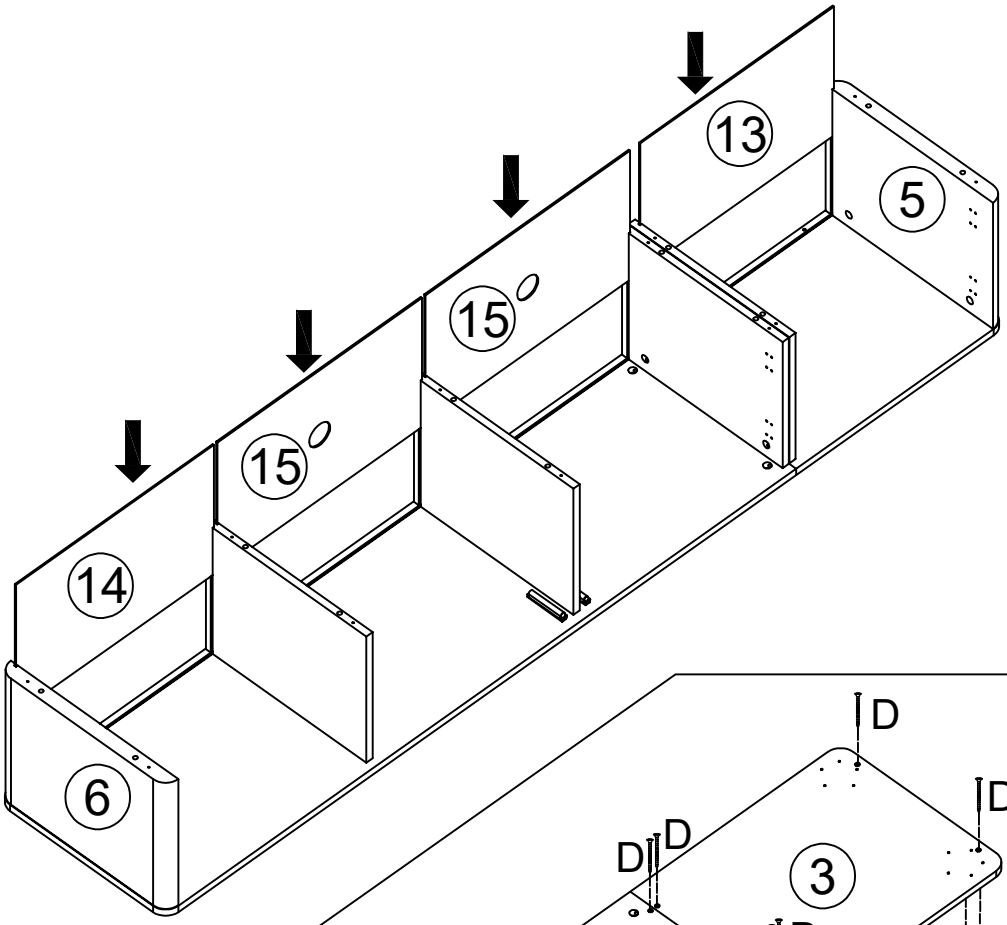

STEP 10

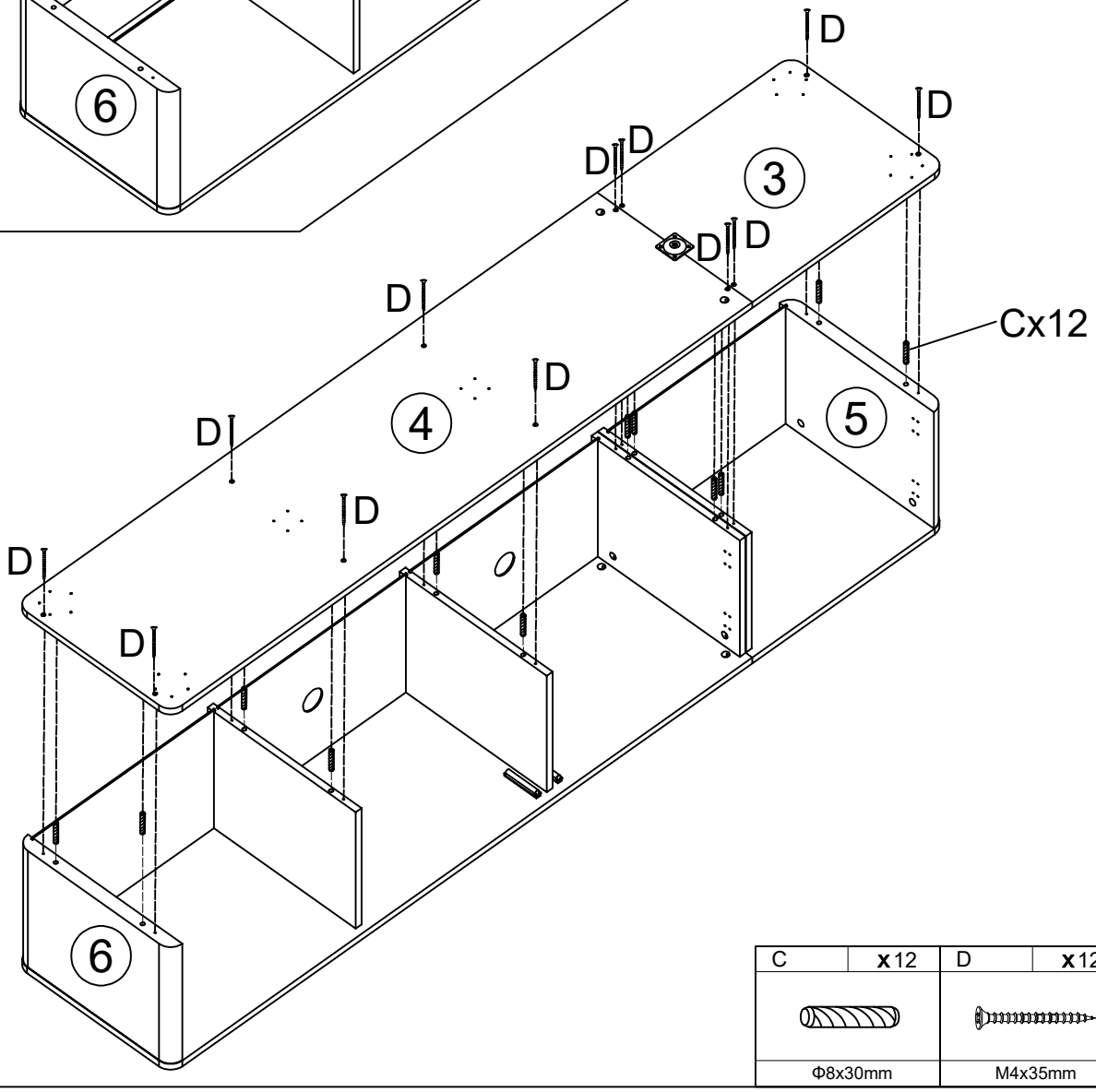

C	x12	D	x12
Φ8x30mm		M4x35mm	

Assembly Instructions

STEP 11

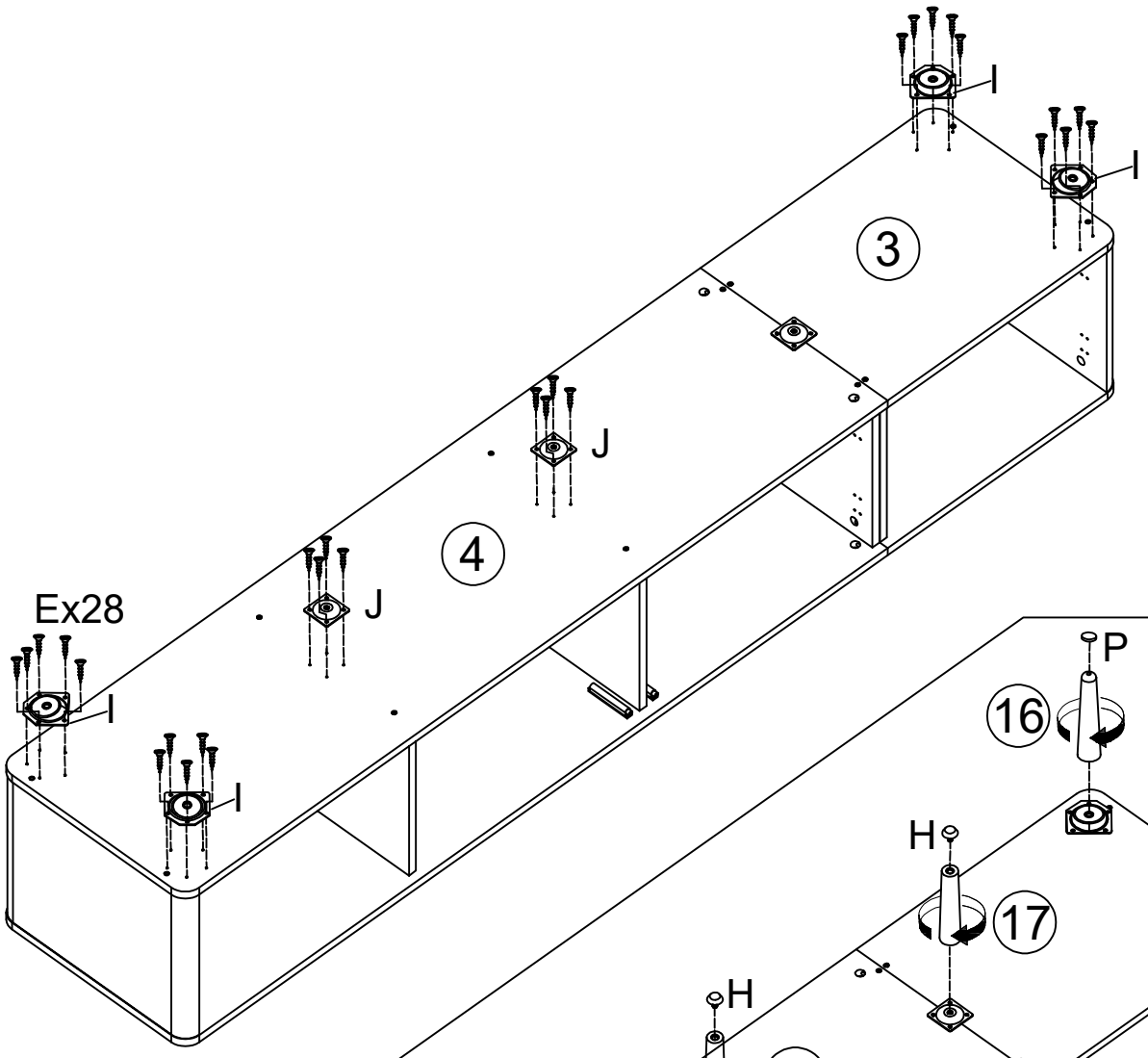

E	x28
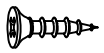	
M3.5x14mm	
I	x4
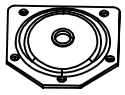	
J	x2
	

STEP 12

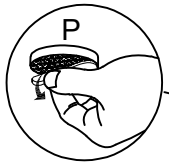

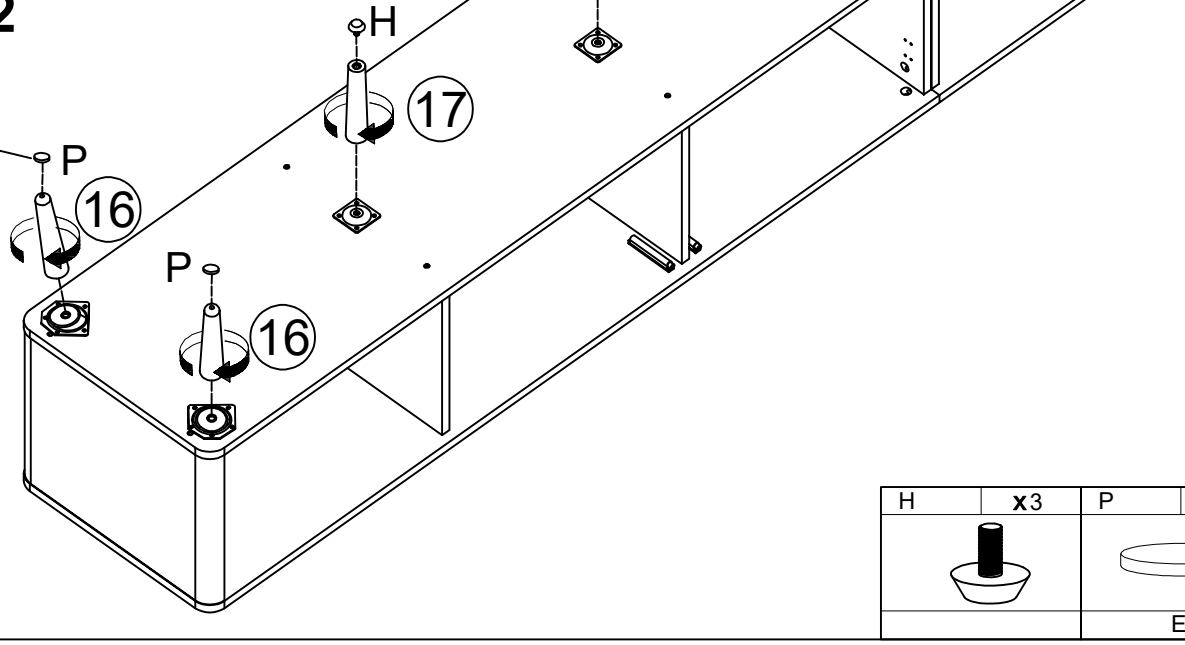

H	x3	P	x4
		EVA	

Assembly Instructions

STEP 13

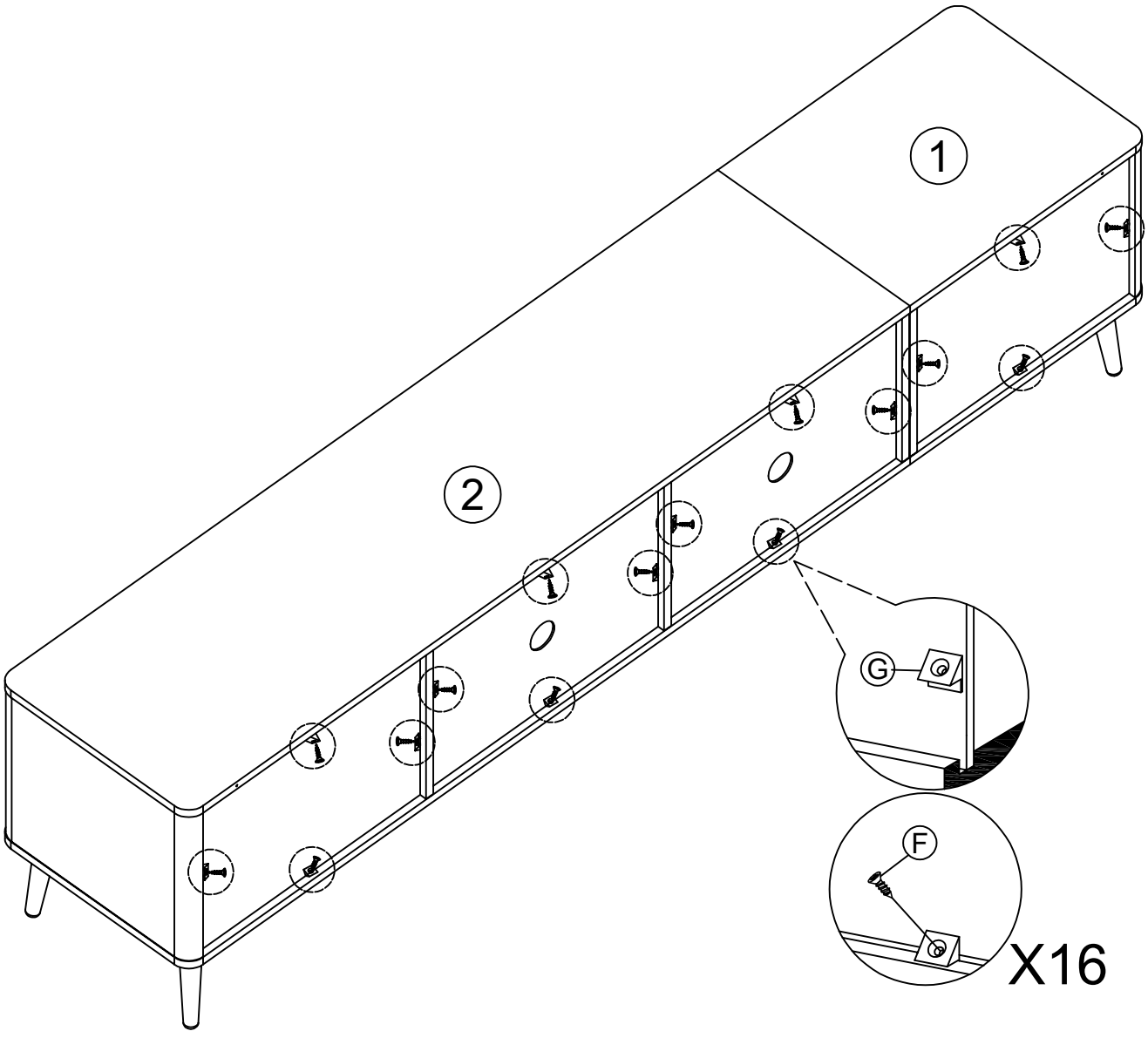

G	x16	F	x16
		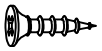	
		M3.5x14mm	

Assembly Instructions

STEP 14

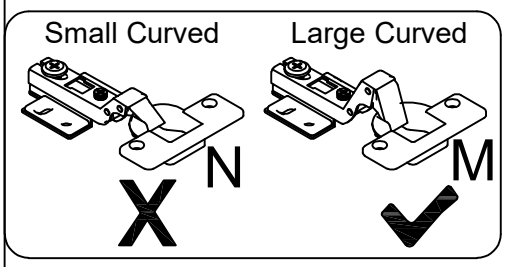

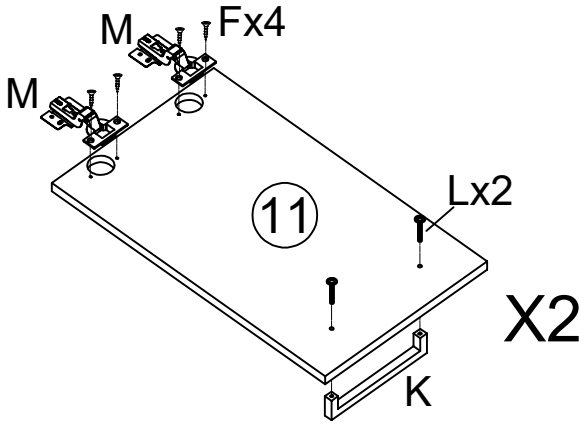

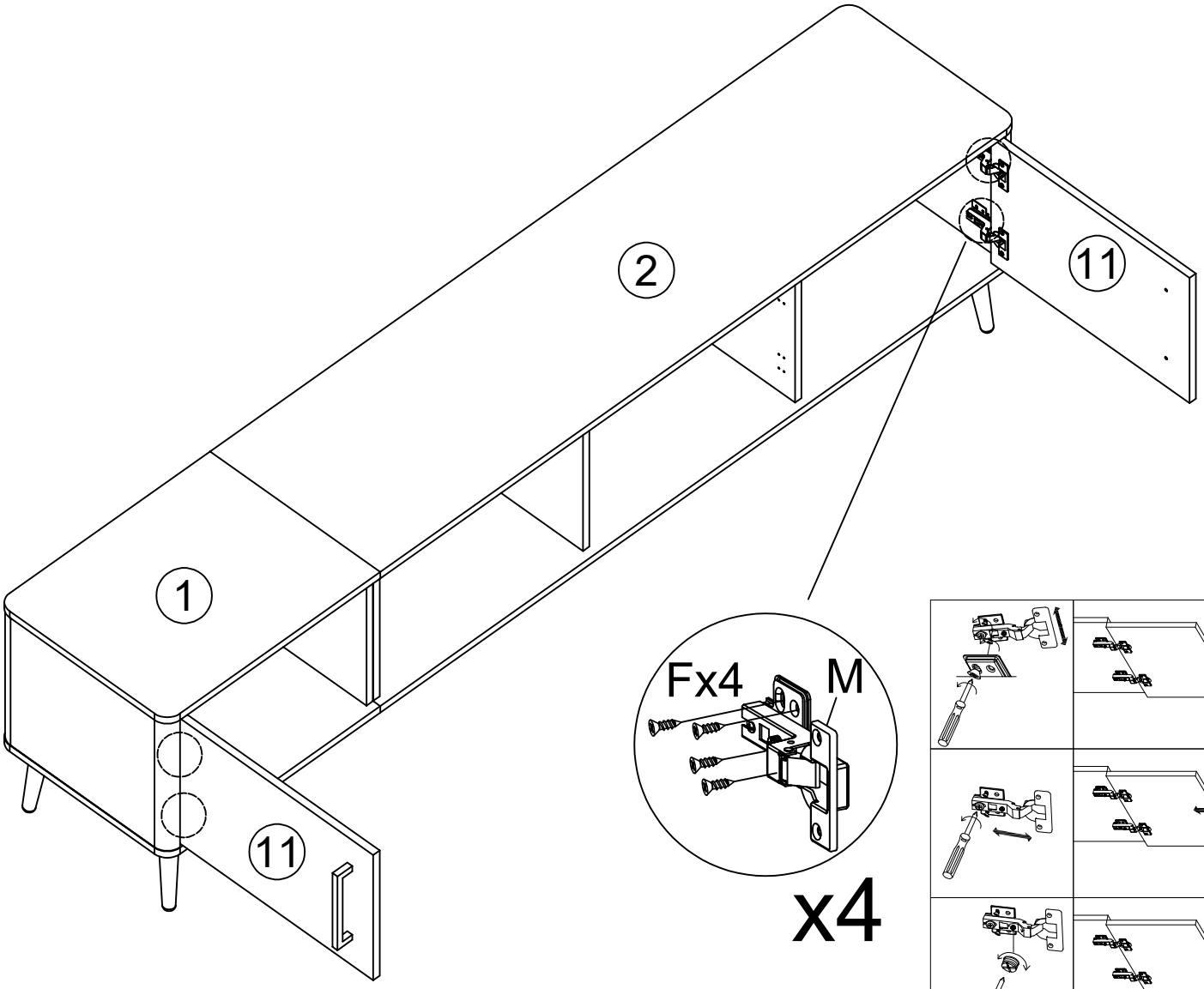

x4

K	x2	L	x4	M	x4	F	x24
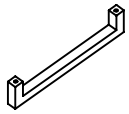		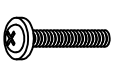 M4x25mm		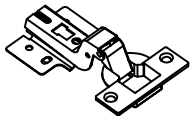		 M3.5x14mm	

Assembly Instructions

STEP 15

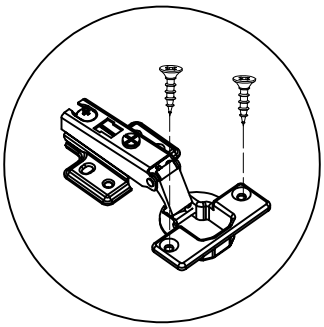

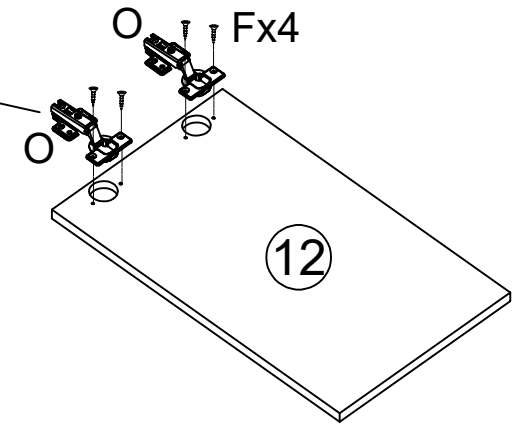

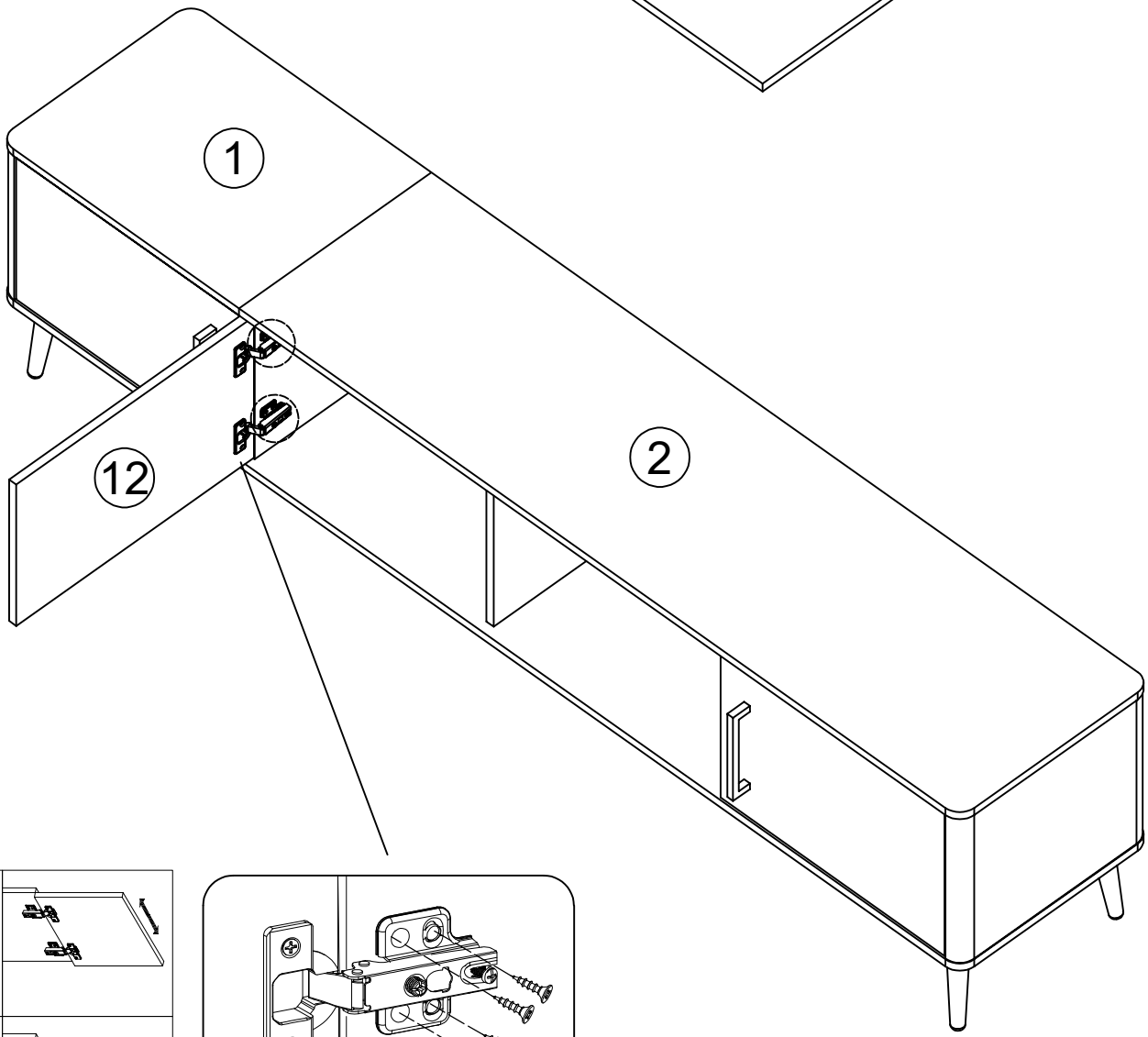

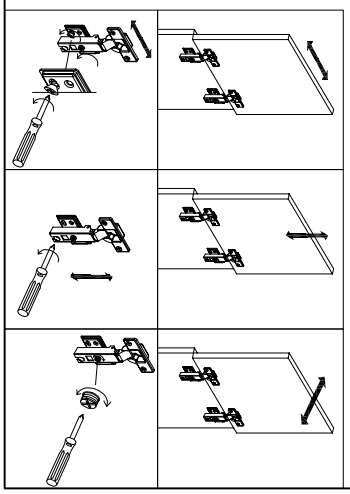

x2

O	x2	F	x12
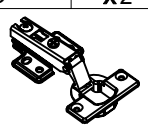			M3.5x14mm

Assembly Instructions

STEP 16

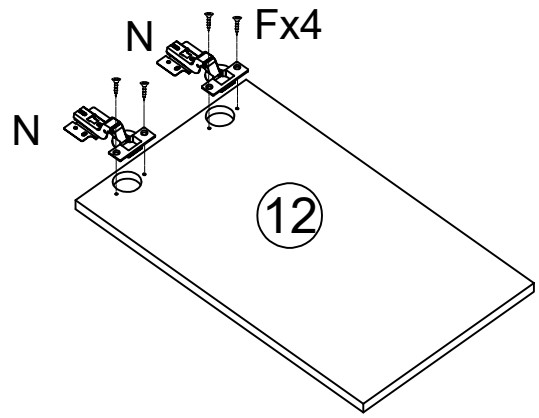

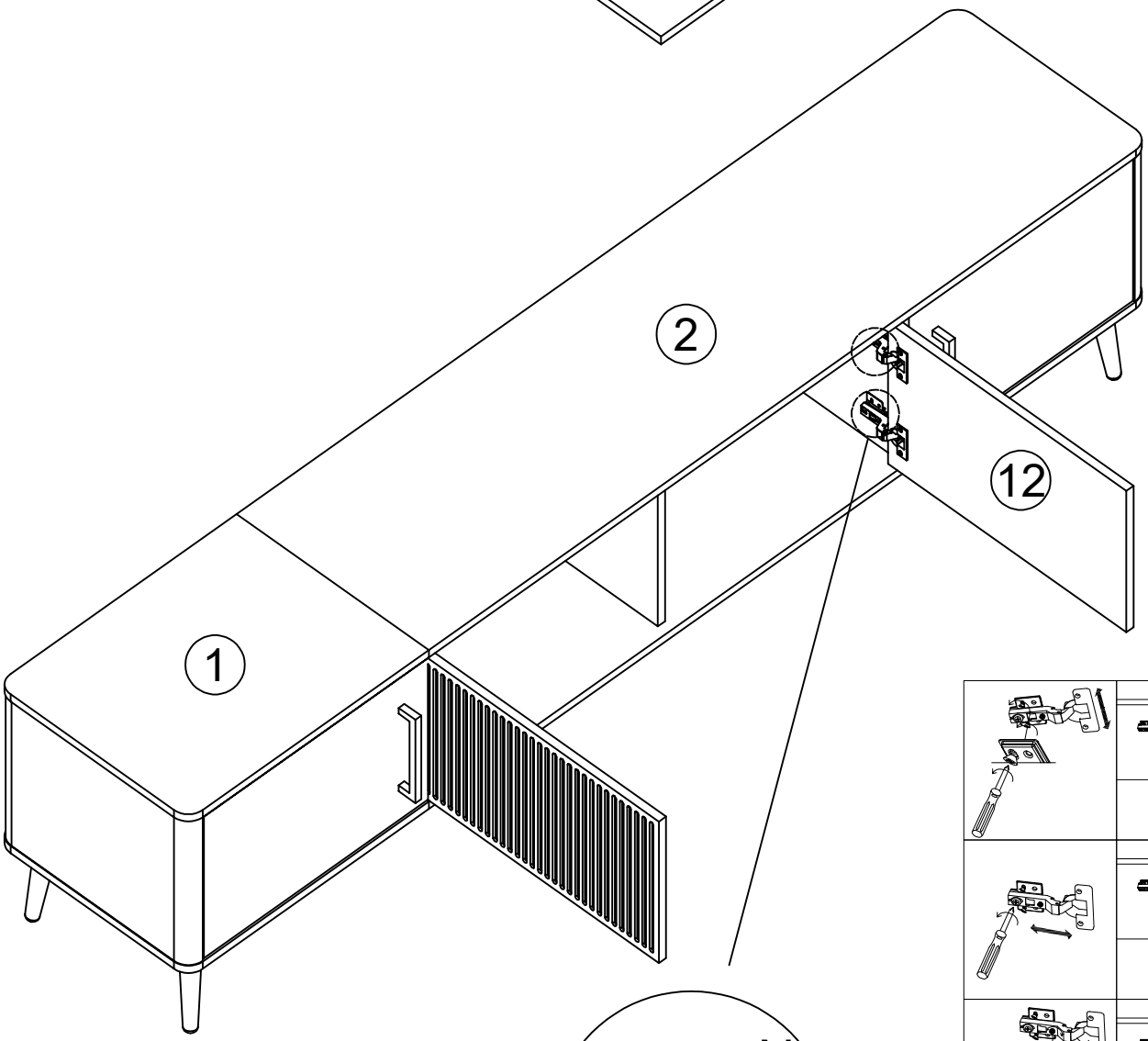

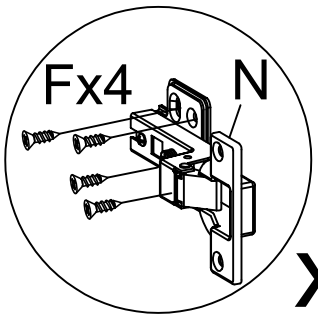

x2

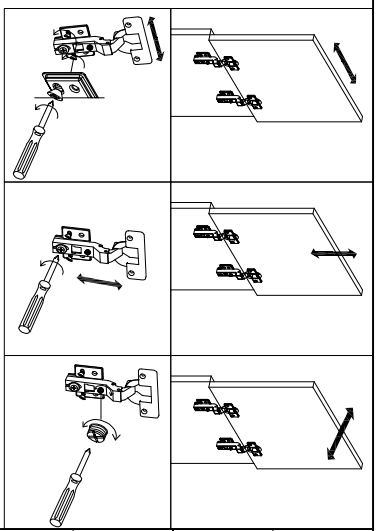

N	x2	F	x12
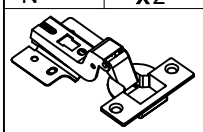		 M3.5x14mm	

Assembly Instructions

STEP 17

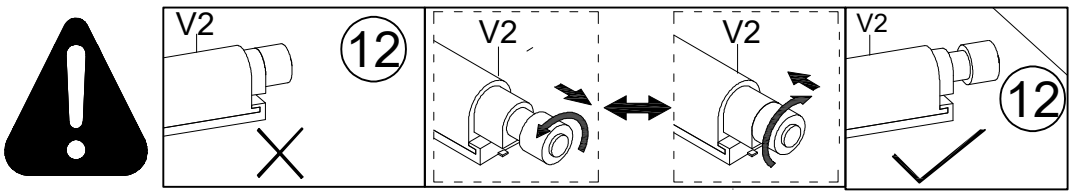

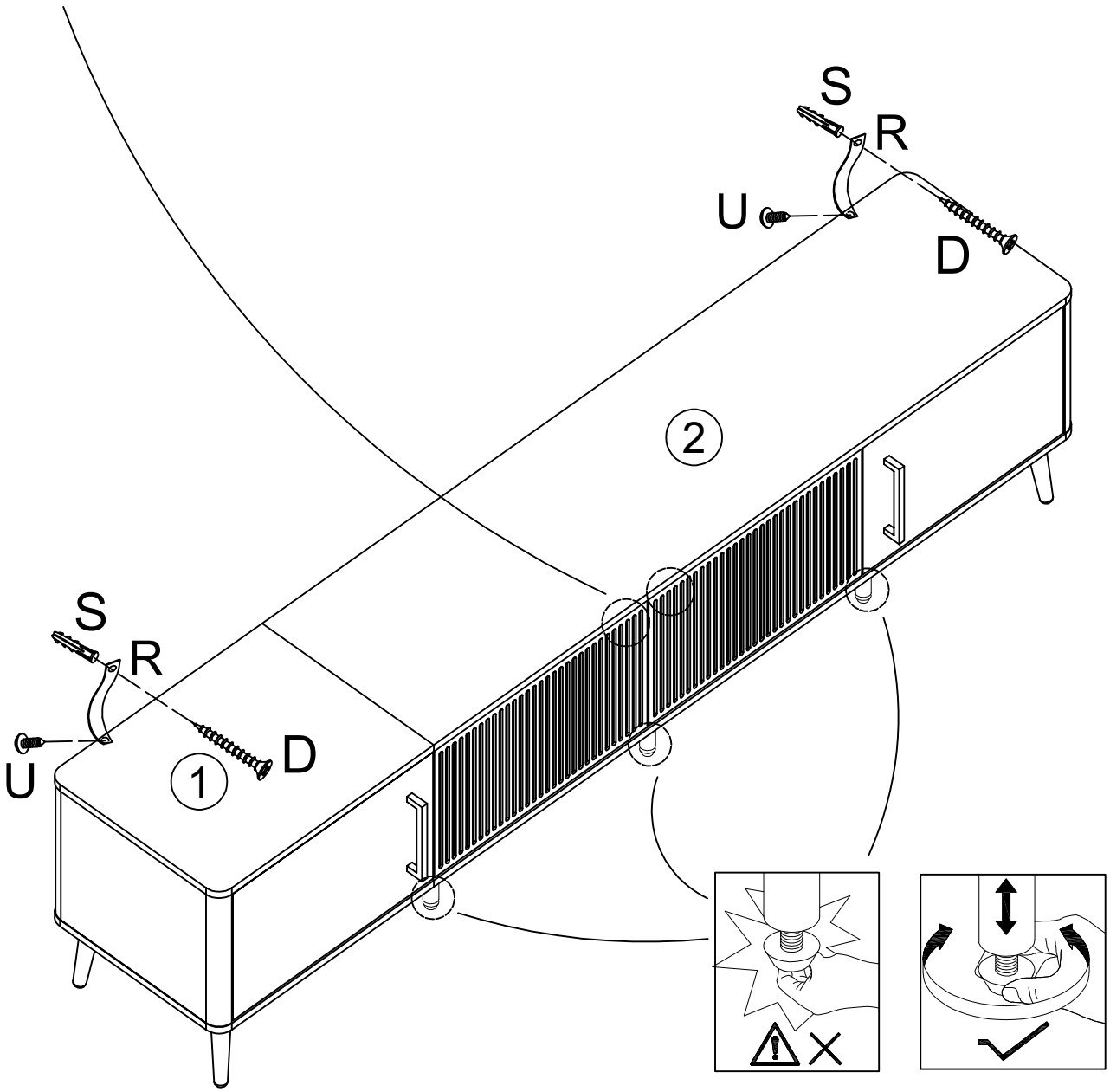

D	x2	R	x2	S	x2	U	x2
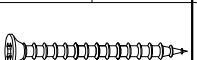				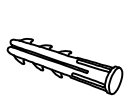		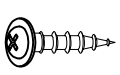	
M4x35mm						M4x14mm	