9x18M

1#		45pcs	E		40pcs	N	6x60mm	40pcs
2#		20pcs	F		16pcs	P		1pc
3#		60pcs	G		4pcs	Q		18pcs
5#		36pcs	H		40pcs	R		2pcs
A		4pcs	J		4pcs	S		72pcs
B		16pcs	K		264pcs	T		2pcs
C		2pcs	L	6x60mm	20pcs	U		10pcs
D		8pcs	M	6x30mm	72pcs	Y		2pcs
						Z		4pcs

2.

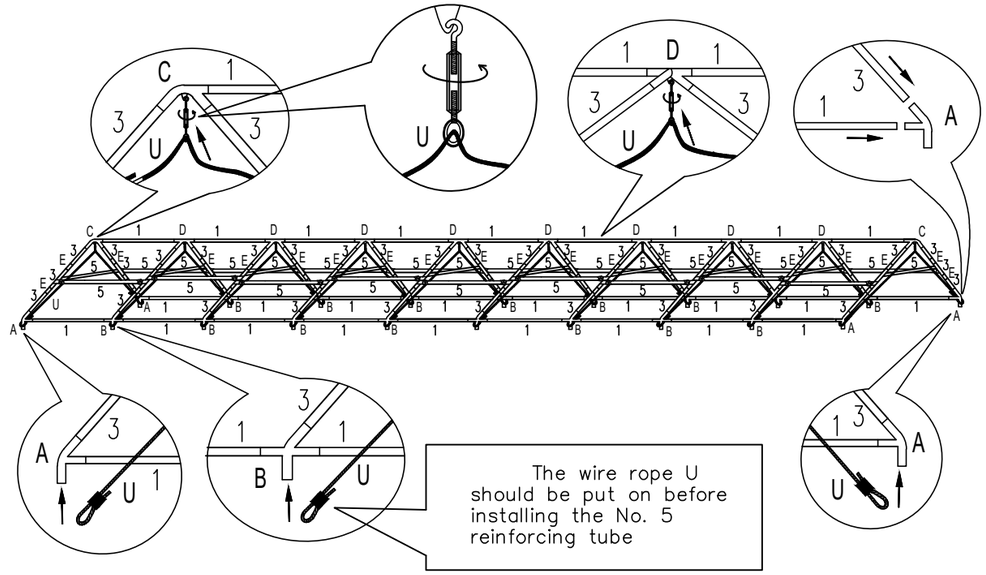

1.

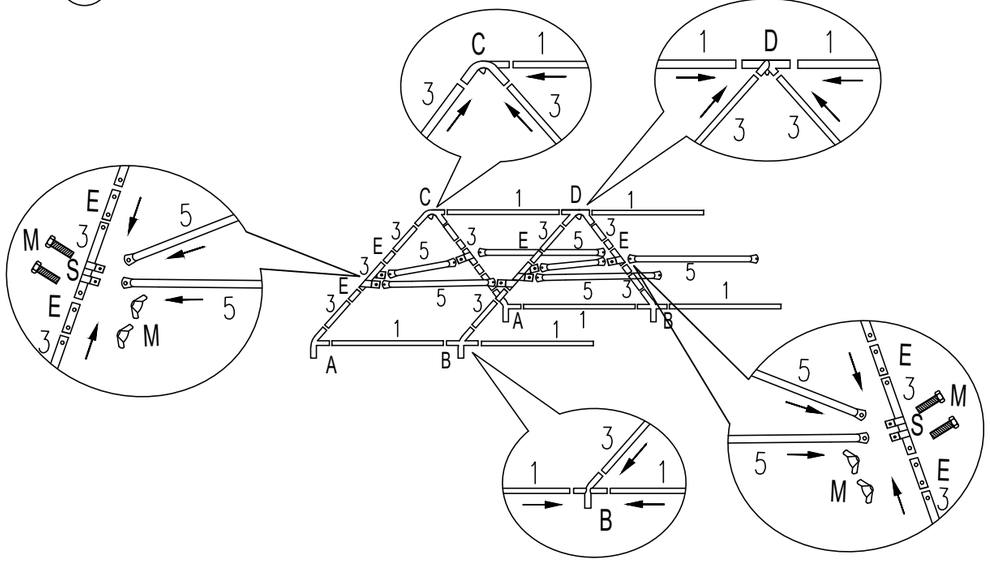

3.

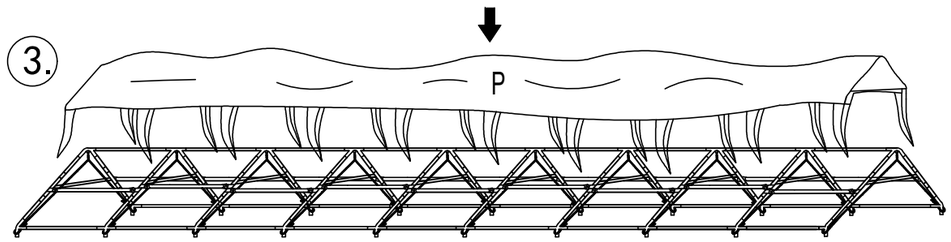

4.

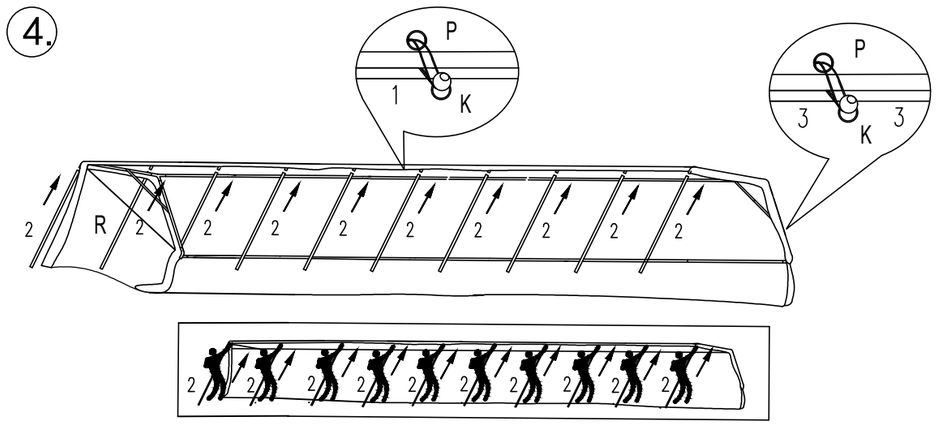

5.

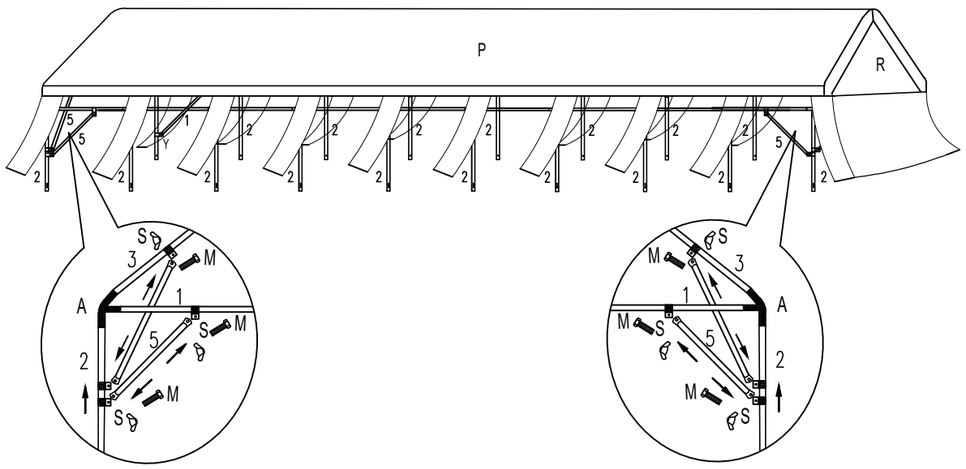

6.

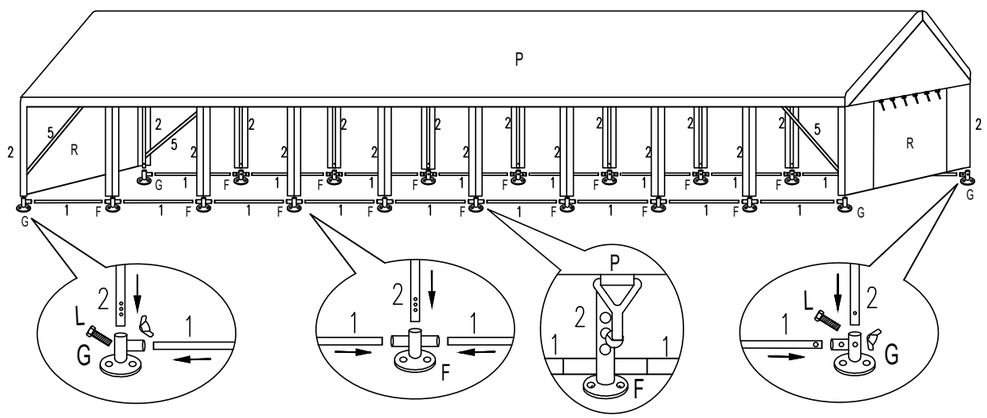

7.

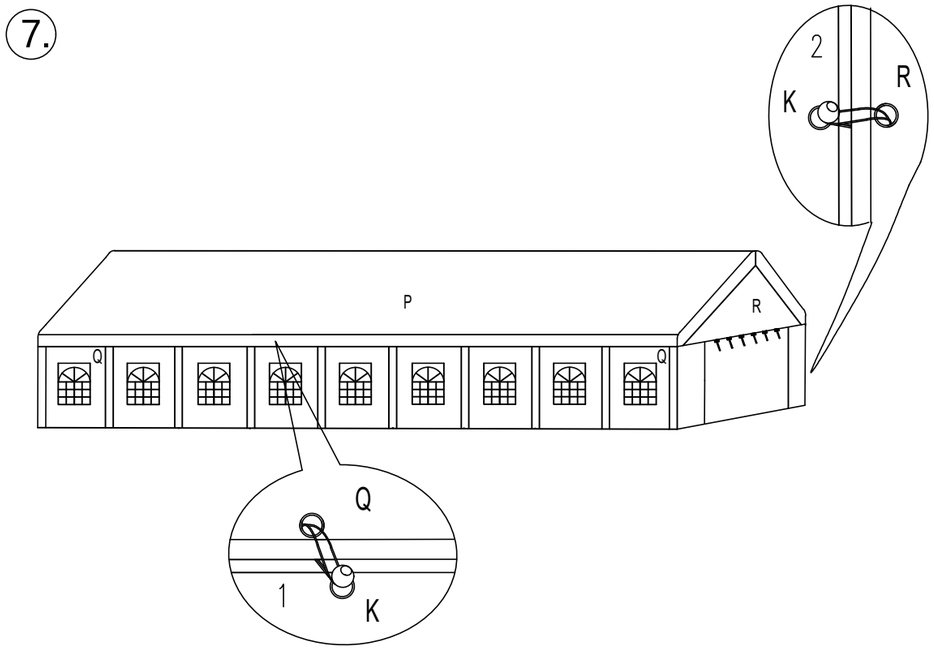

8.

