Panel bed-F/Q
Assembly Instructions

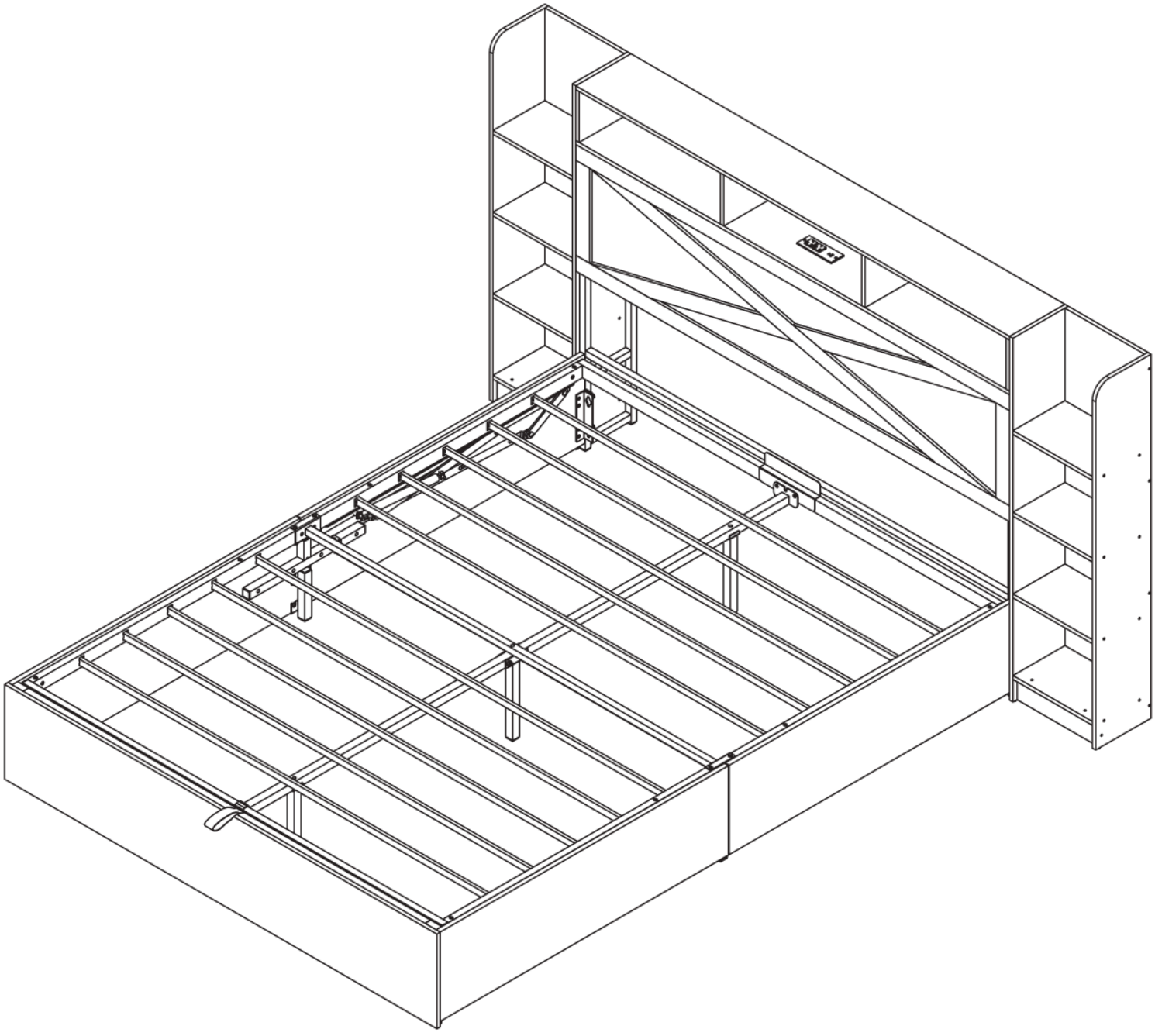

Dear Customers,

Thank you for purchasing our product. Please read this instruction manual carefully after receiving this product. It will help you assemble this product quickly, safely and correctly. You can keep this manual for future reference.

MADE IN CHINA

IMPORTANT

Please follow the instruction manuals and use a pad to protect the product during your assembly.

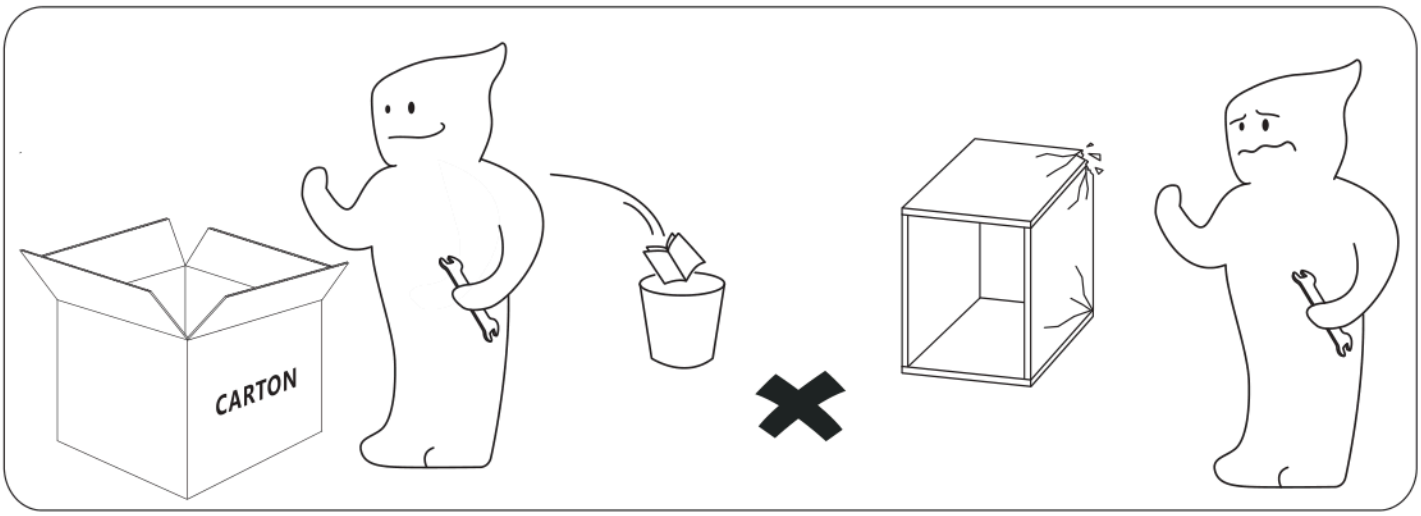

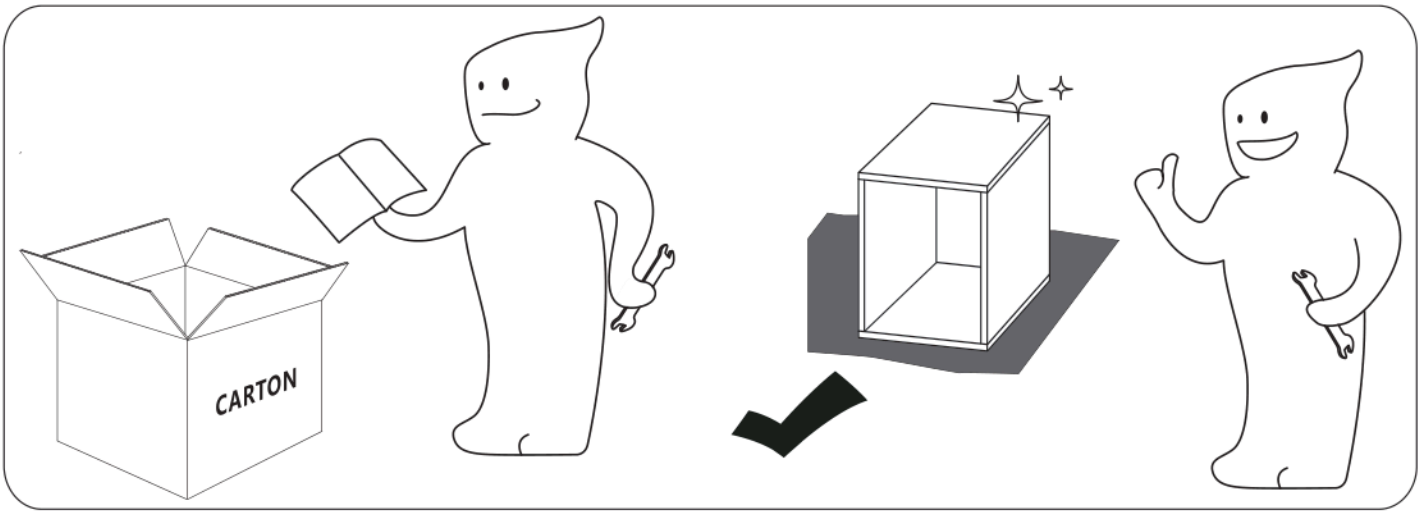

Note:
1. Should be assembled on flat ground to keep balance.
2. Before completing the installation, do not tighten the screws.

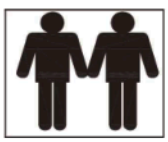

For easier and better assembly, **2** or more adults are required.

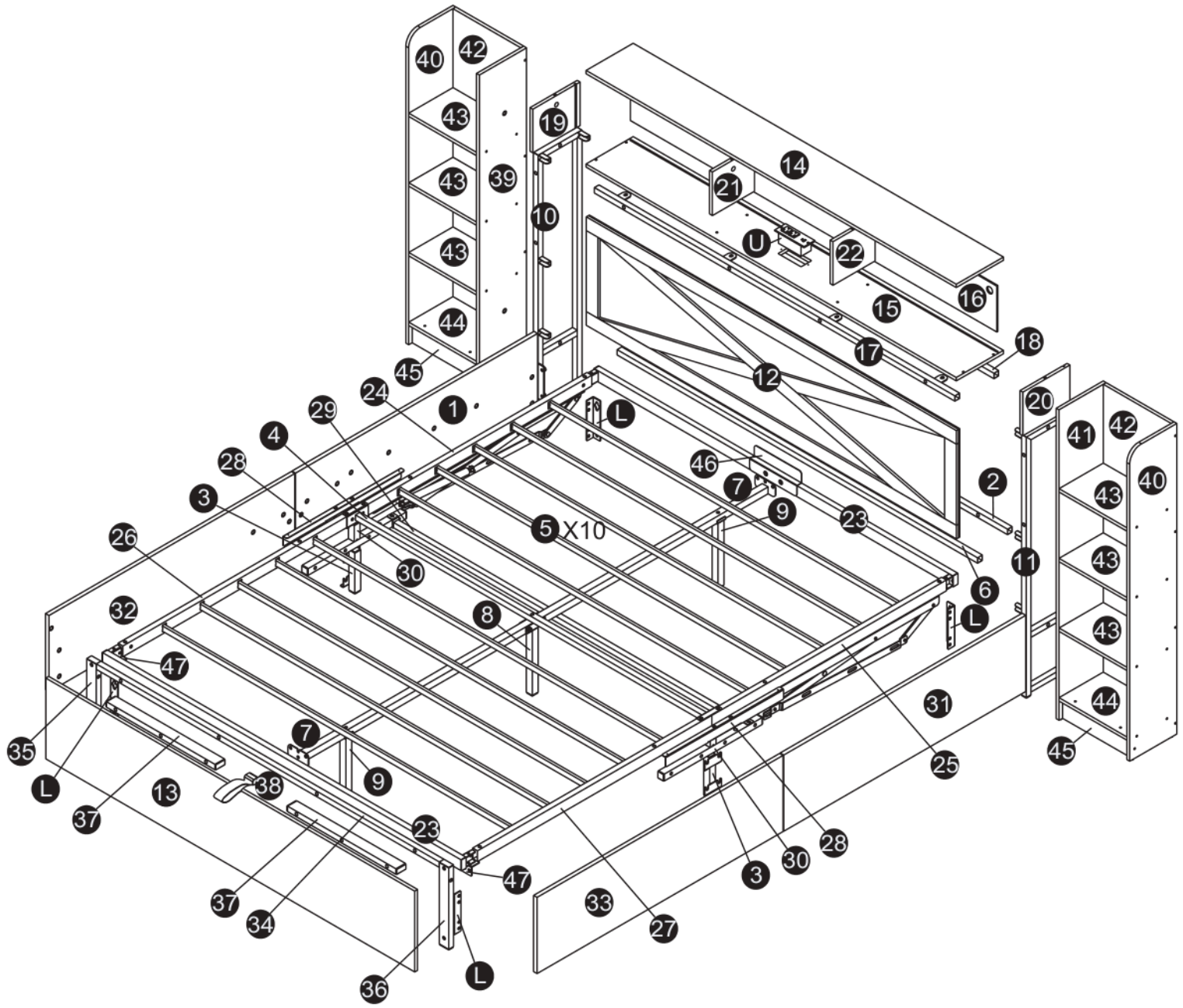
40
42
43
43
43
44
45
39
19
10
14
21
U
22
16
15
17
18
12
24
1
29
4
28
3
26
32
47
35
L
37
13
38
7
9
23
47
37
34
36
L
5 X10
30
8
46
7
9
23
L
2
6
L
11
20
41
42
40
43
43
43
44
45
31
25
28
30
3
33
27

The box 1

1 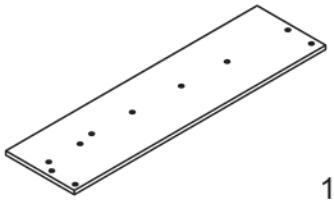 1PC	2 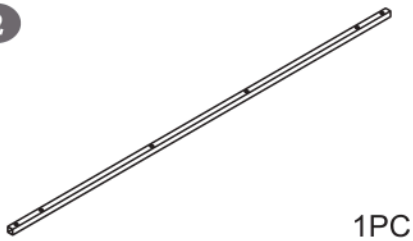 1PC	3 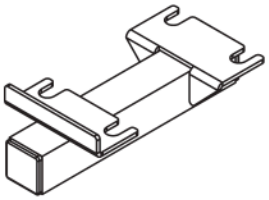 2PCS
4 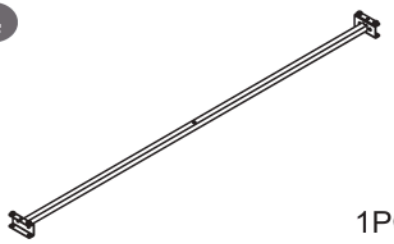 1PC	5 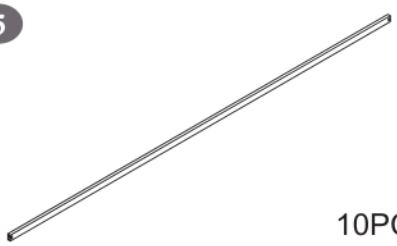 10PCS	6 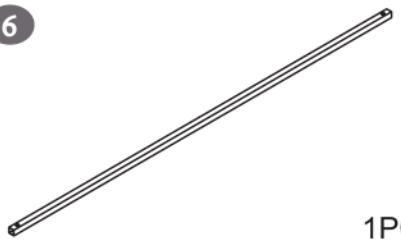 1PC
7 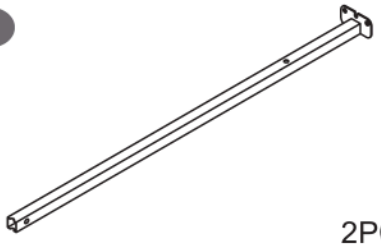 2PCS	8 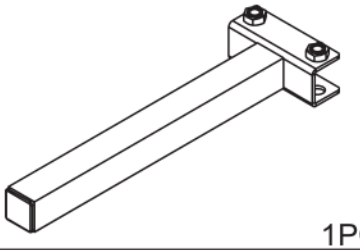 1PC	9 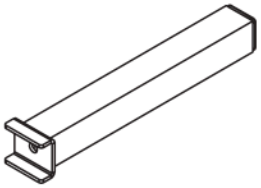 2PCS
10 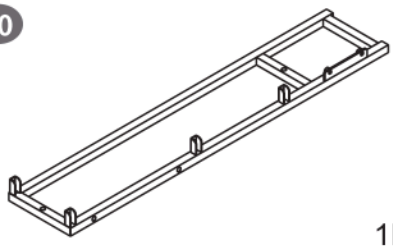 1PC	11 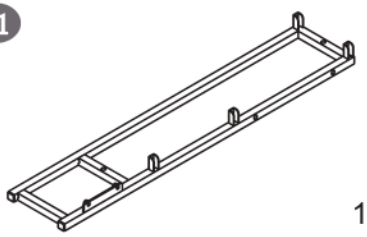 1PC	12 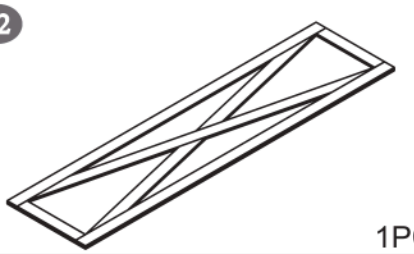 1PC
13 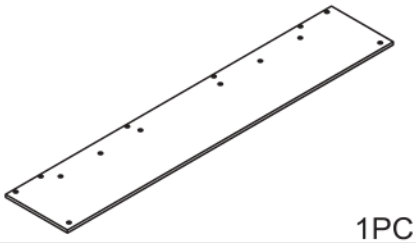 1PC	14 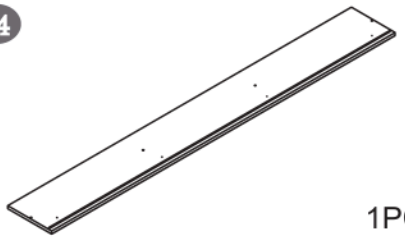 1PC	15 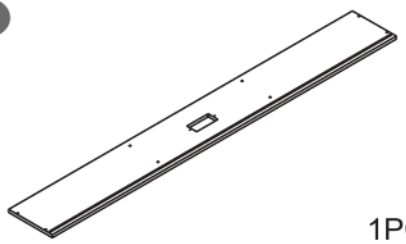 1PC
16 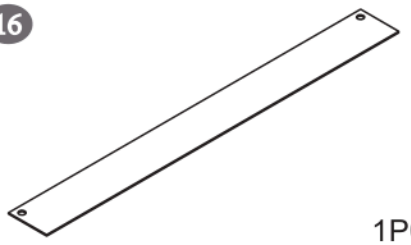 1PC	17 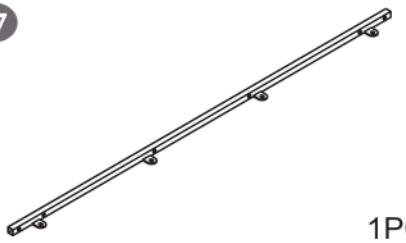 1PC	18 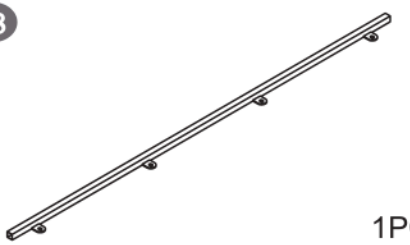 1PC
19 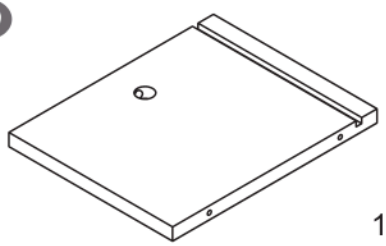 1PC	20 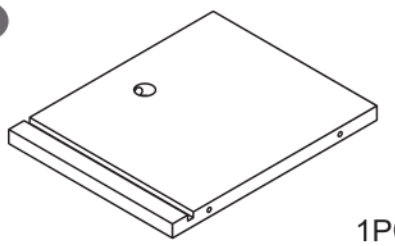 1PC	21 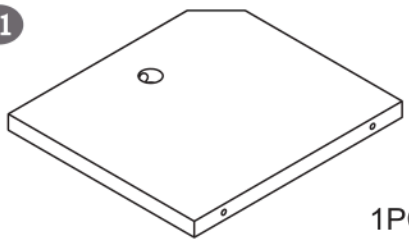 1PC

The box 1 continued

22 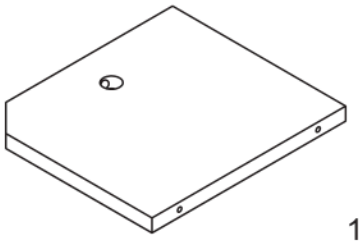 1PC	23 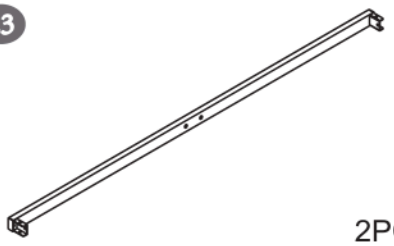 2PCS	28 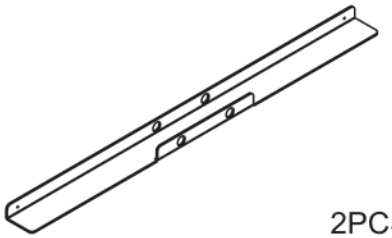 2PCS
29 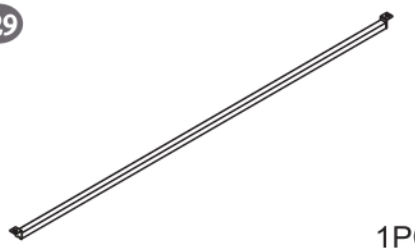 1PC	30 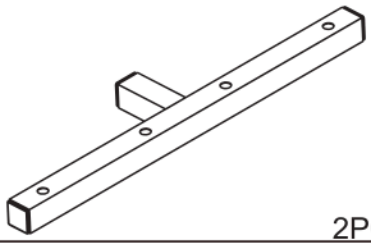 2PCS	31 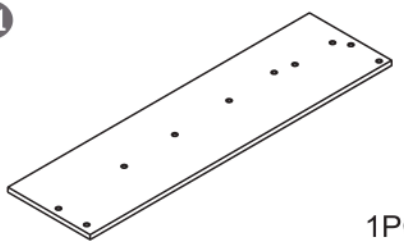 1PC
32 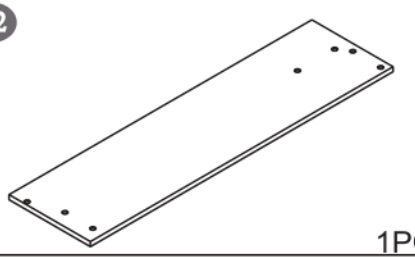 1PC	33 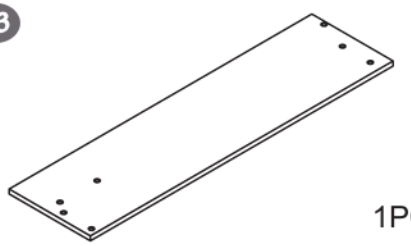 1PC	34 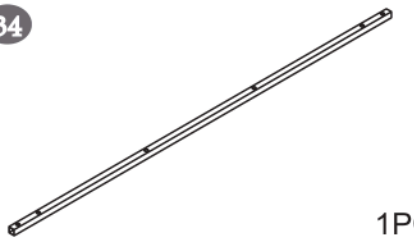 1PC
35 Nut 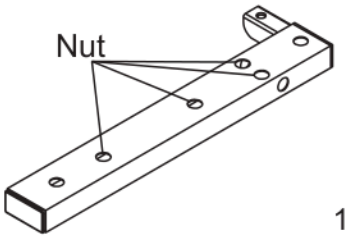 1PC	36 Nut 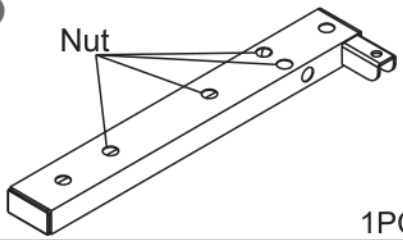 1PC	37 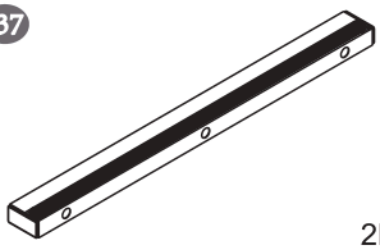 2PCS
38  1PC	42 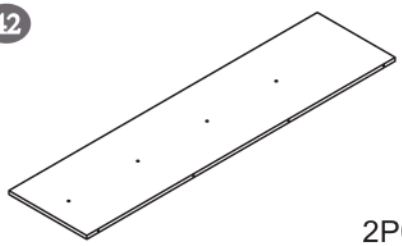 2PCS	43 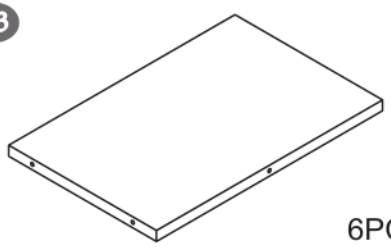 6PCS
44 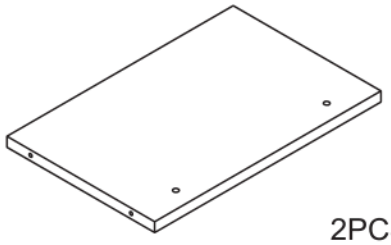 2PCS	45 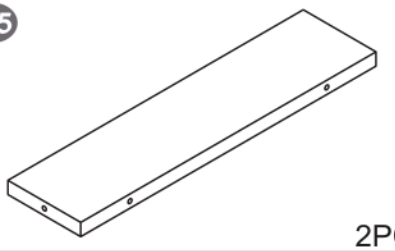 2PCS	46 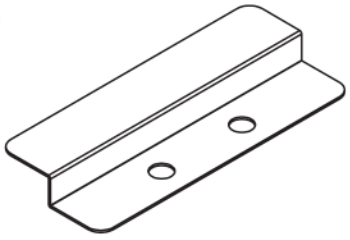 1PC
47 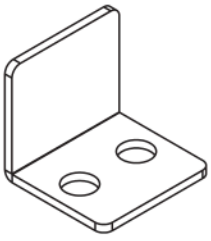 2PCS	48 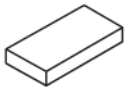 3PCS	L 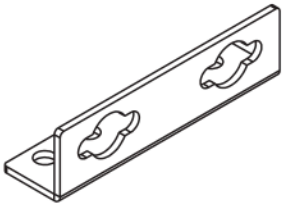 4PCS

The box 1 continued

U

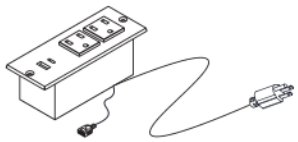

1PC

K



1PC

The list of vacuum-formed packages in Box 1

A  M8x12 68PCS	B  M8x18 Colored Zinc 12PCS	C  M8x28 24PCS
D  M8x35 12PCS	E  M8x50 Colored Zinc 8PCS	F  M8x55 5PCS
G  M5x40 72PCS	H 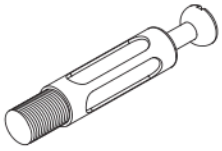 φ7x40 4PCS	I  φ15x9.5 4PCS
J  4PCS	M  ST4.2x12 2PCS	N 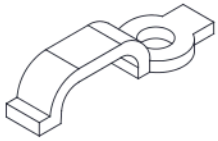 4PCS
O  ST3.2x12 4PCS	P 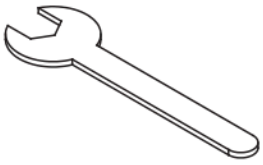 1PC	Q 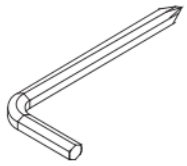 M8 1PC
R 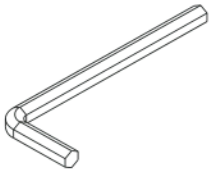 M8 1PC	S 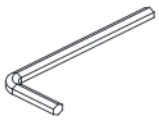 M5 1PC	

Do not tighten the screws unless the installation is done.Make sure all bolts are tightly screwed before you use it.

The box 2

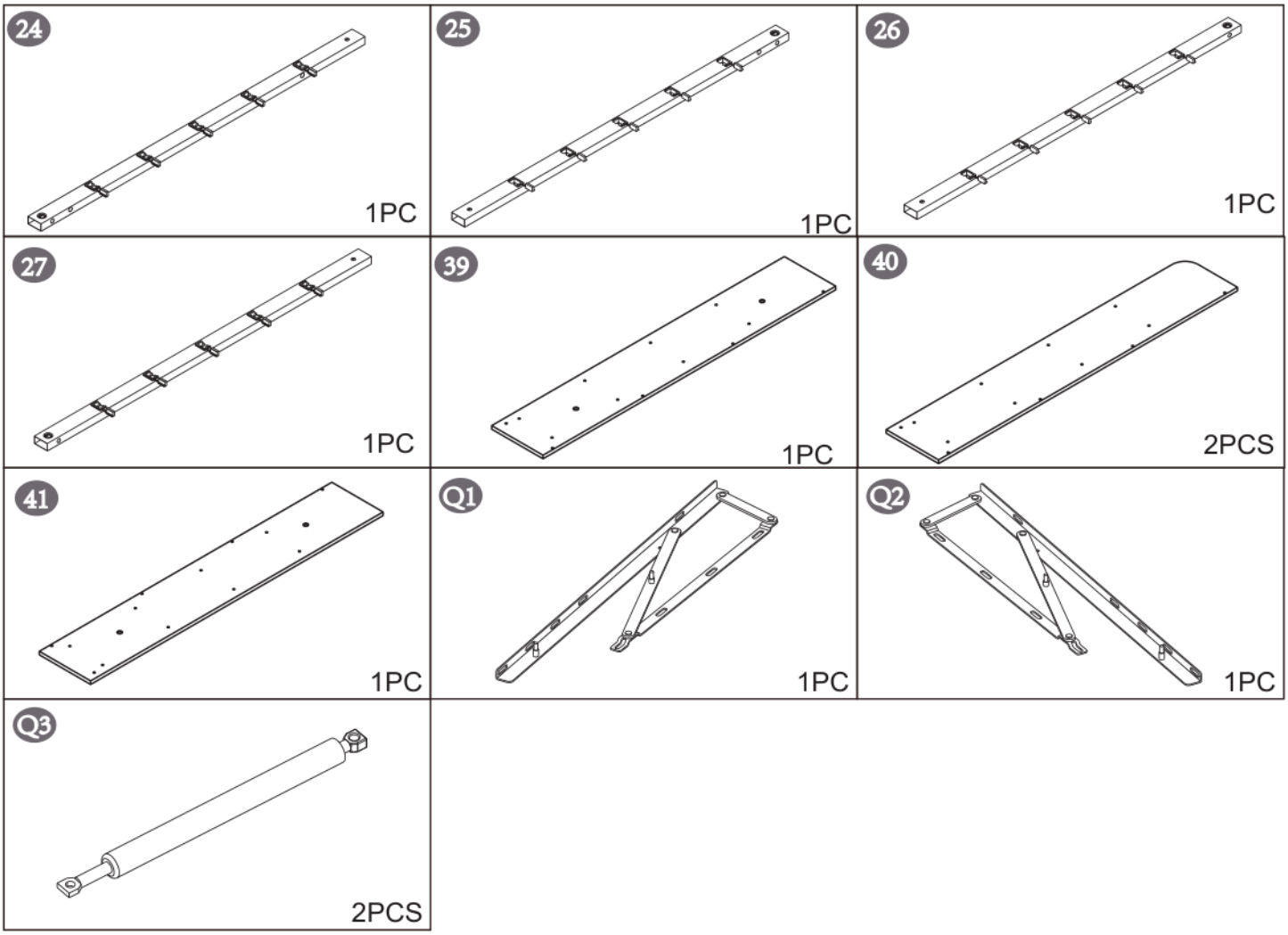
24
1PC
25
1PC
26
1PC
27
1PC
39
1PC
40
2PCS
41
1PC
Q1
1PC
Q2
1PC
Q3
2PCS

1

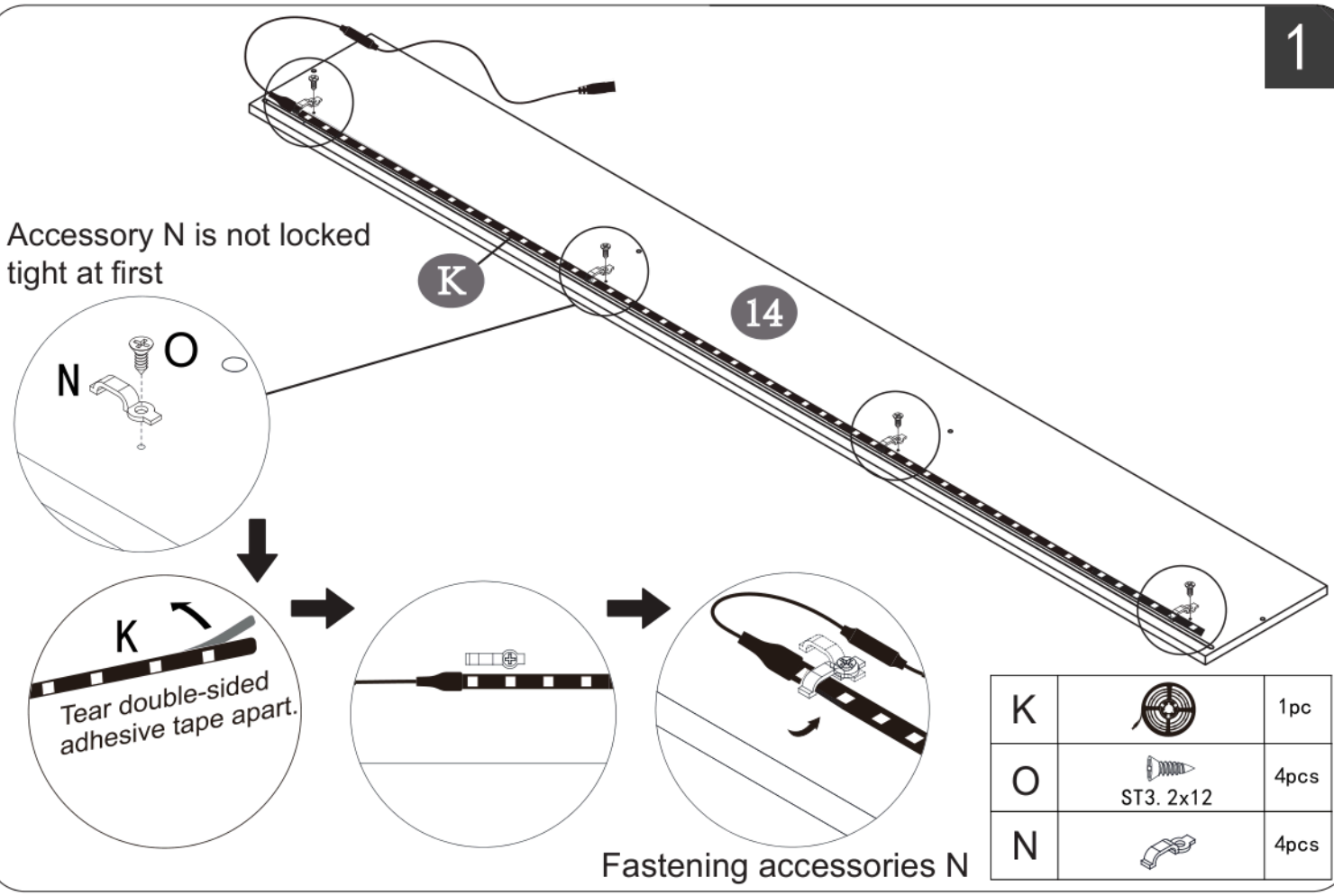

K		1pc
O	ST3. 2x12	4pcs
N		4pcs

2

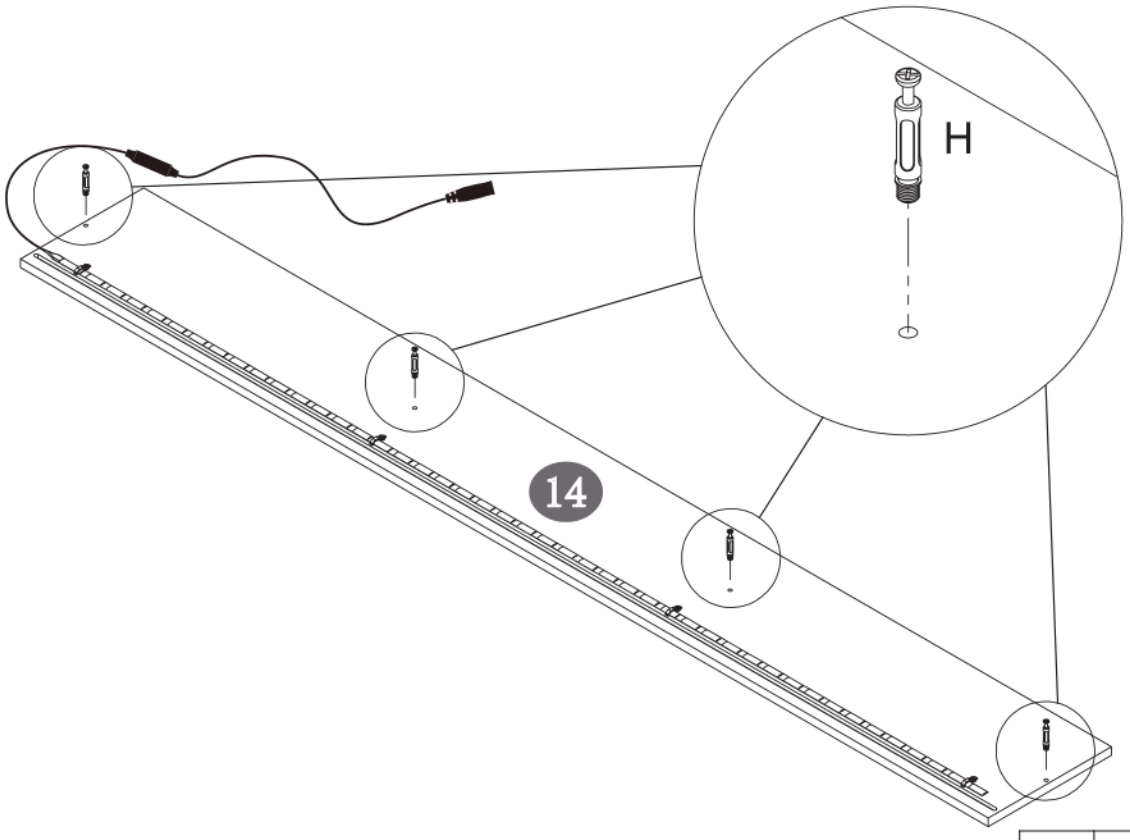

H	φ7x40	4pcs

3

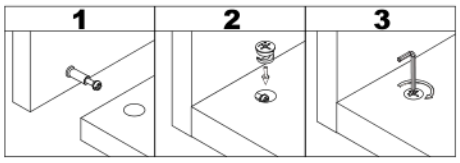

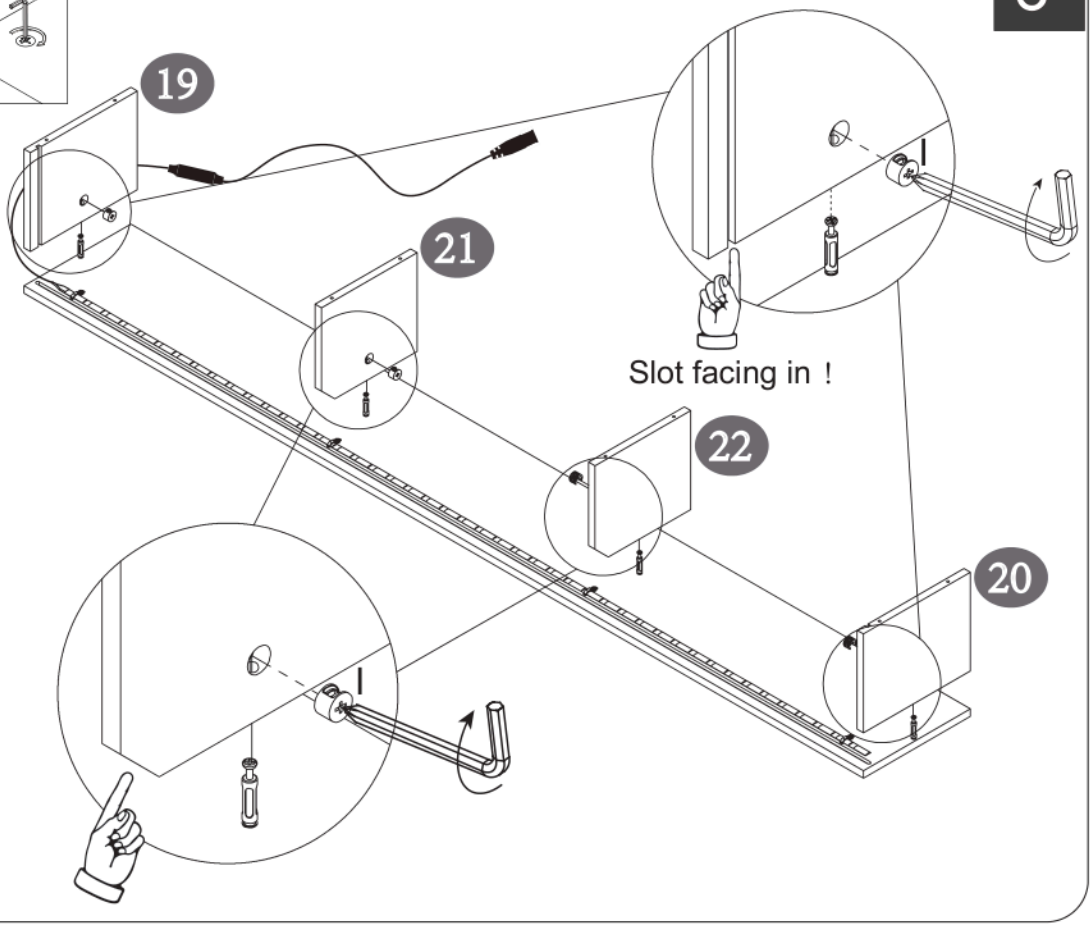

I	φ15x9.5	4 pcs

4

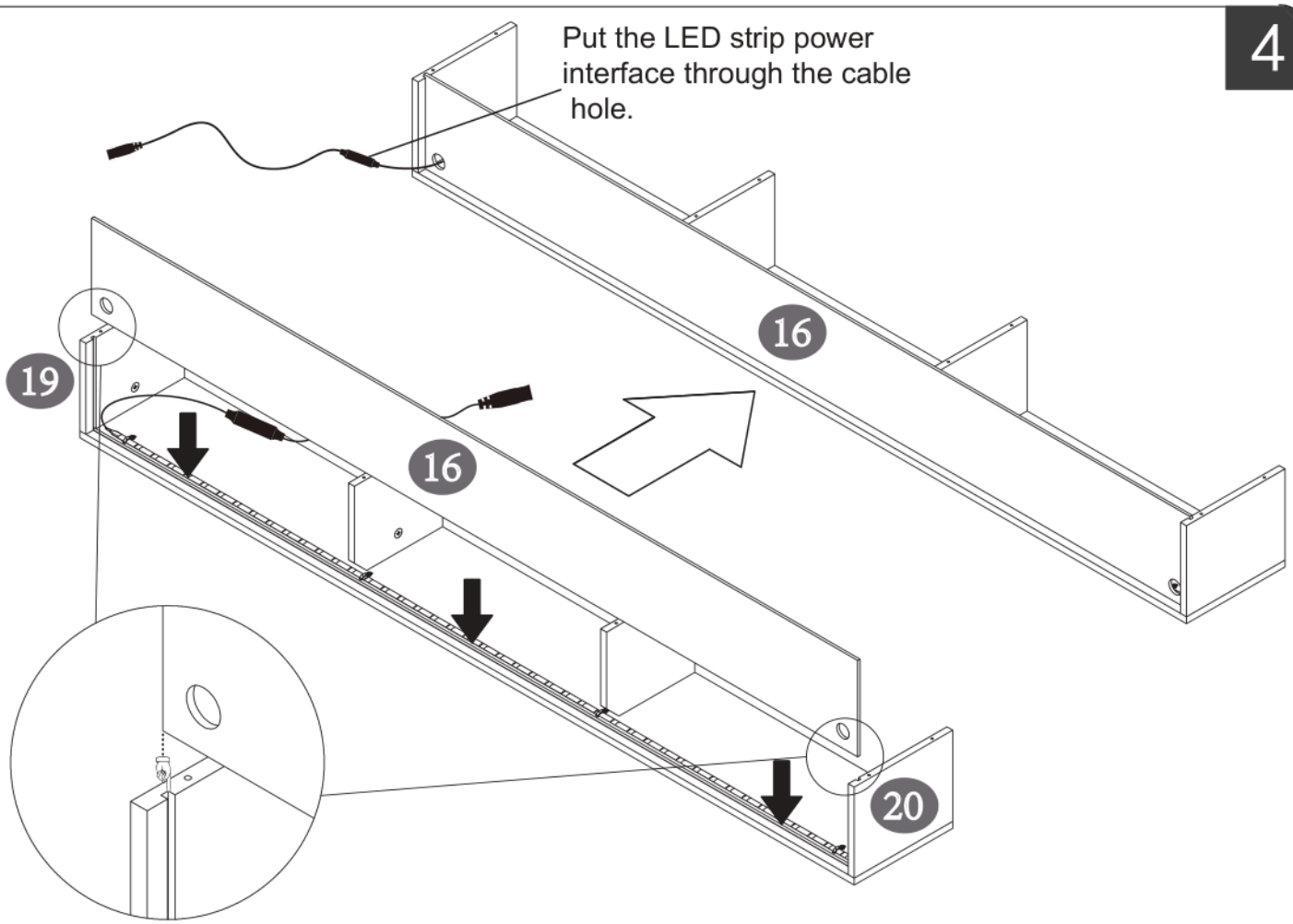

5

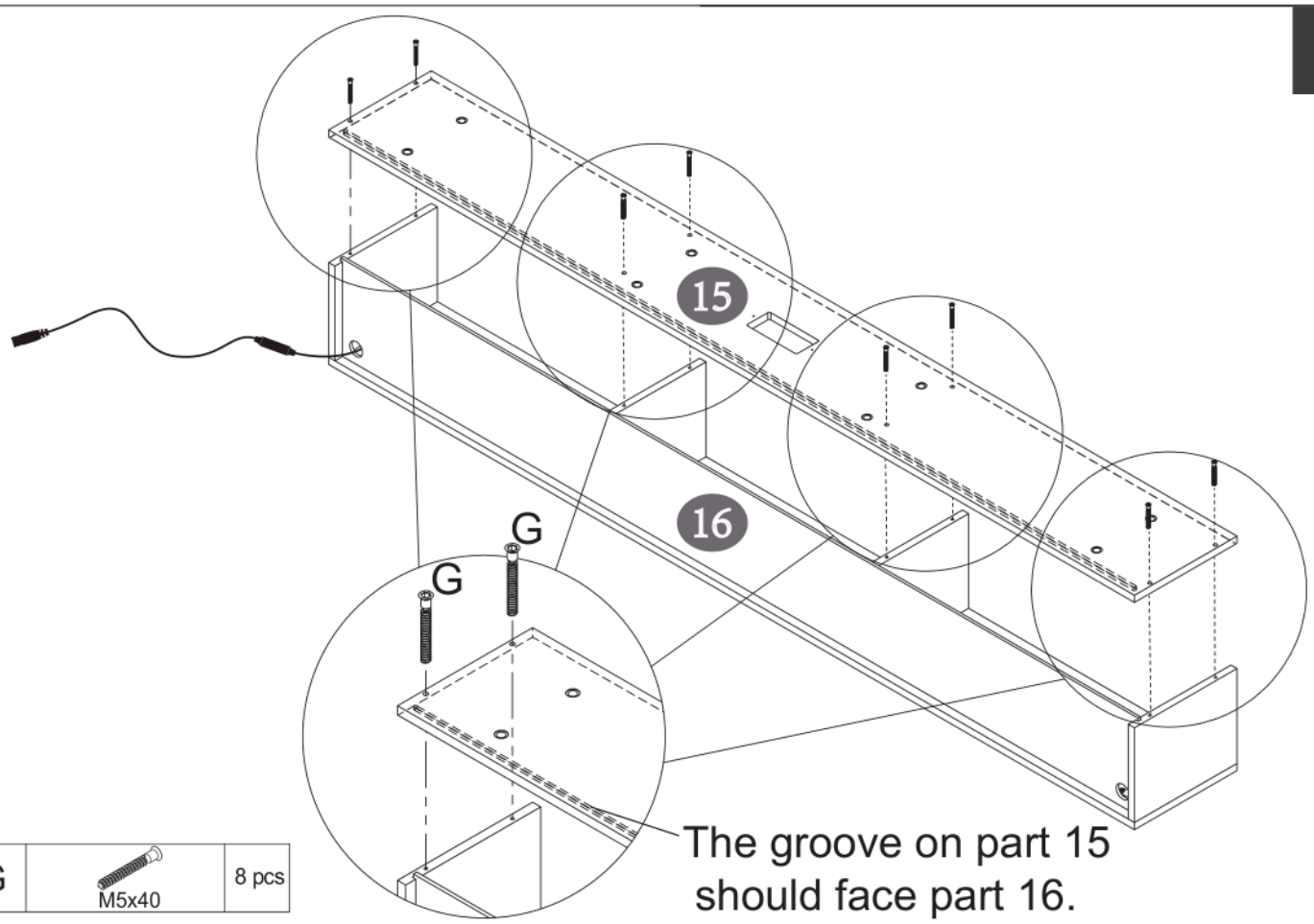

G	M5x40	8 pcs

6

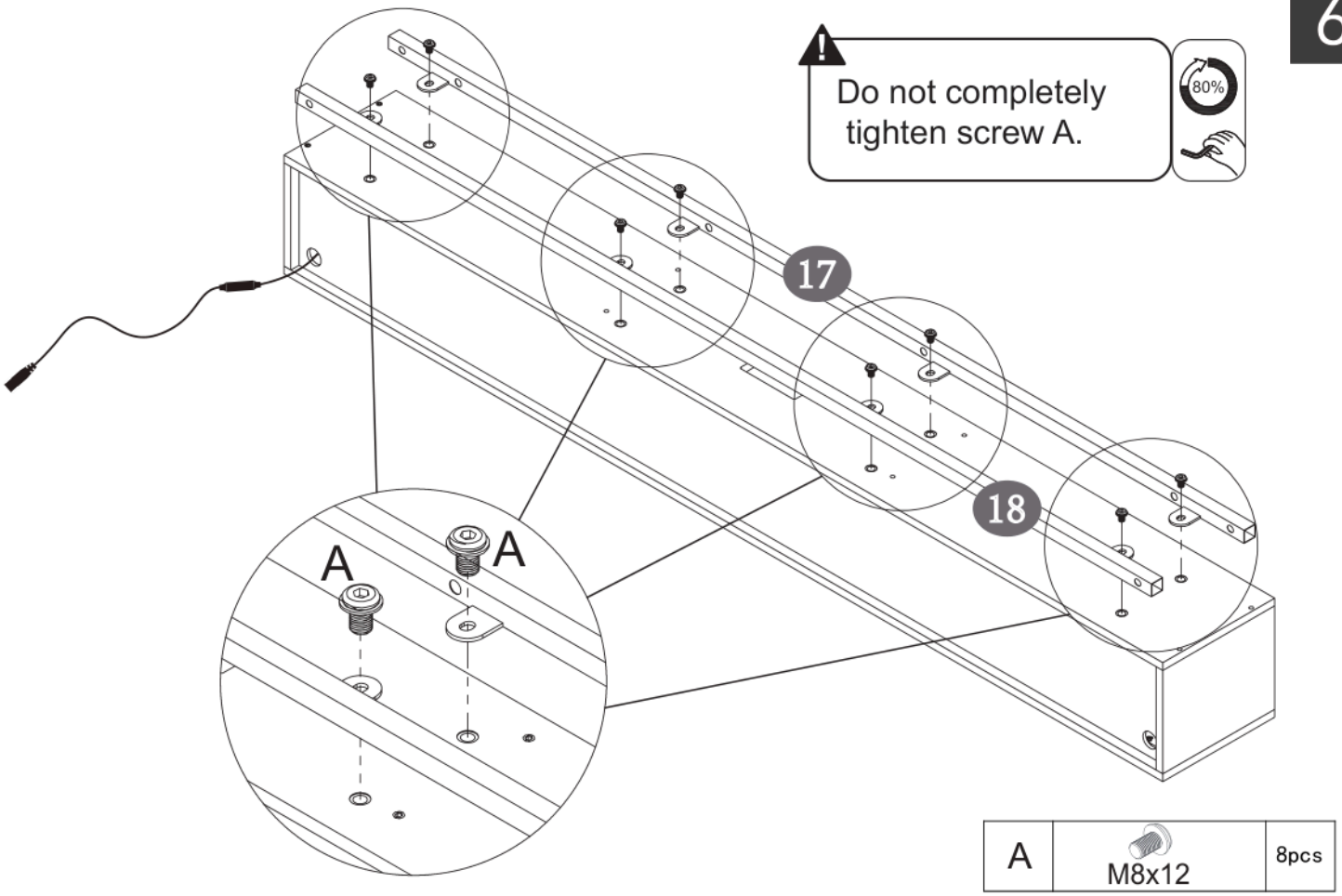

A	M8x12	8pcs

7

Do not completely tighten screw A.

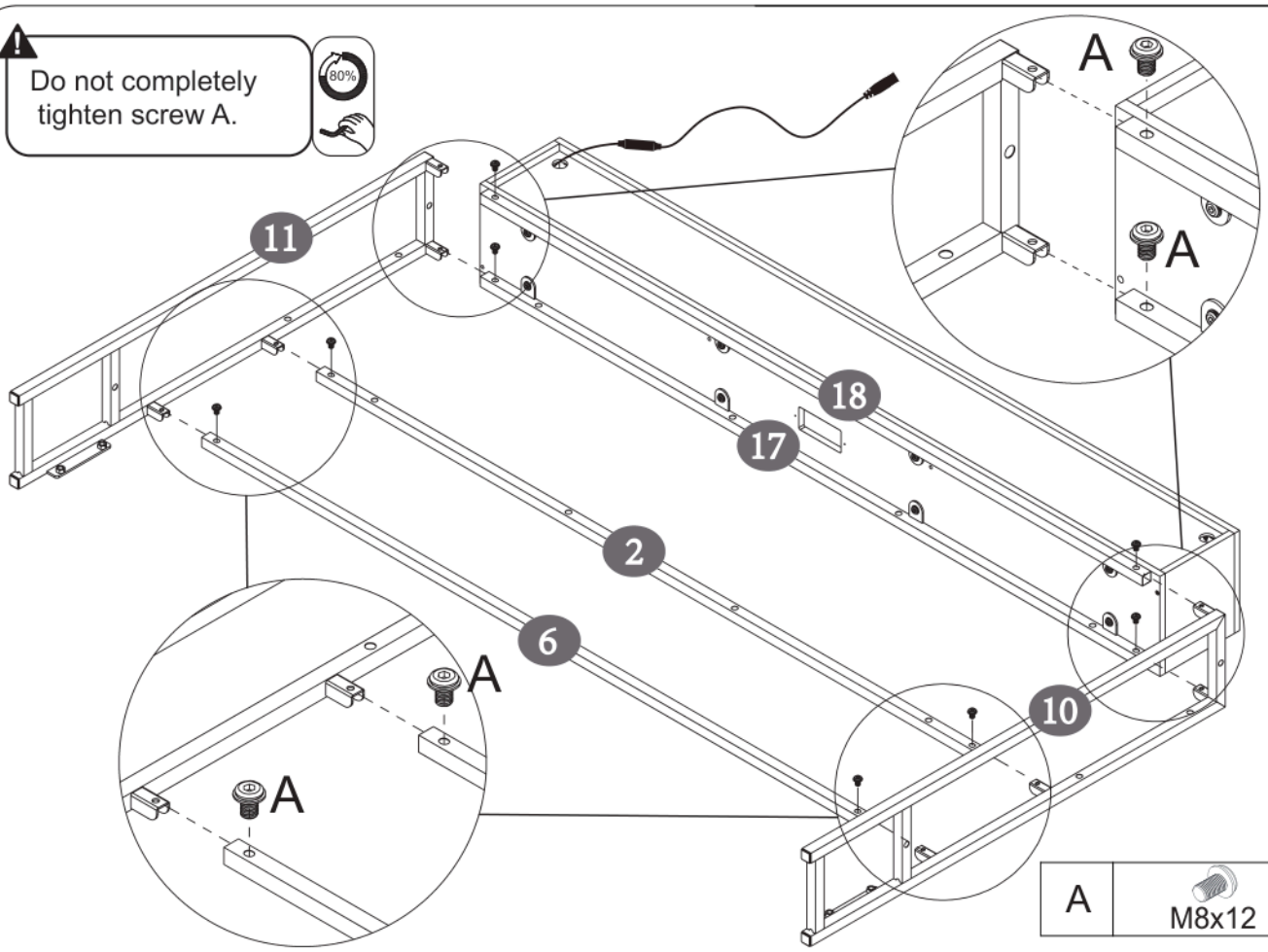

A	M8x12	8pcs

8

Tighten all the screws.

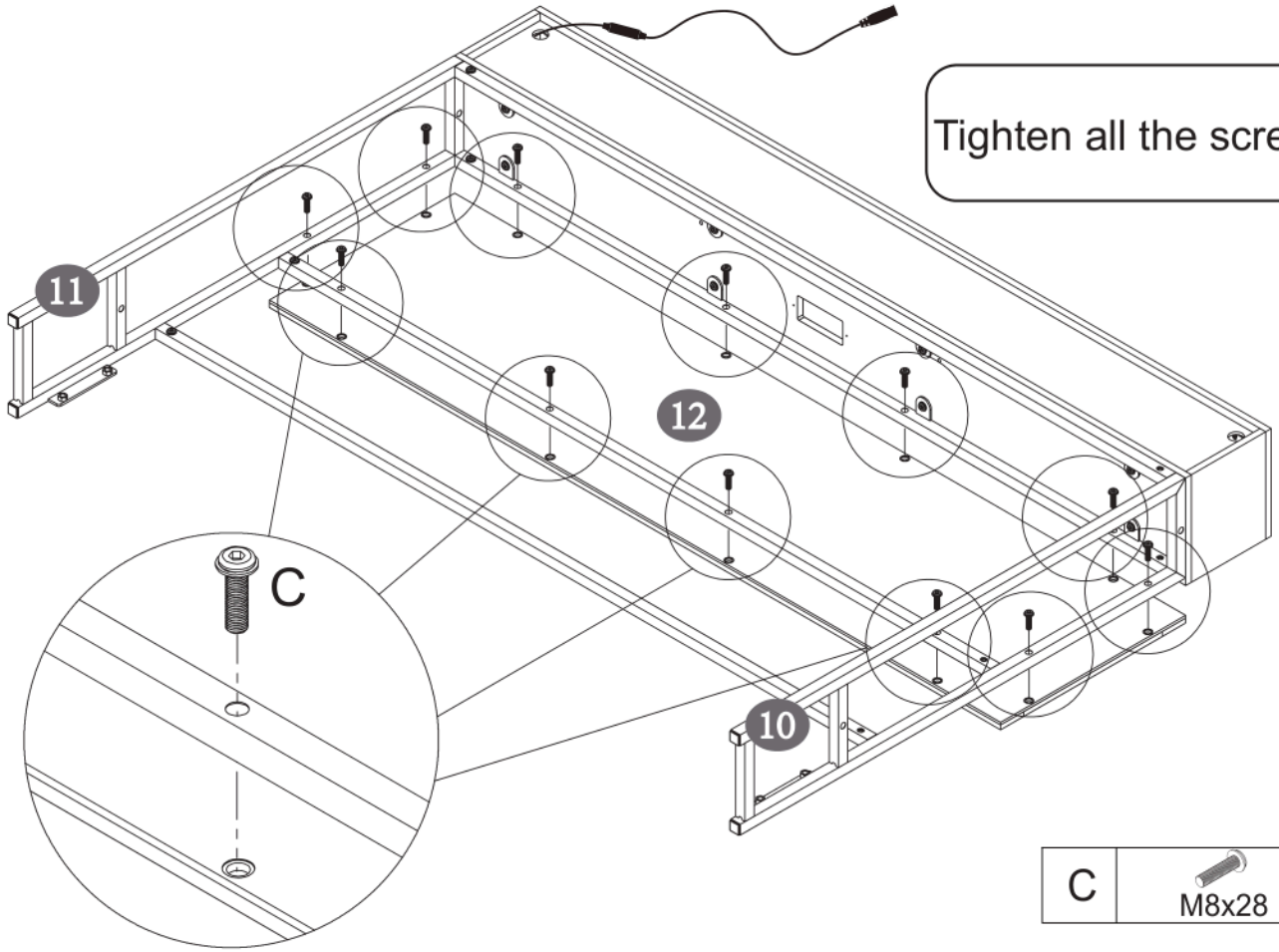

C	M8x28	12pcs

9

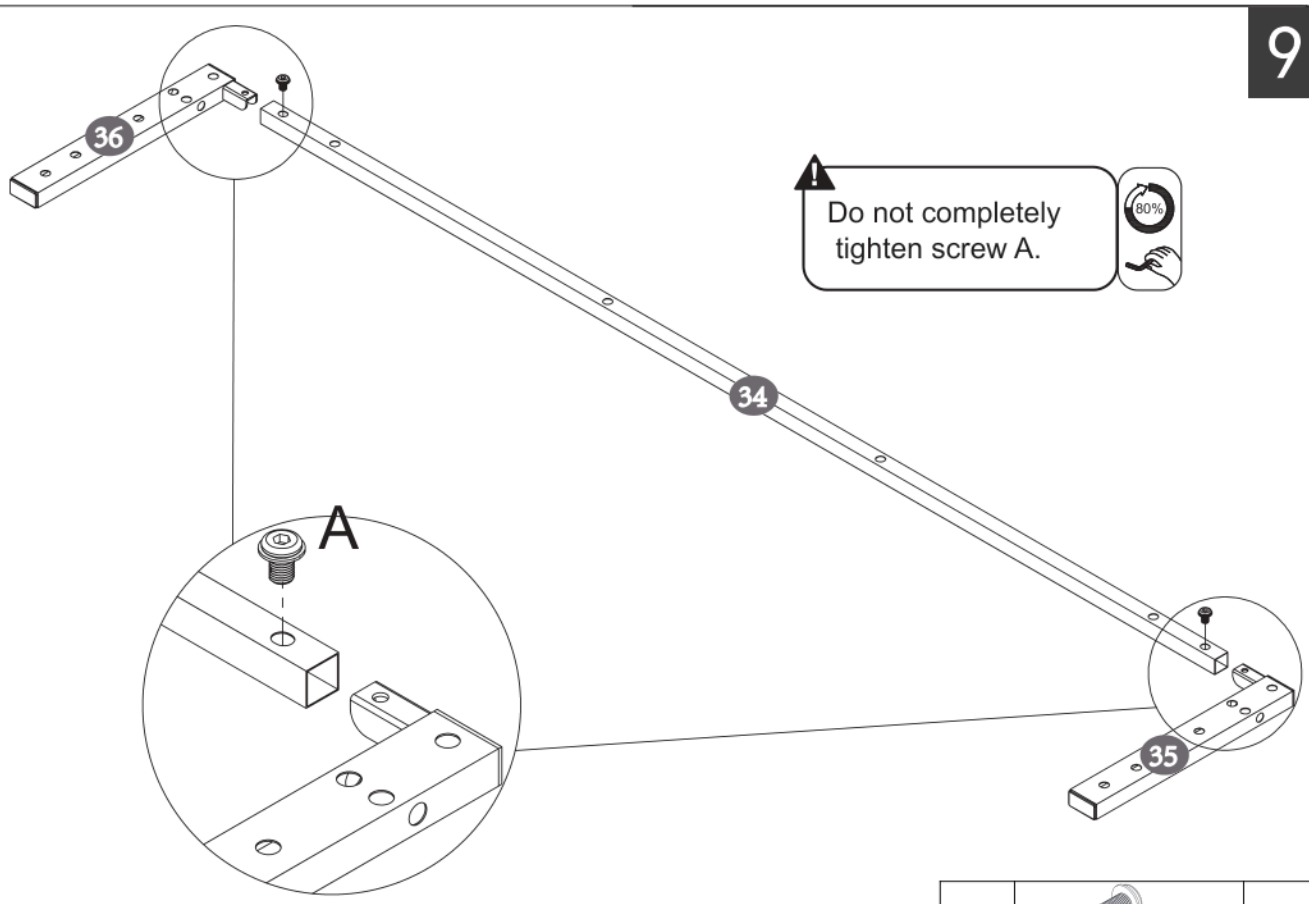

A	M8x12	2pcs

10

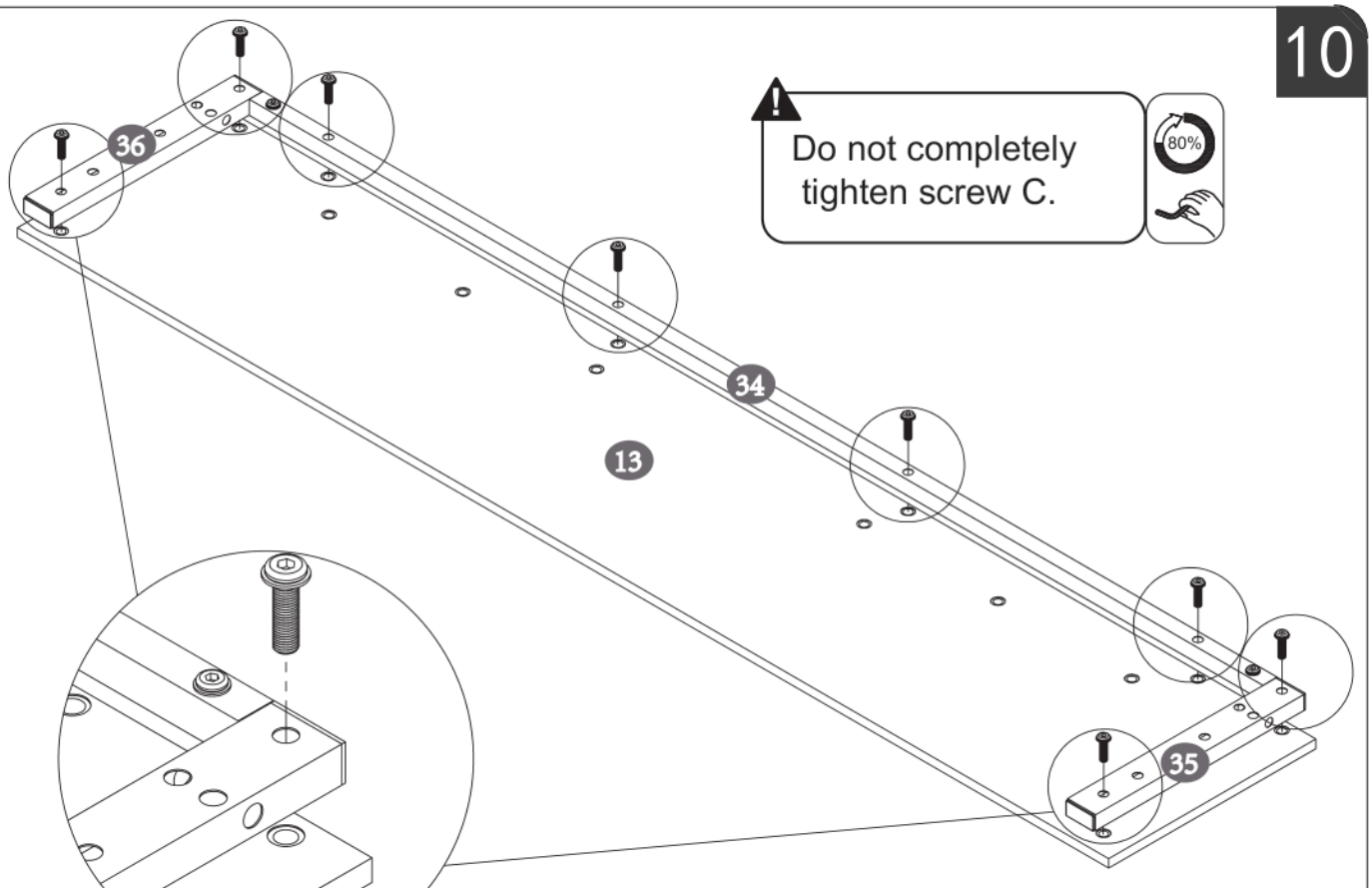

C	M8x28	8pcs

11

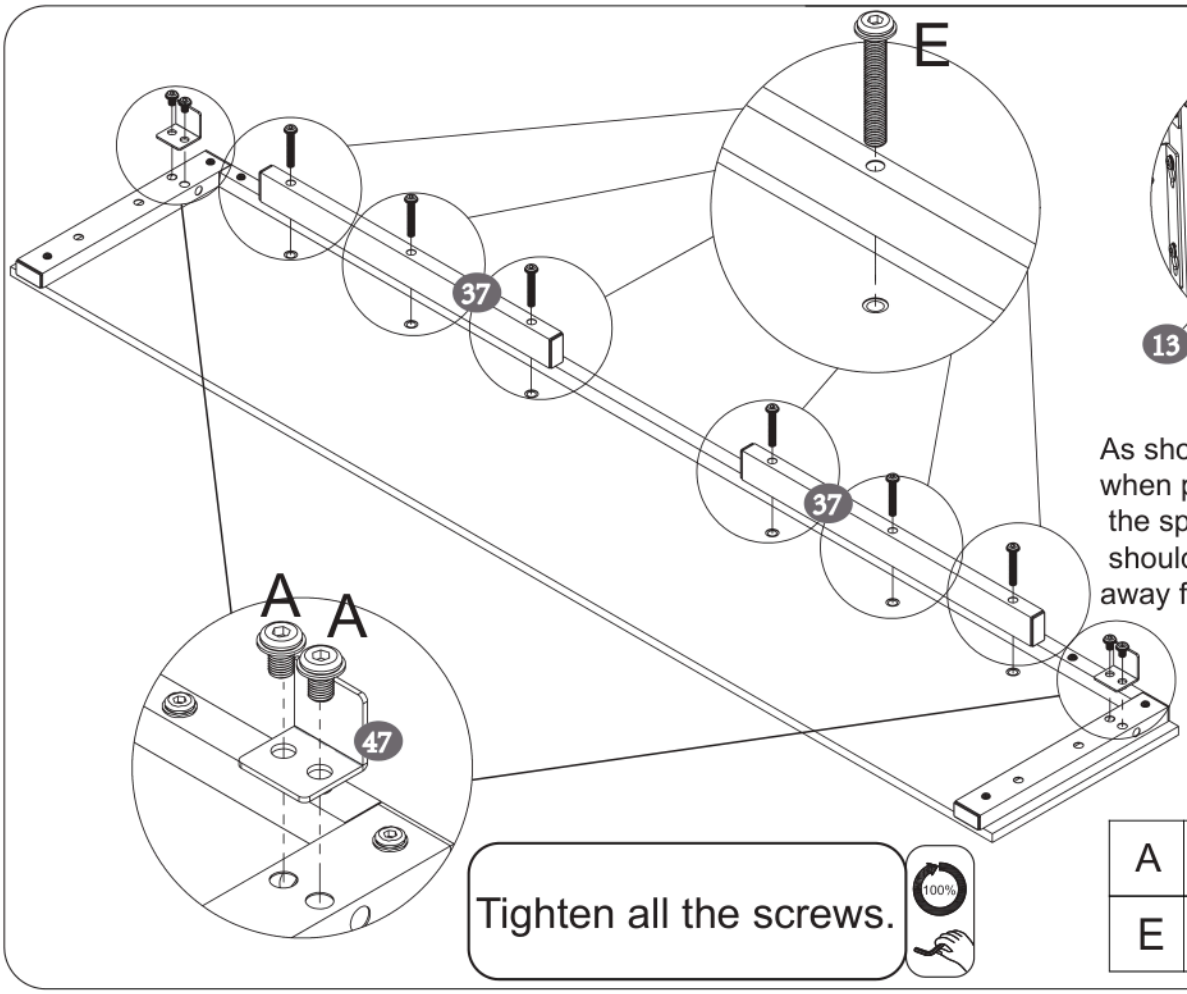

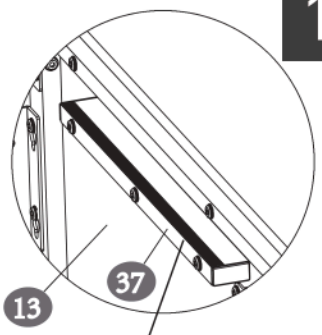

As shown in the figure, when part 37 is fully installed, the sponge cushion of part 37 should face upwards and away from part 13.

Tighten all the screws.

A	M8x12	4pcs
E	M8x50(Color zinc)	6pcs

12

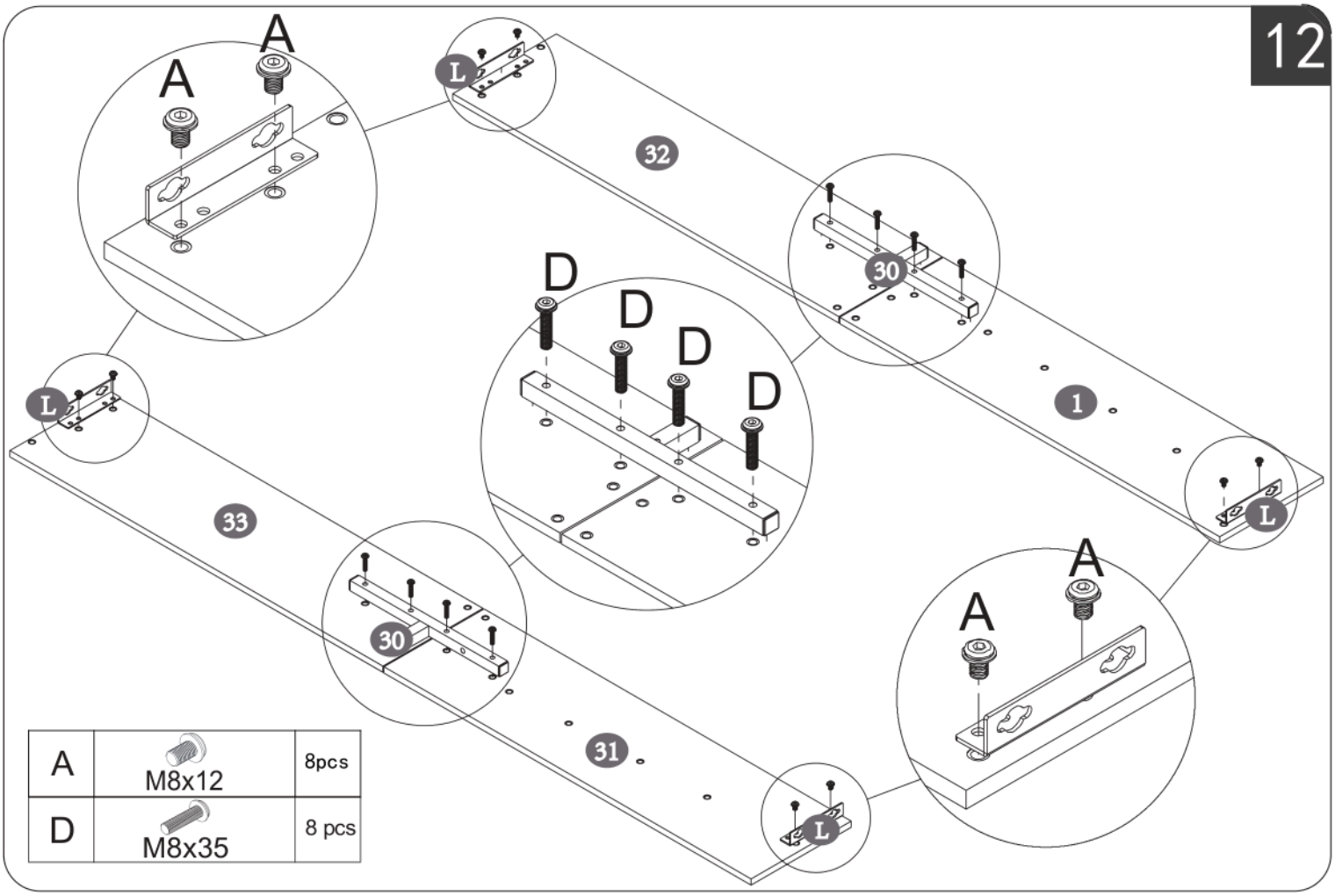

A	M8x12	8pcs
D	M8x35	8 pcs

13

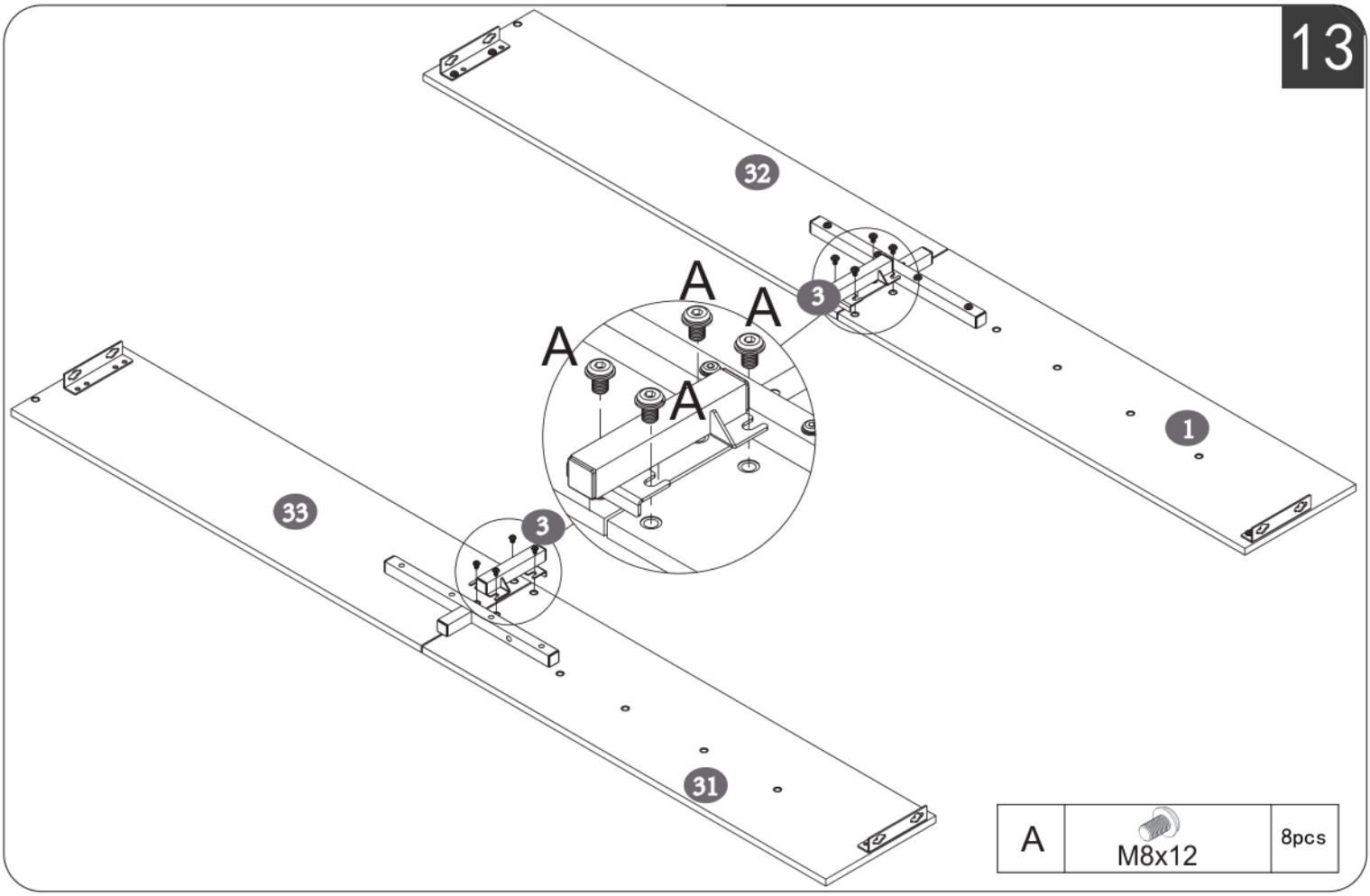

A	M8x12	8pcs

14

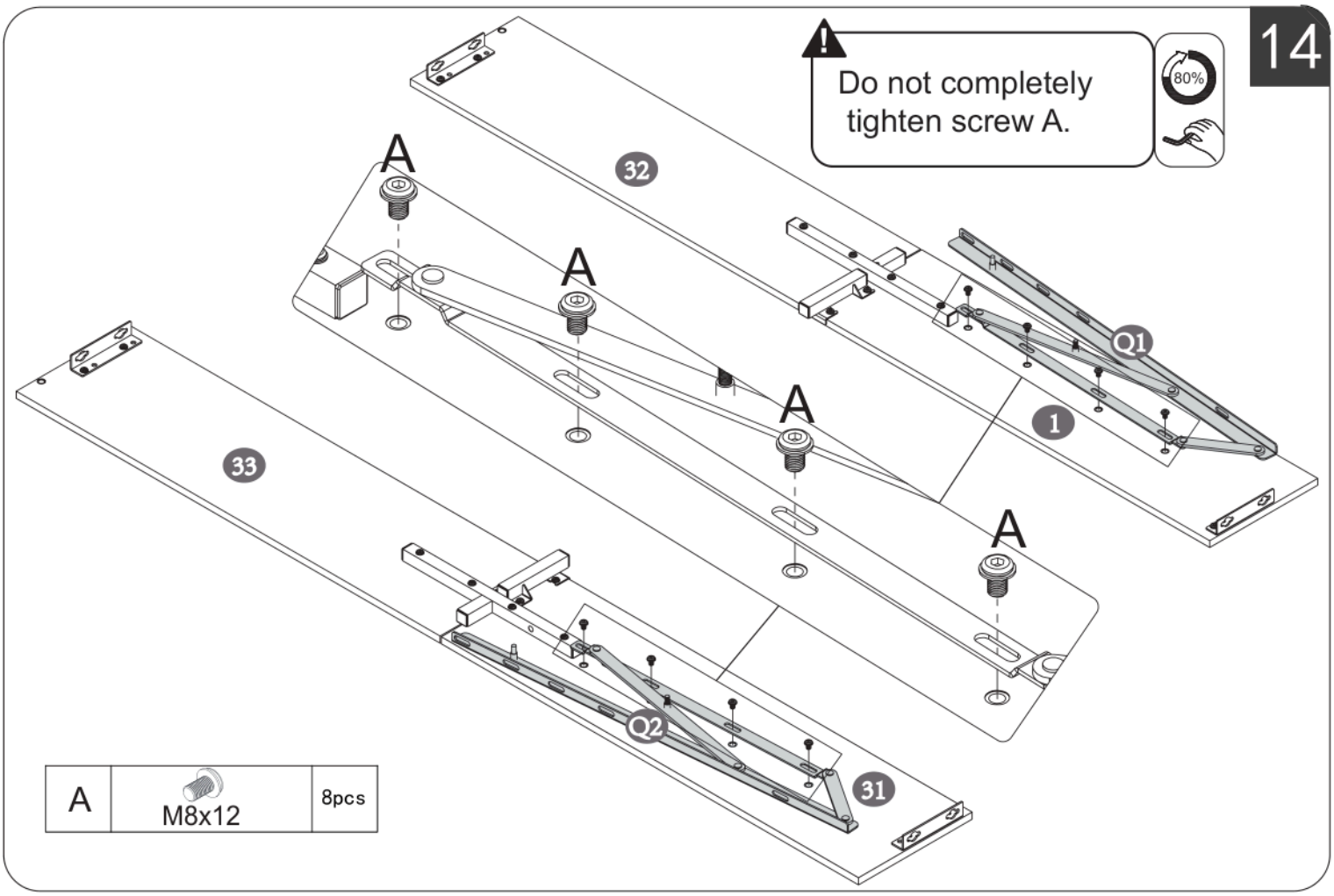

A	M8x12	8pcs

15

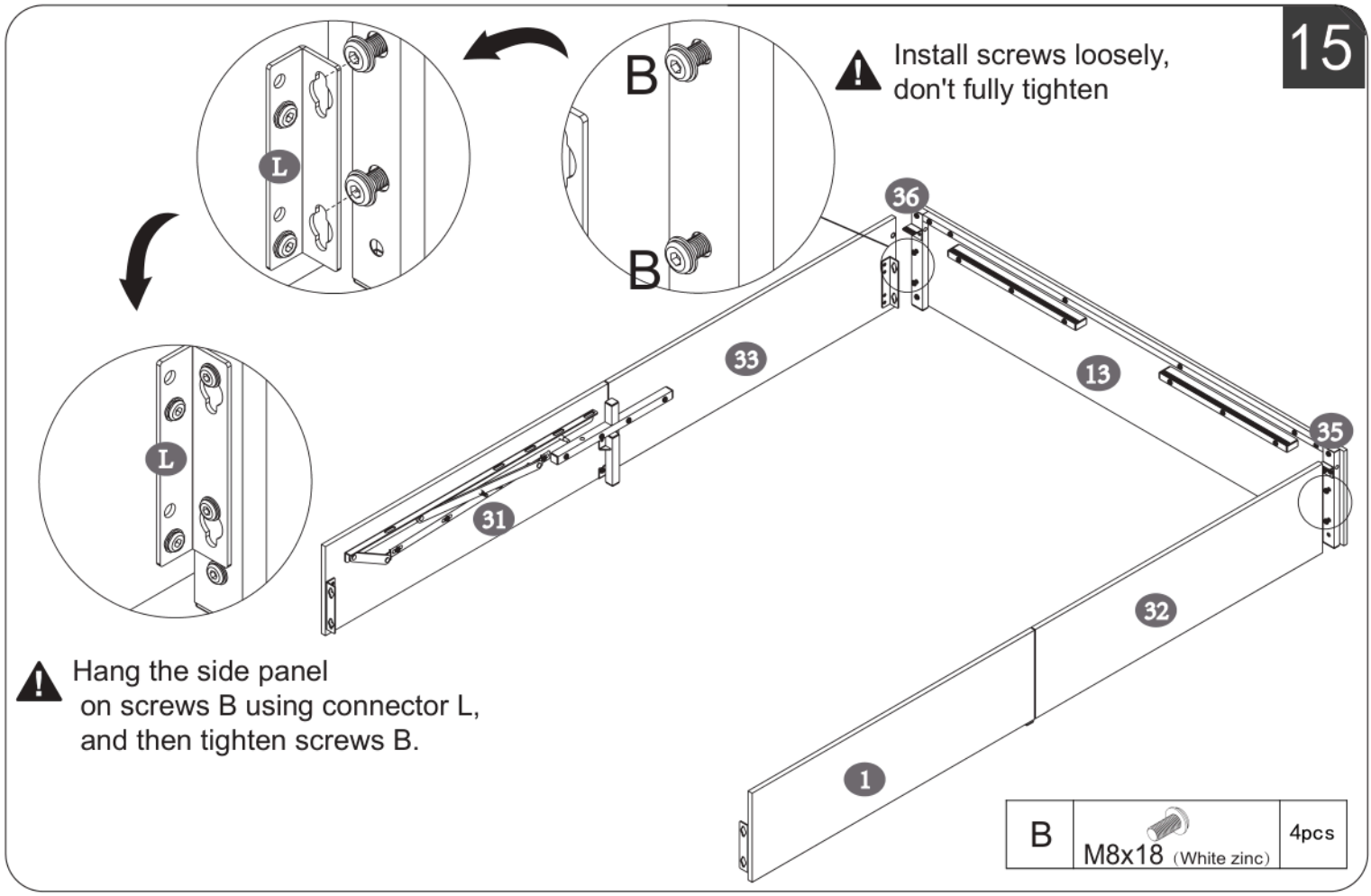
B
B
L
L
Install screws loosely,
don't fully tighten
36
33
13
35
31
32
1
Hang the side panel
on screws B using connector L,
and then tighten screws B.
B
M8x18 (White zinc)
4pcs

16

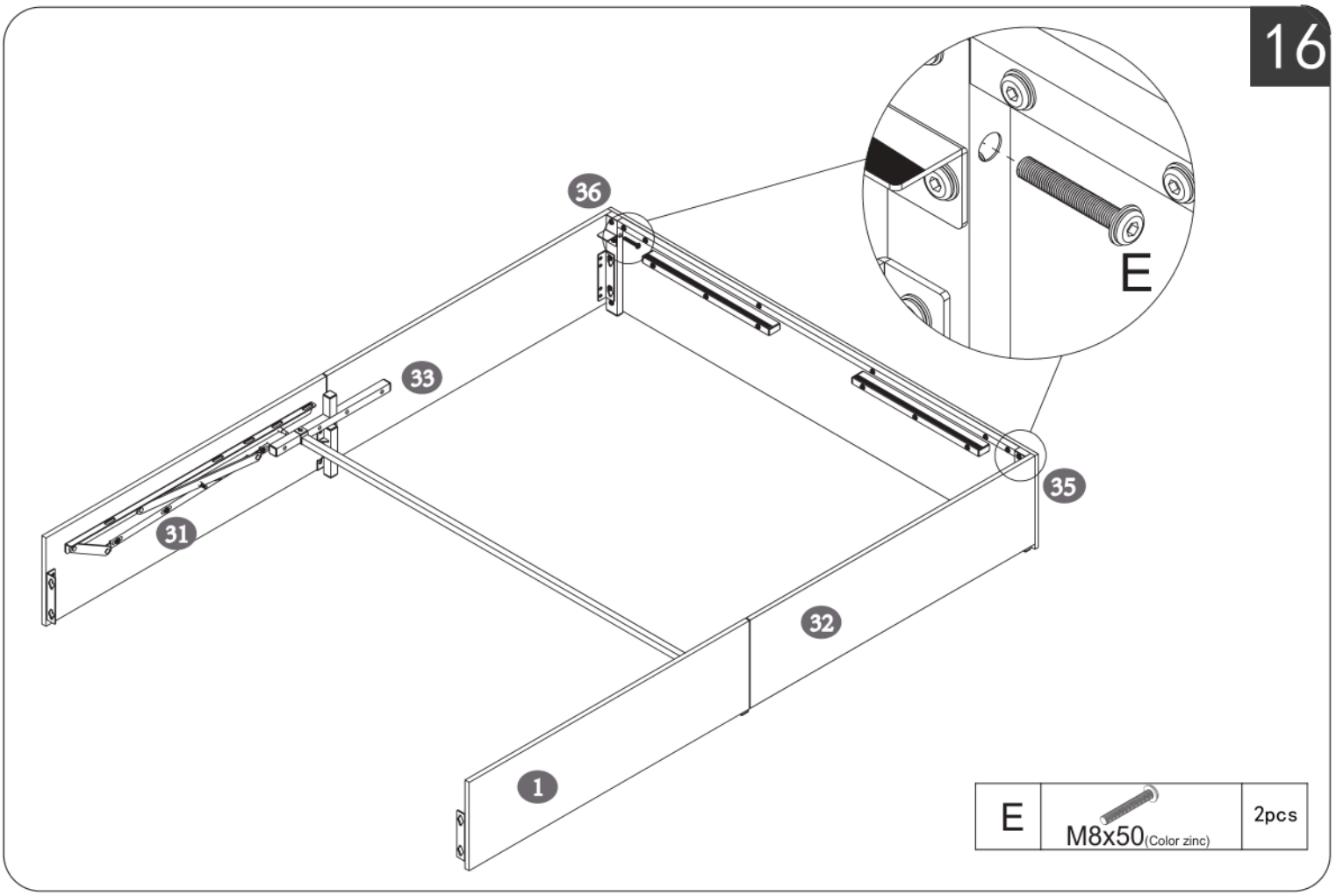
E
36
33
35
31
32
1
E
M8x50(Color zinc)
2pcs

17

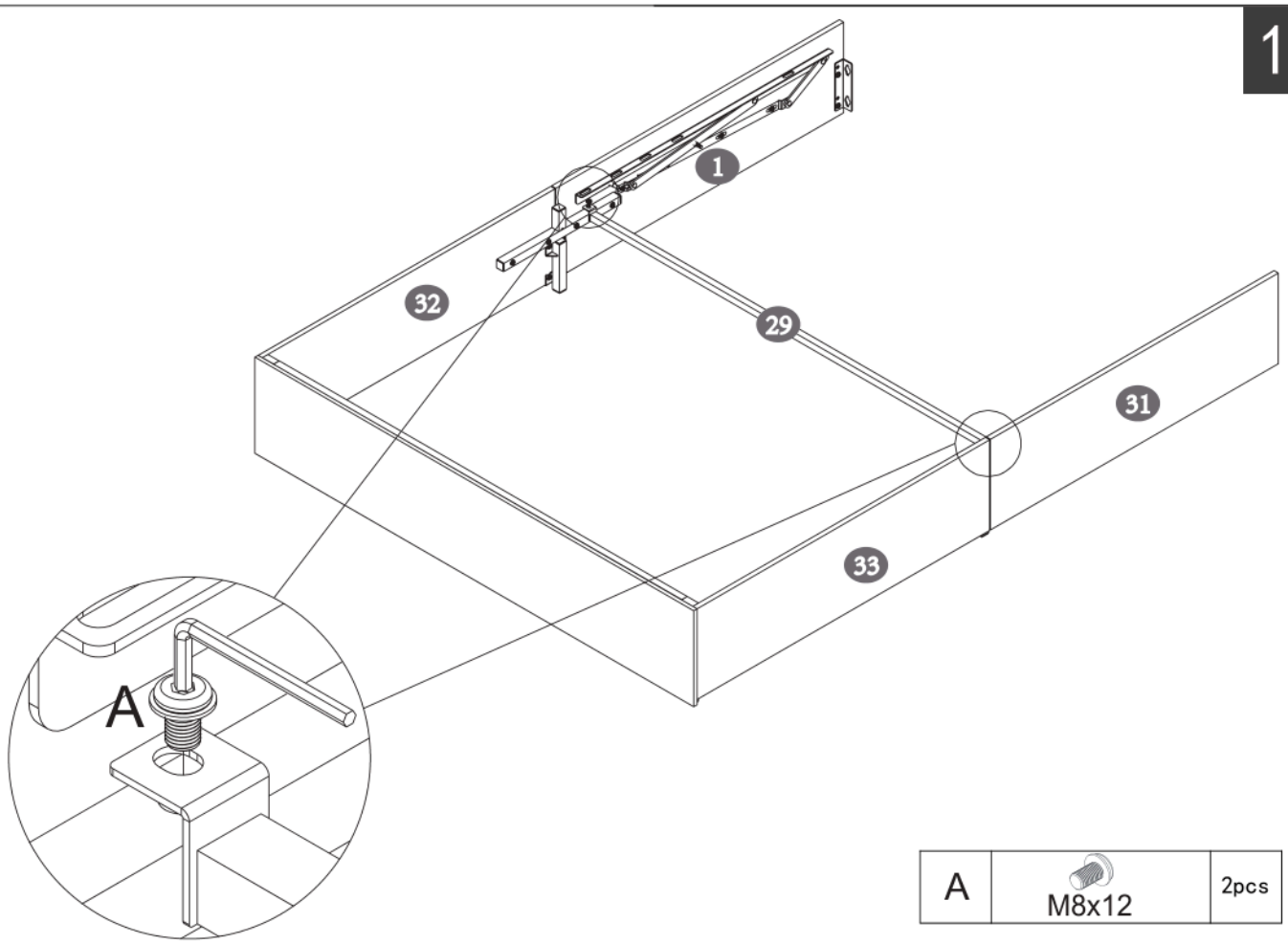

A	M8x12	2pcs

18

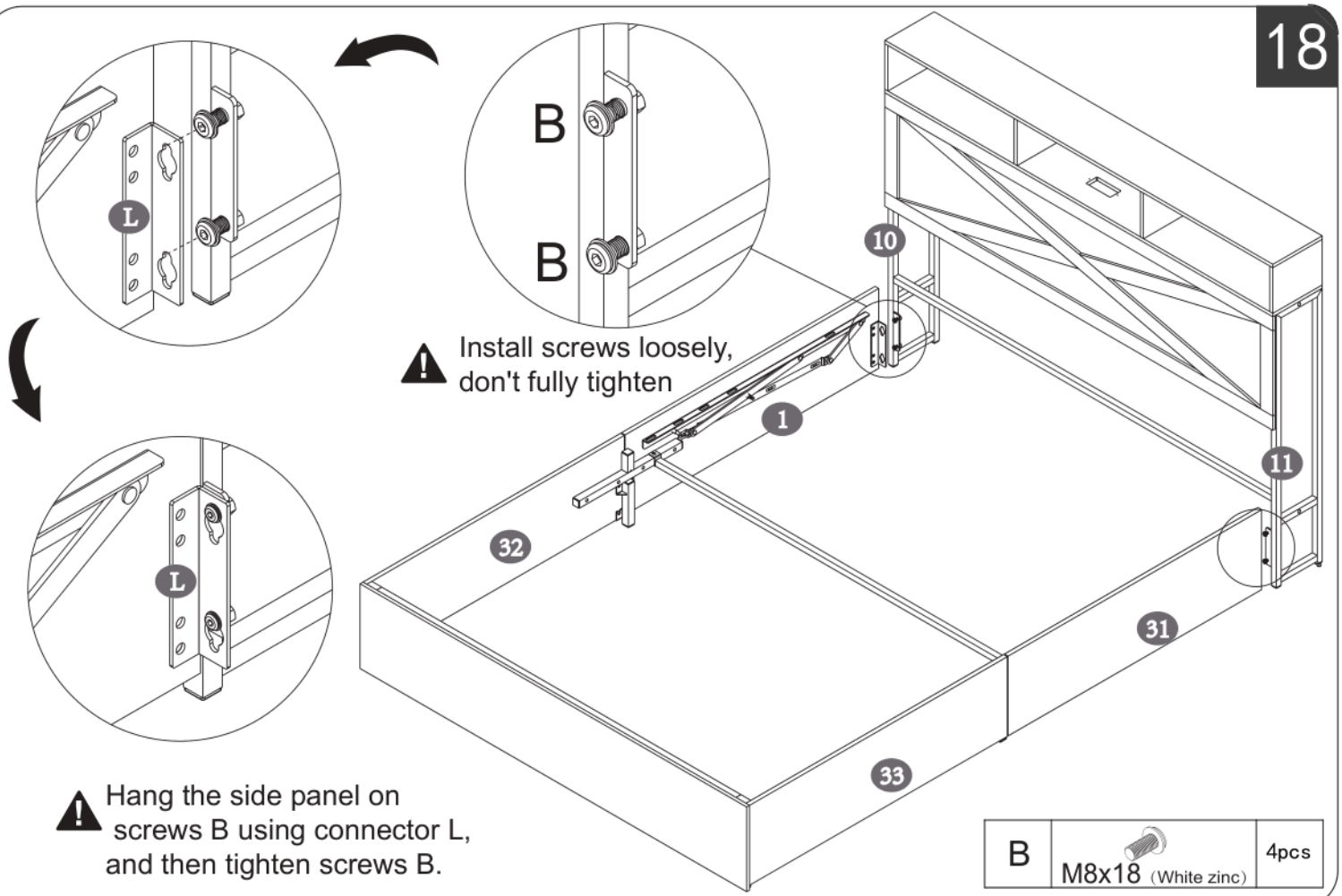

B	M8x18 (White zinc)	4pcs

19

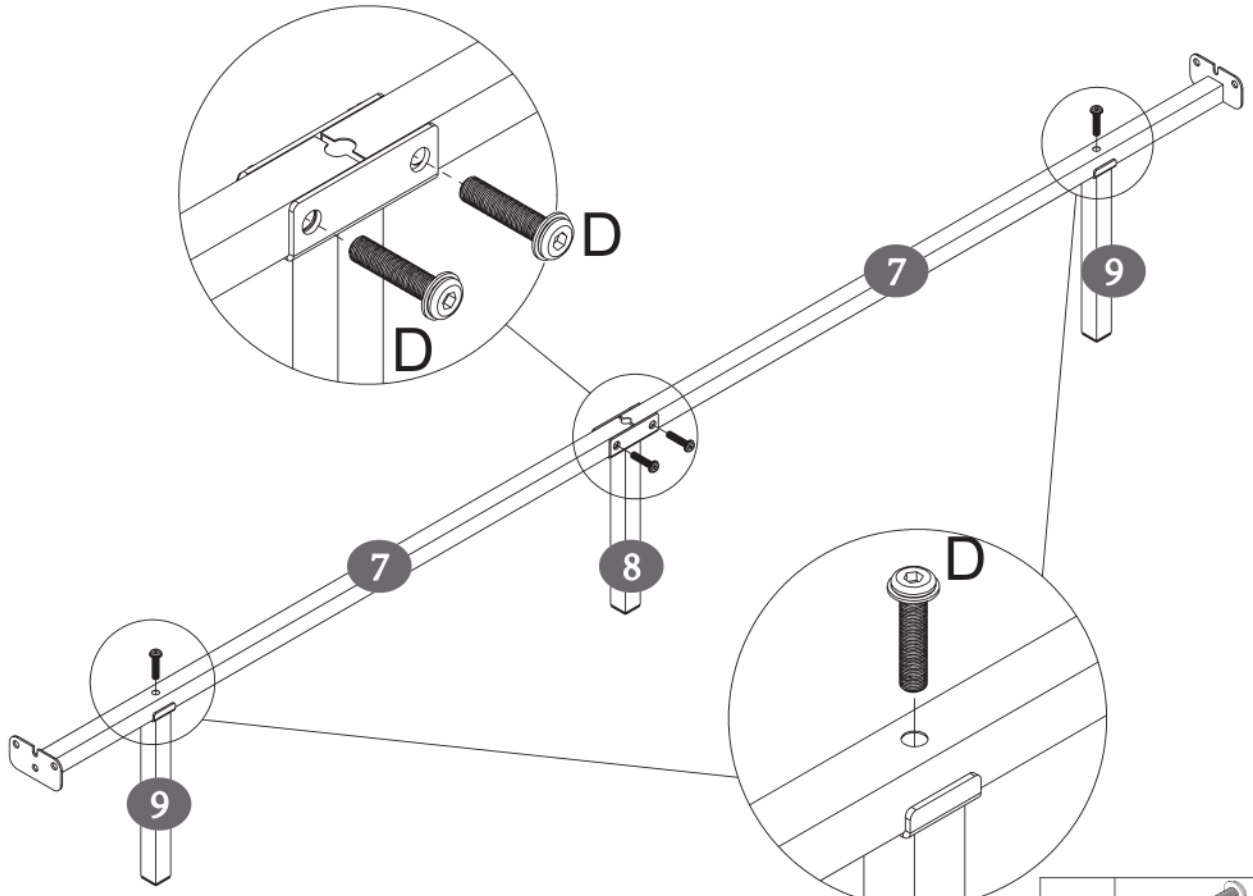

D	M8x35	4 pcs

20

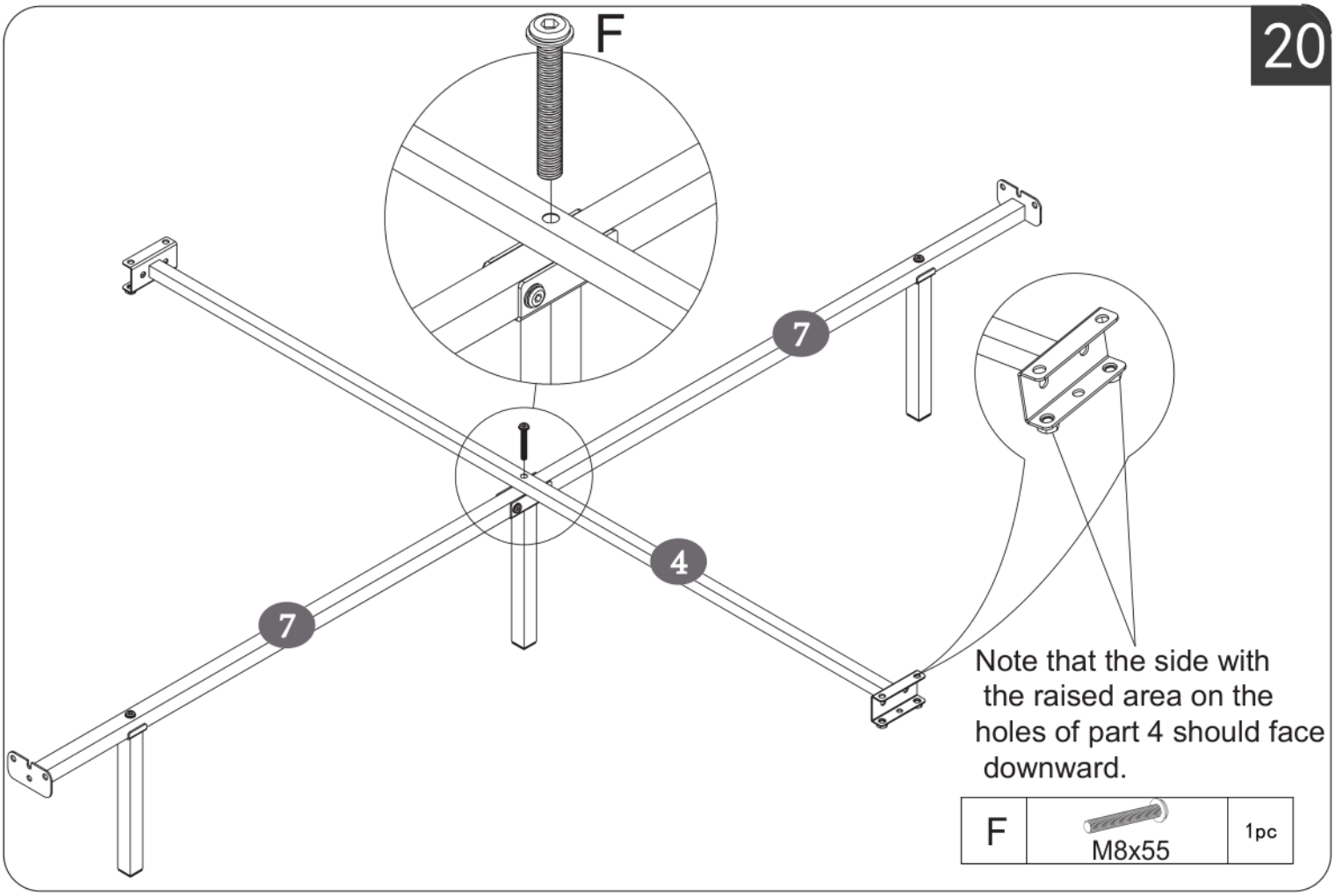

Note that the side with the raised area on the holes of part 4 should face downward.

F	M8x55	1pc

21

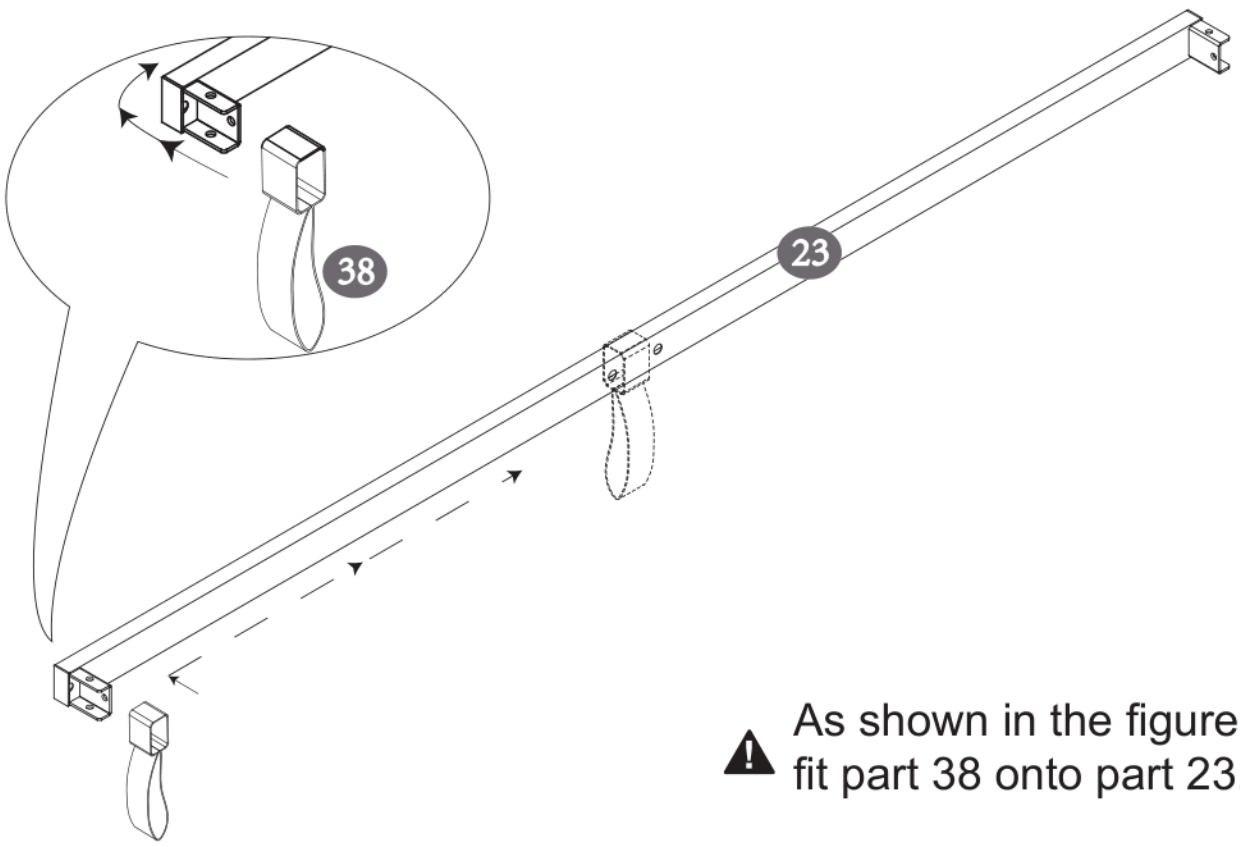

⚠ As shown in the figure, fit part 38 onto part 23.

22

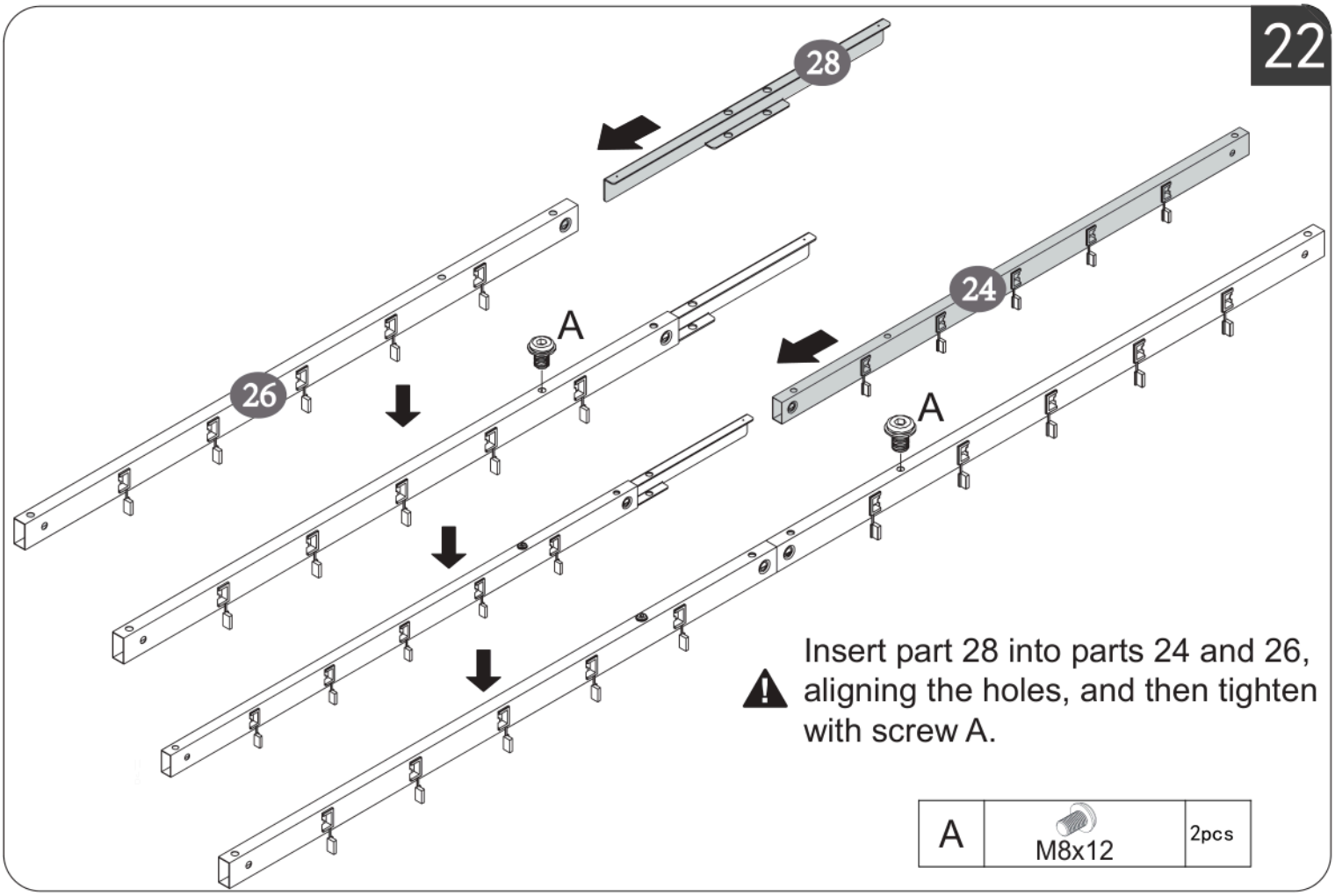

⚠ Insert part 28 into parts 24 and 26, aligning the holes, and then tighten with screw A.

A	M8x12	2pcs

23

Insert part 28 into parts 25 and 27, aligning the holes, and then tighten with screw A.

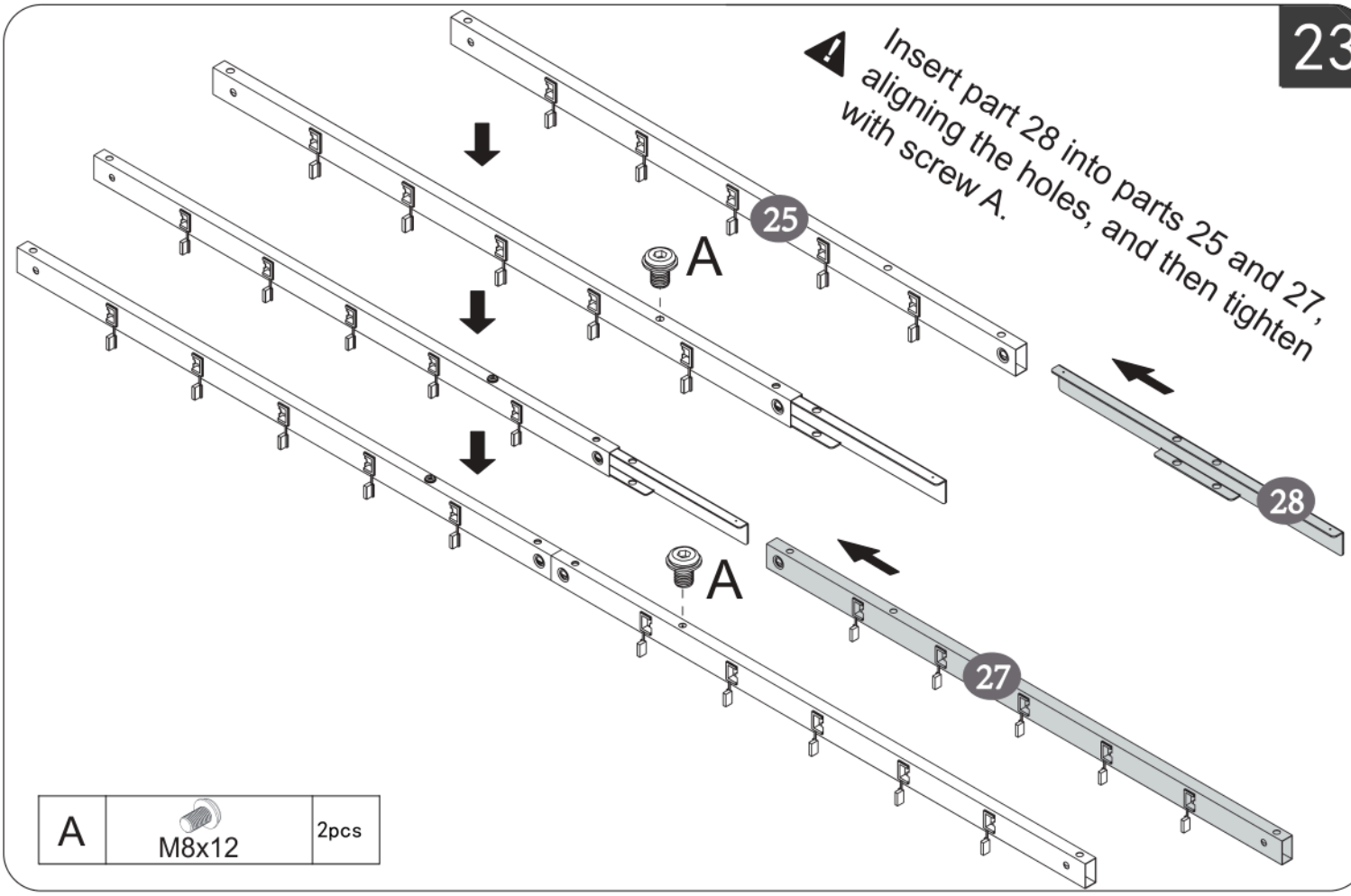

A	M8x12	2pcs

24

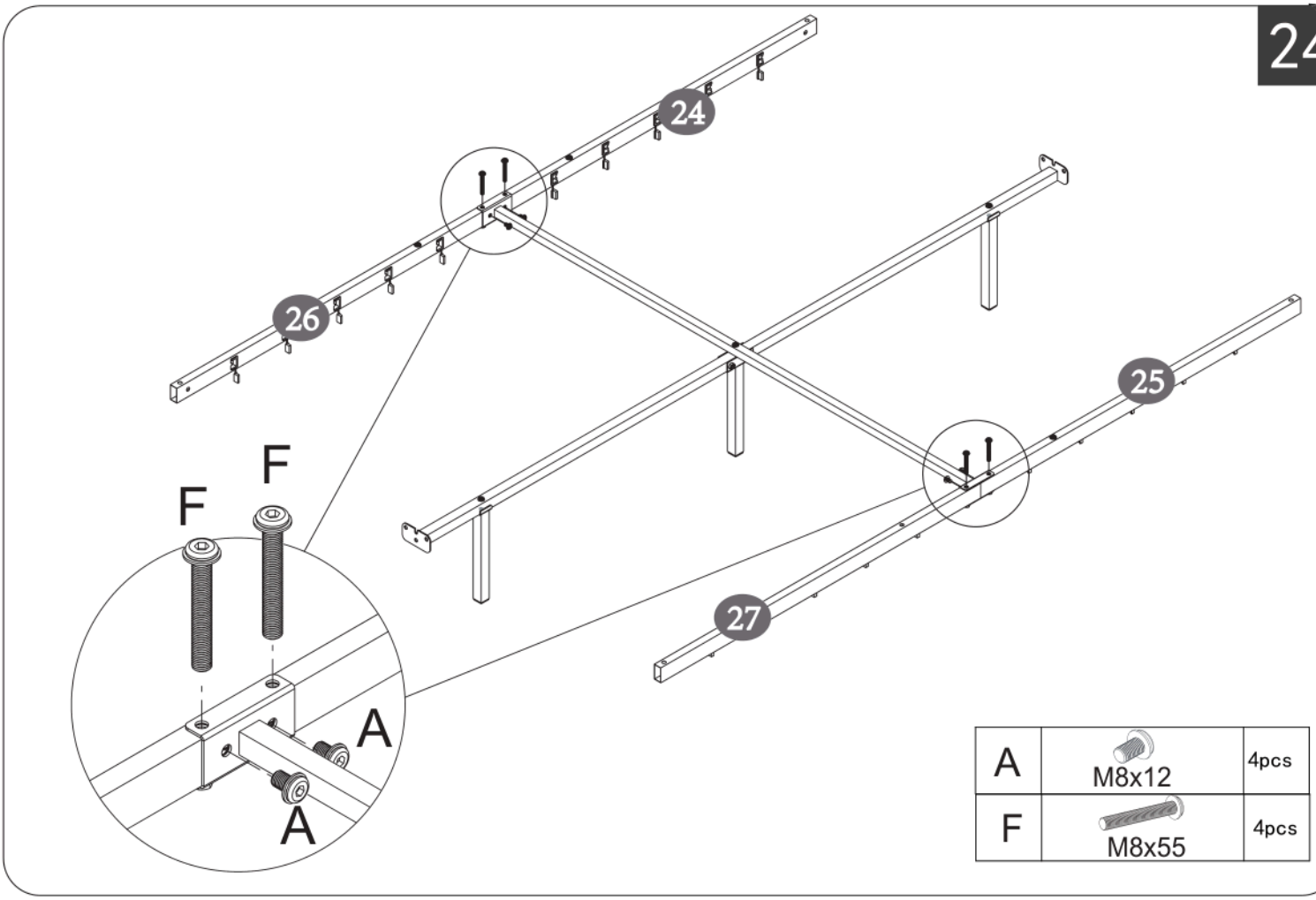

A	M8x12	4pcs
F	M8x55	4pcs

25

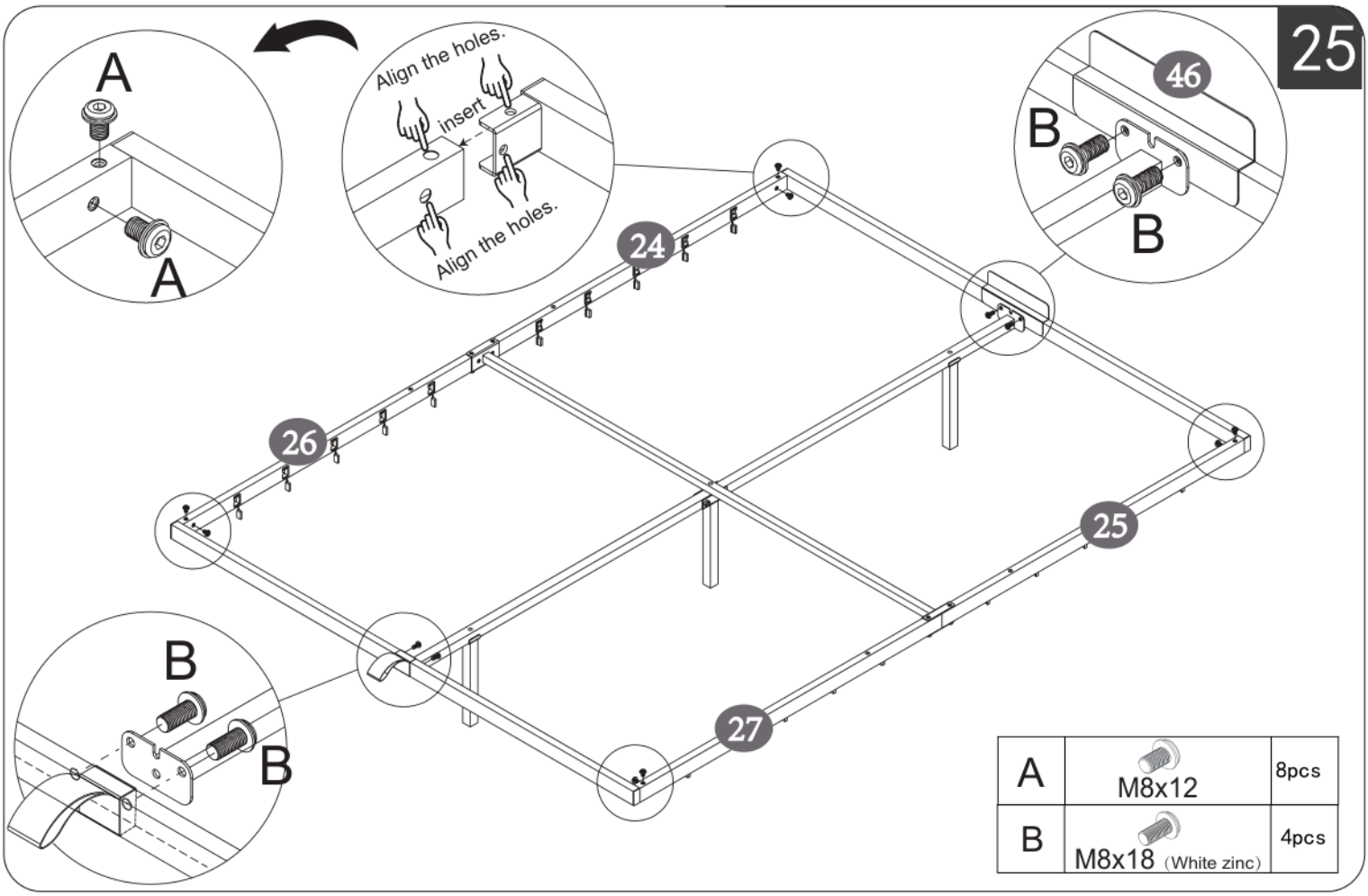

A	M8x12	8pcs
B	M8x18 (White zinc)	4pcs

26

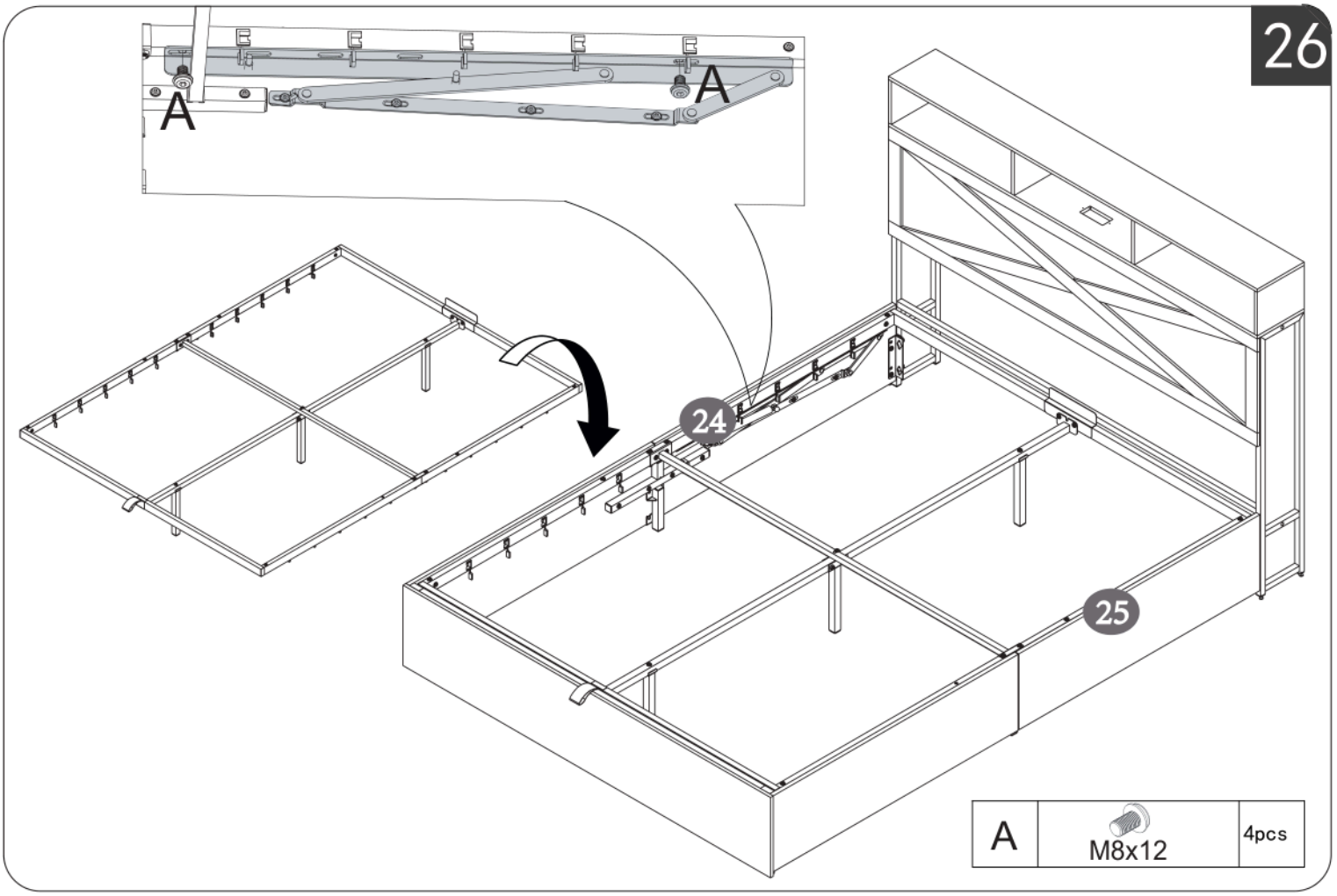

A	M8x12	4pcs

27

Lift the frame and install part Q3.

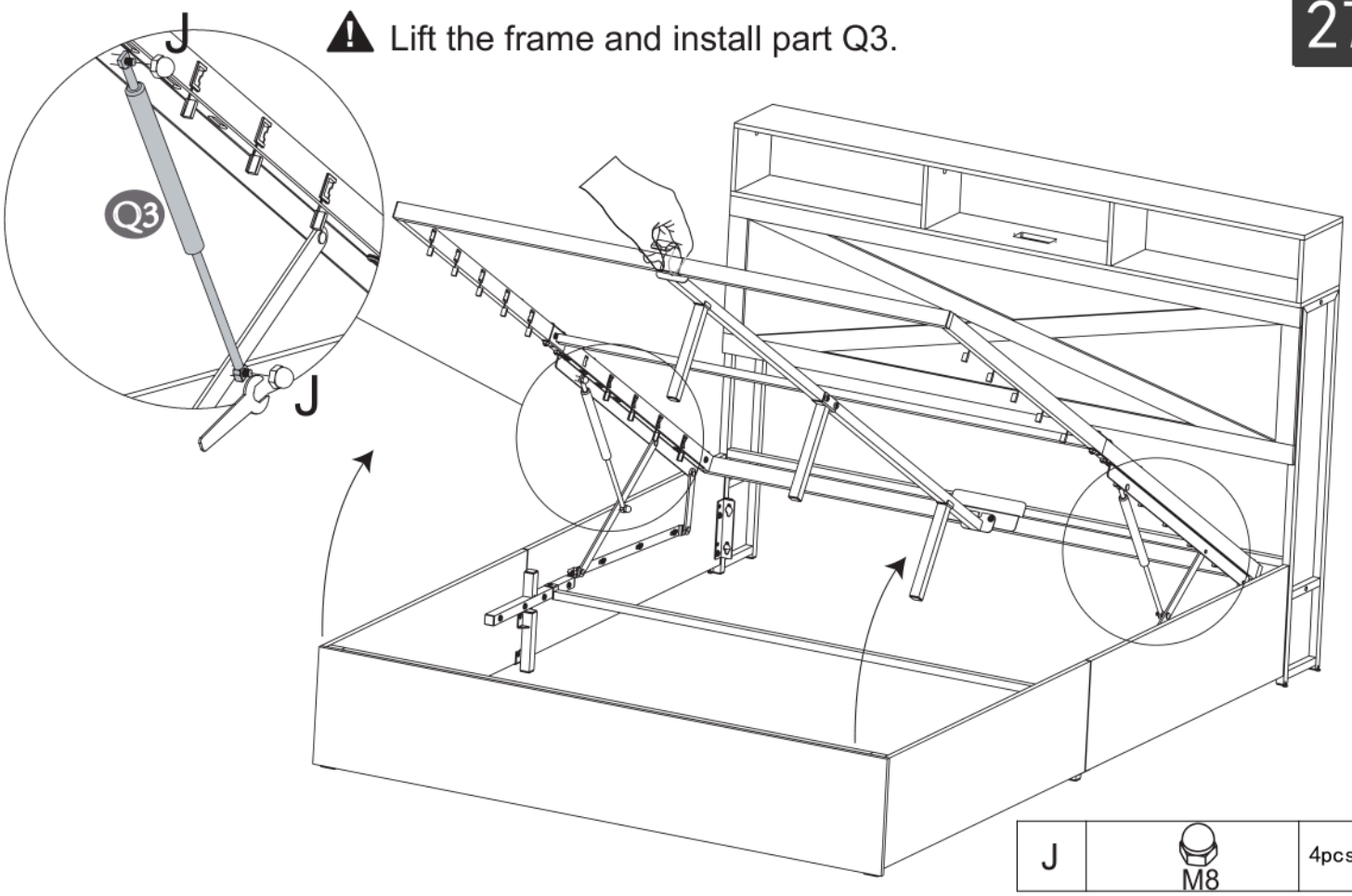

J	M8	4pcs

28

Please push the fastener block c firmly to ensure a secure installation.

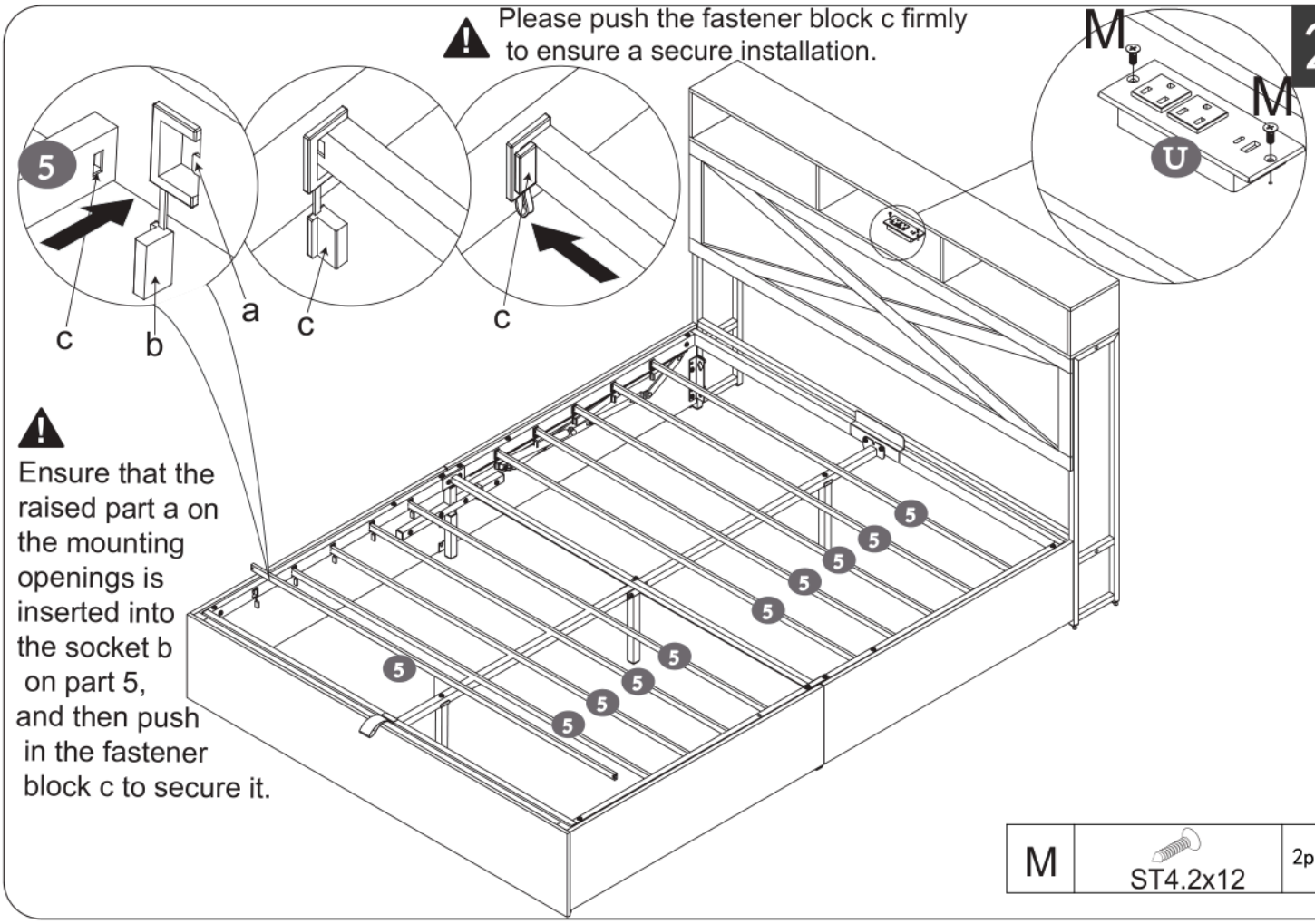

Ensure that the raised part a on the mounting openings is inserted into the socket b on part 5, and then push in the fastener block c to secure it.

M	ST4.2x12	2pcs

29

2X

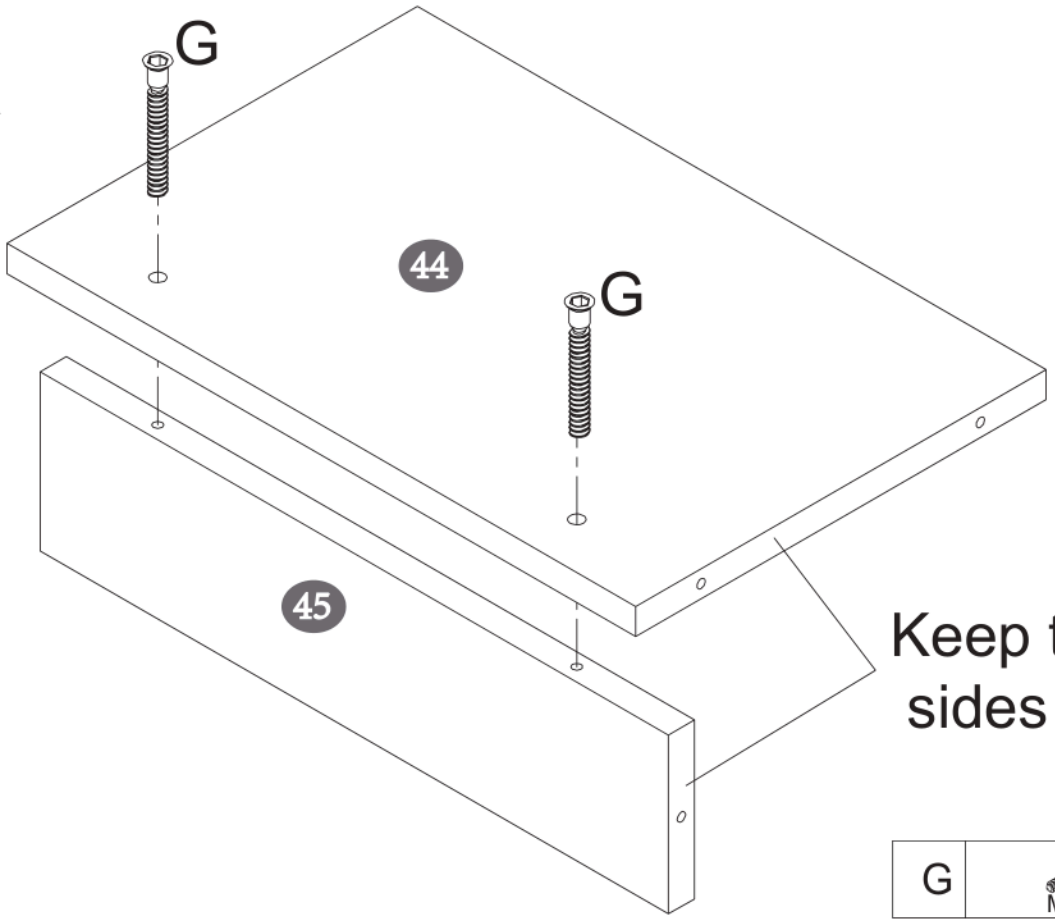

Keep the two sides flush

G	M5x40	4pcs

30

2X

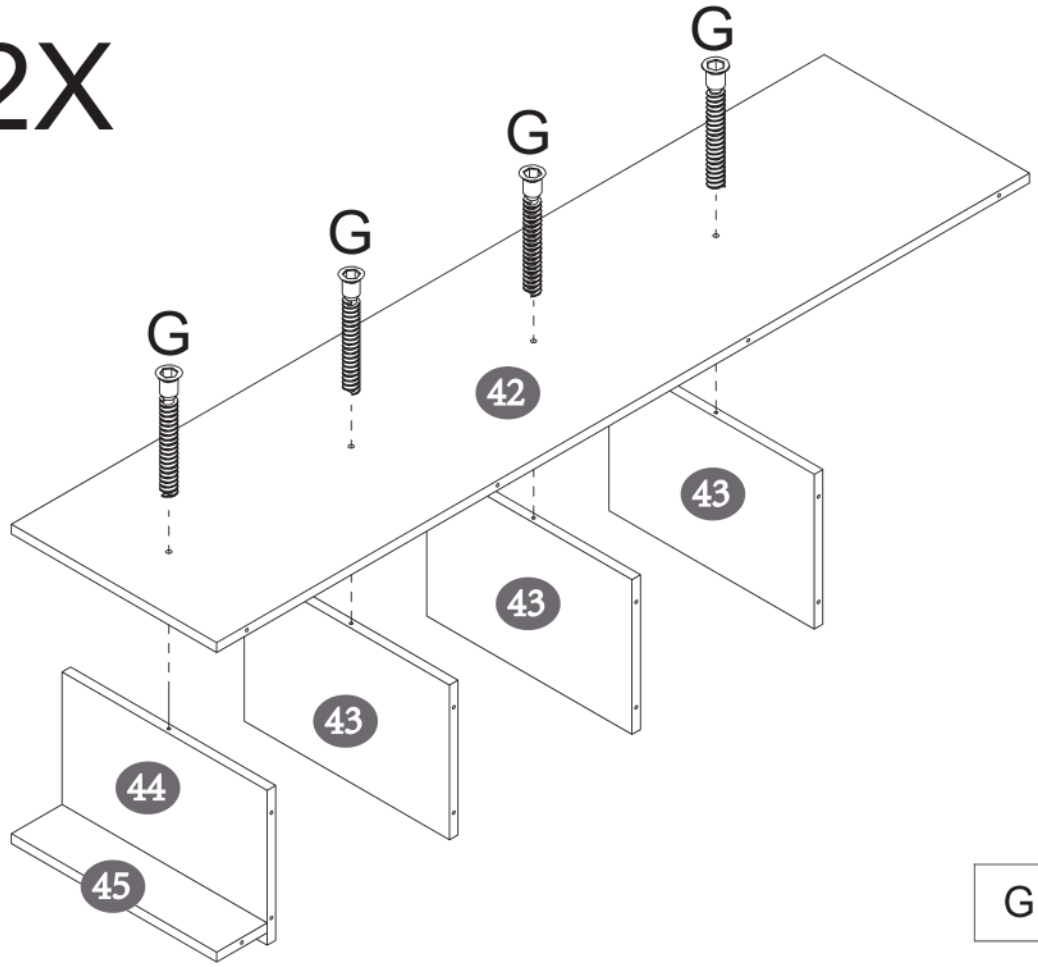

G	M5x40	8pcs

31

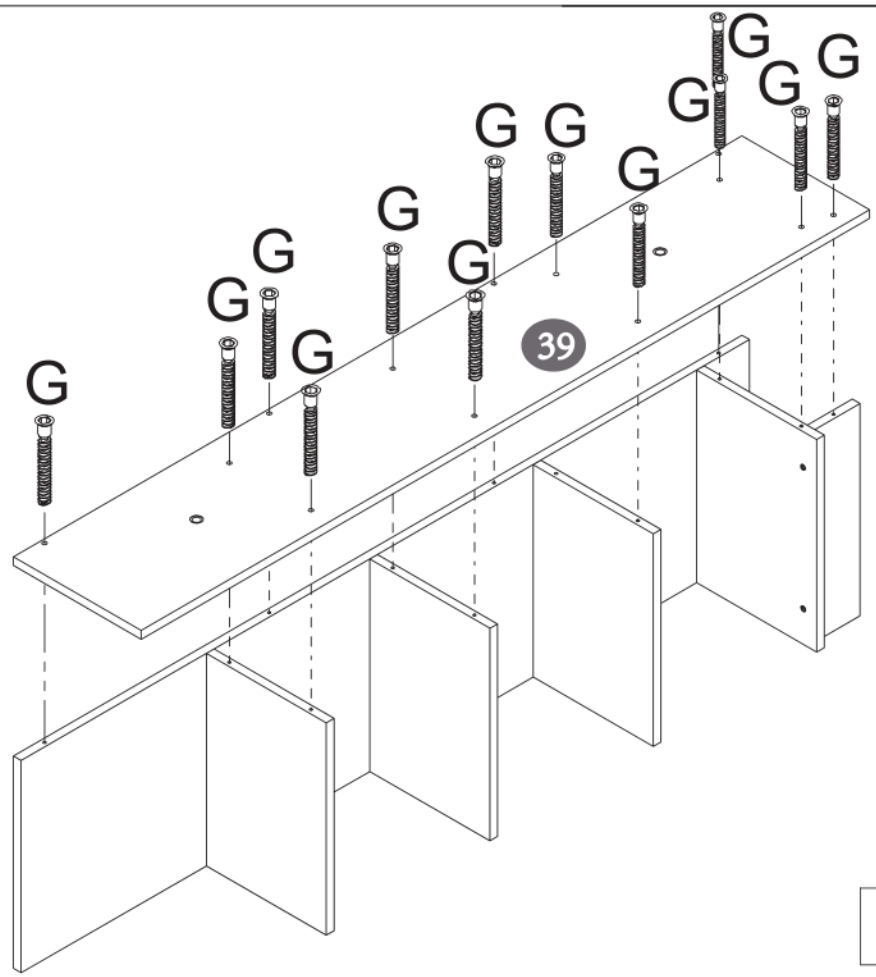

G	 M5x40	13pcs

32

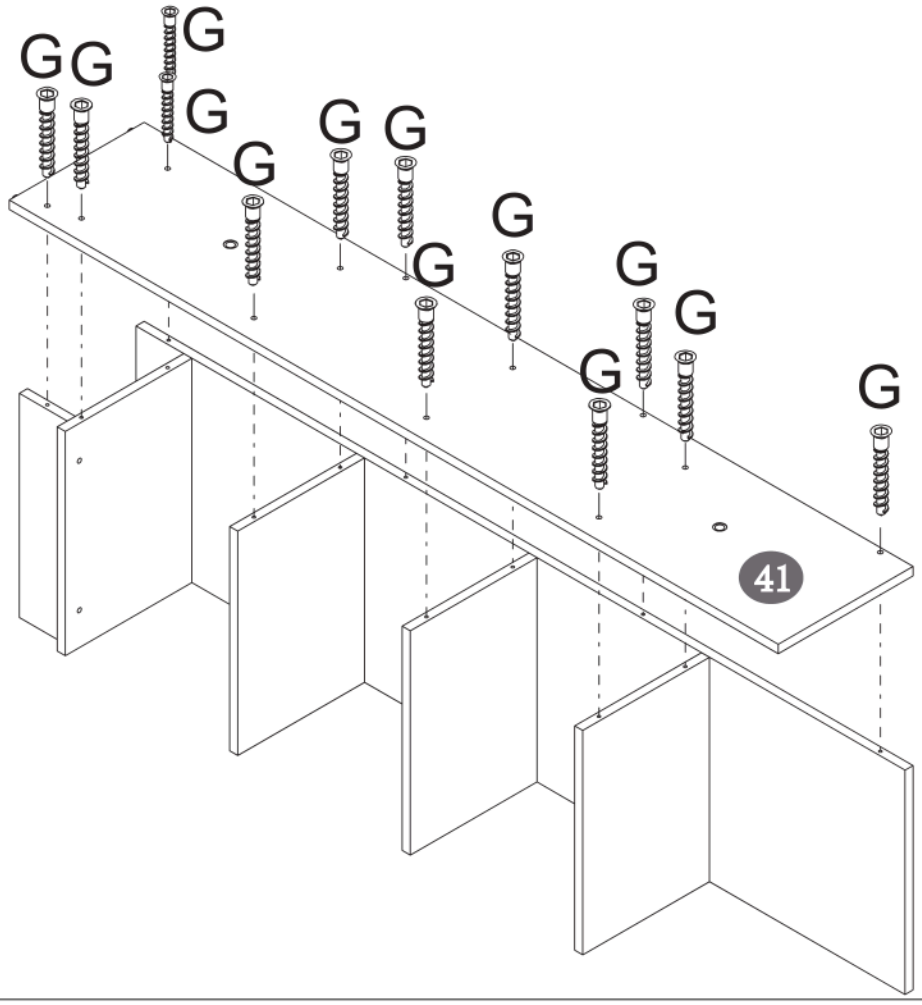

G	 M5x40	13pcs

33

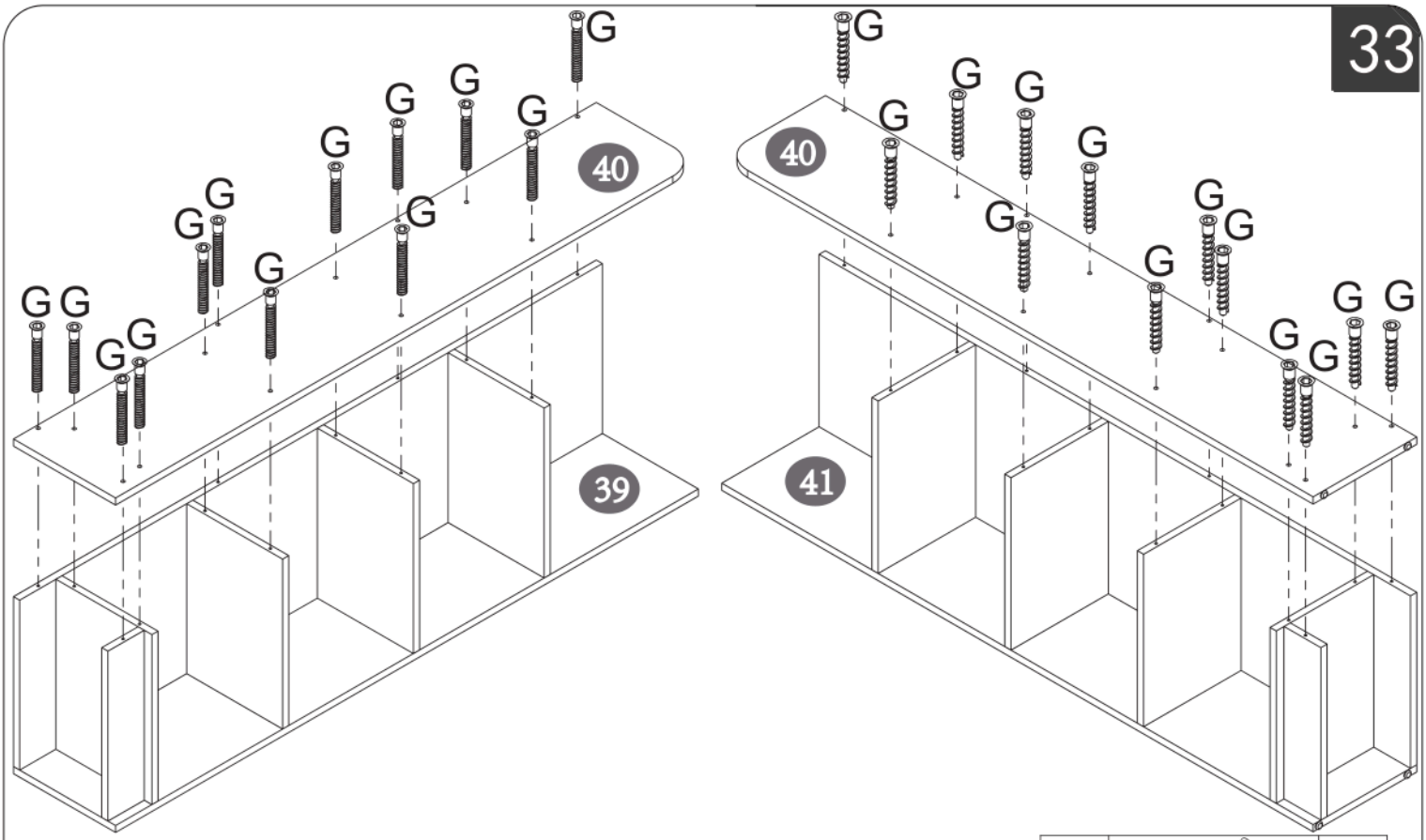

G	M5x40	26pcs

34

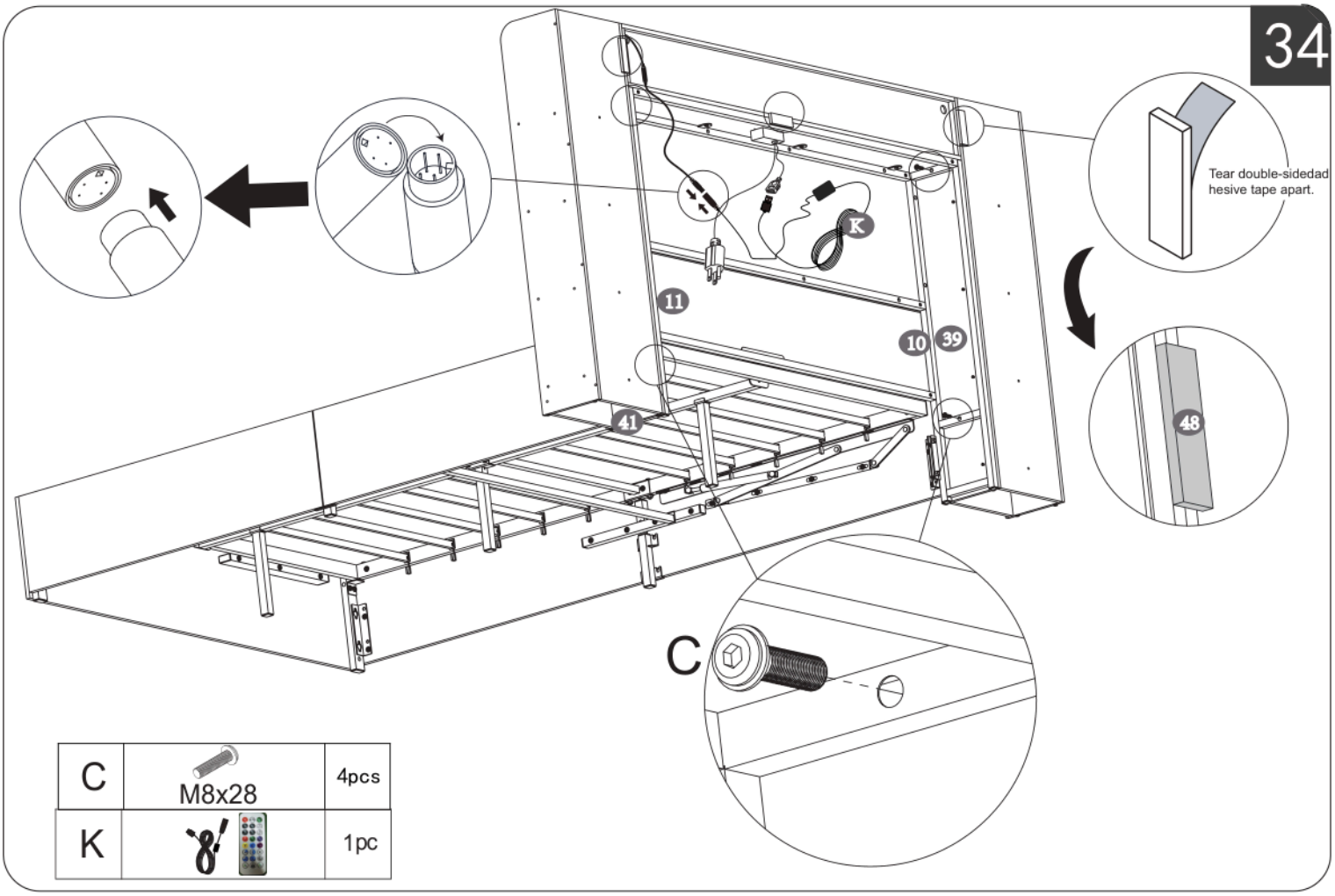

C	M8x28	4pcs
K		1pc

37

If you do not wish to use the storage cabinets on either side of the headboard, you can remove them by unscrewing the screws.

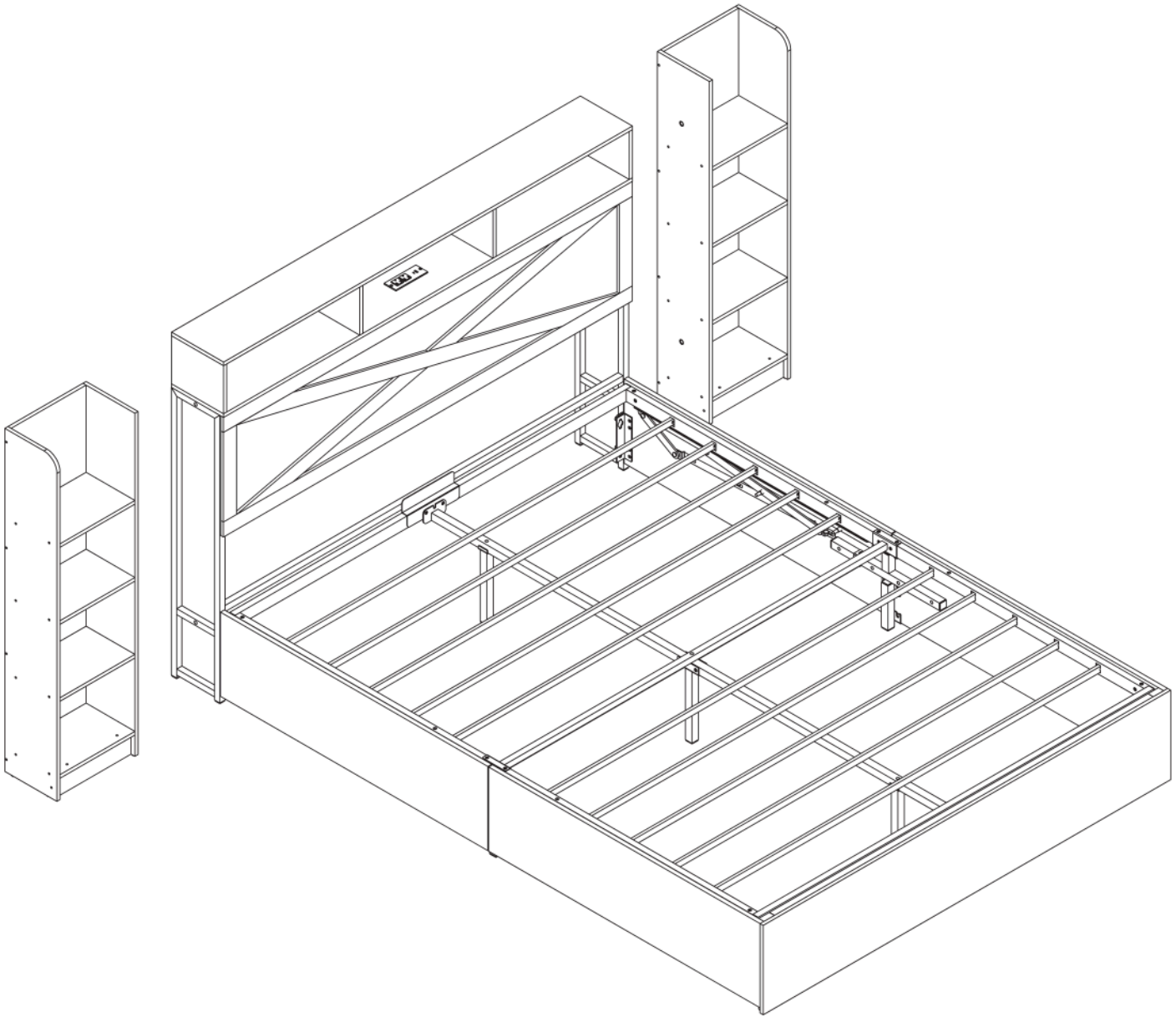



⚠ ·Make sure the assembly holes are aligned.
·TIGHTEN ALL THE SCREWS COMPLETELY.



Installation Complete

38

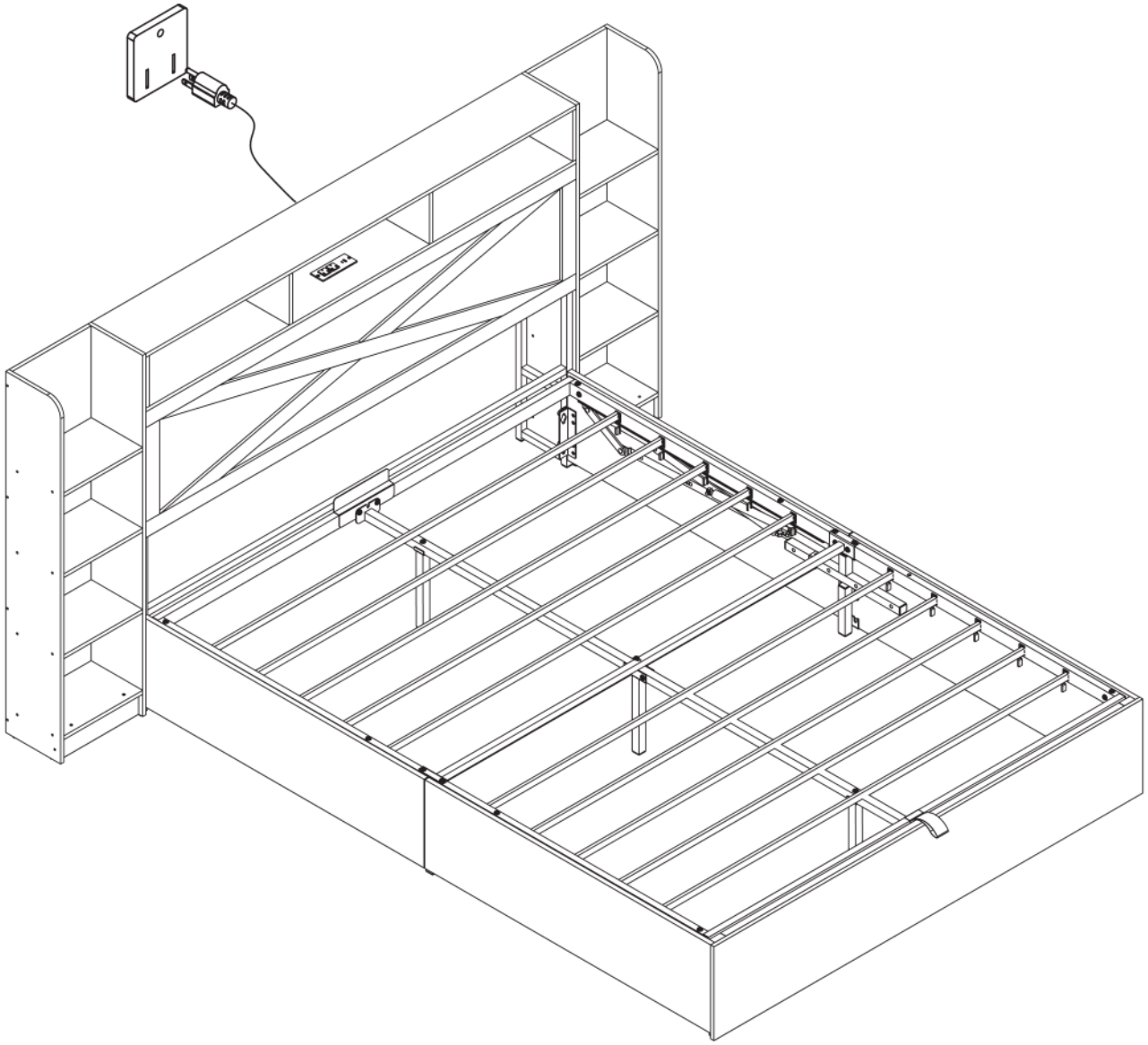



·Make sure the assembly holes are aligned.
·TIGHTEN ALL THE SCREWS COMPLETELY.

100%

Installation Complete