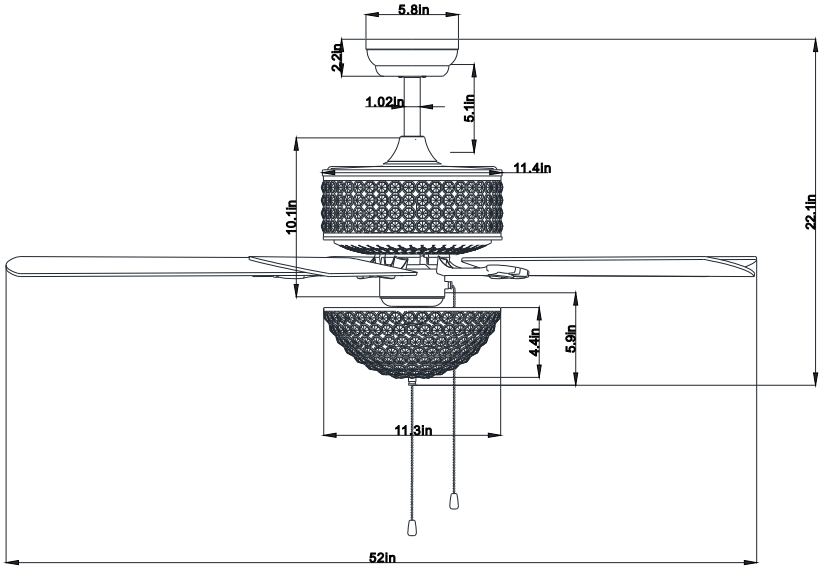
5.8in
2.2in
1.02in
5.1in
11.4in
10.1in
22.1in
4.4in
5.9in
11.3in
52in

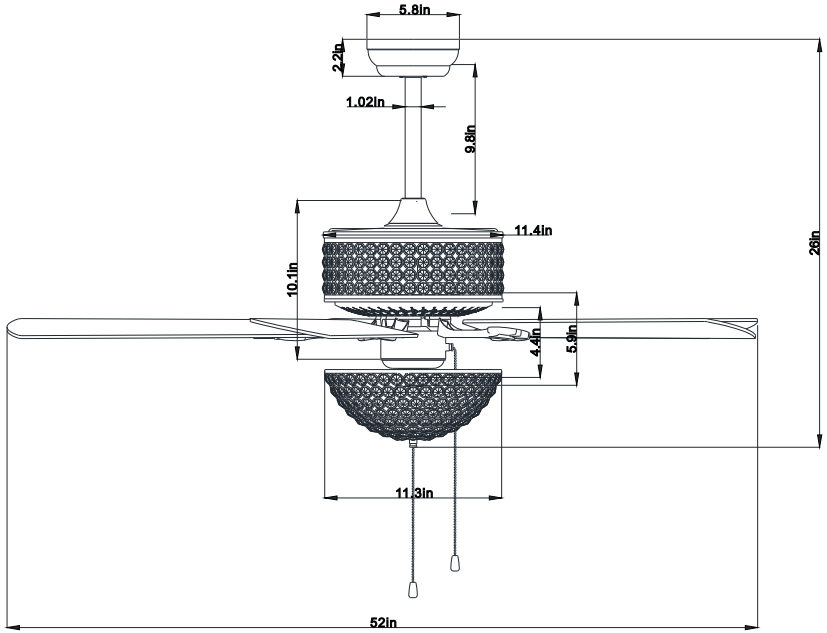
5.8in
2.2in
1.02in
9.8in
11.4in
10.1in
26in
4.4in
5.9in
11.3in
52in

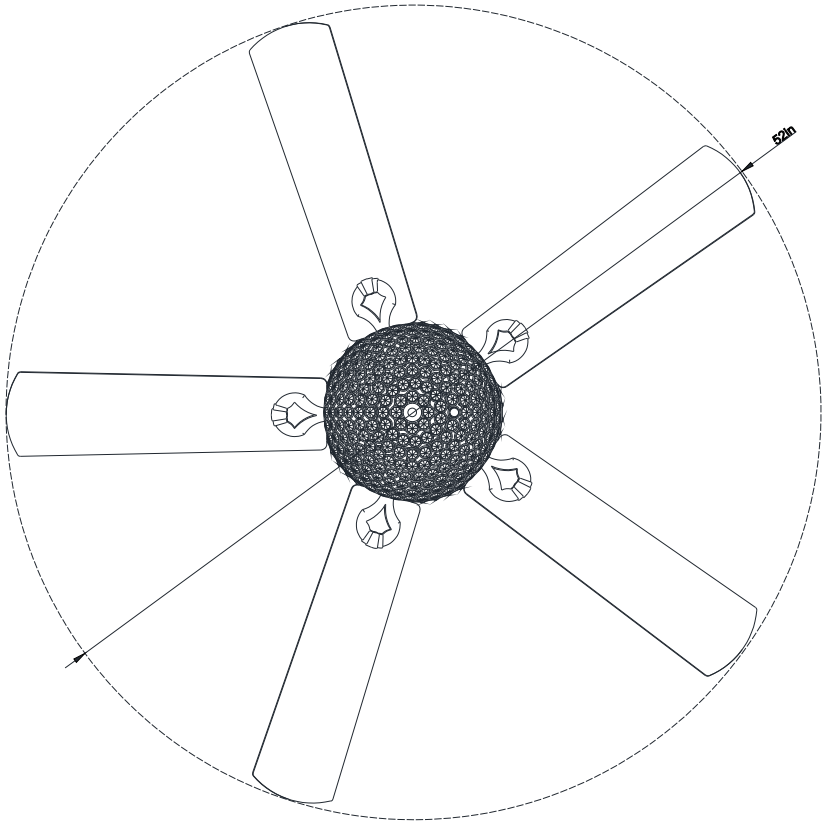
52in