INSTALLATION

Product Manual

Version: 750030US-01-26A-CXZ

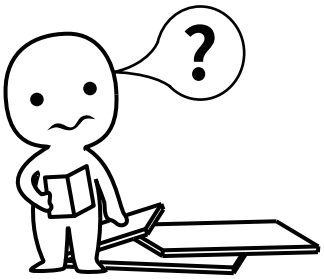

IMPORTANT INFORMATION!

please read the entire manual before starting to assemble and/or using this product.follow the manual thoroughly and keep it for further reference.

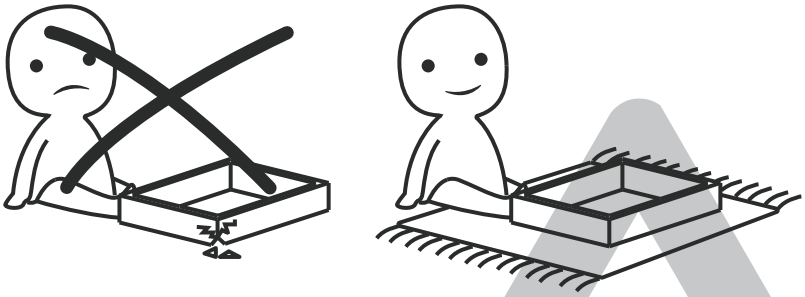

AVOID SCRATCHES!

In order to avoid scratching this furnuture should be assembled on a soft layer-could be a rug.

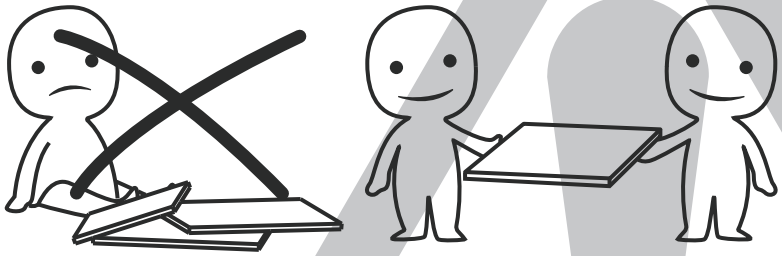

IMPROVE EFFICIENCY !

Try to find a partner to install with you, which can speed up the installation efficiency and shorten the time.

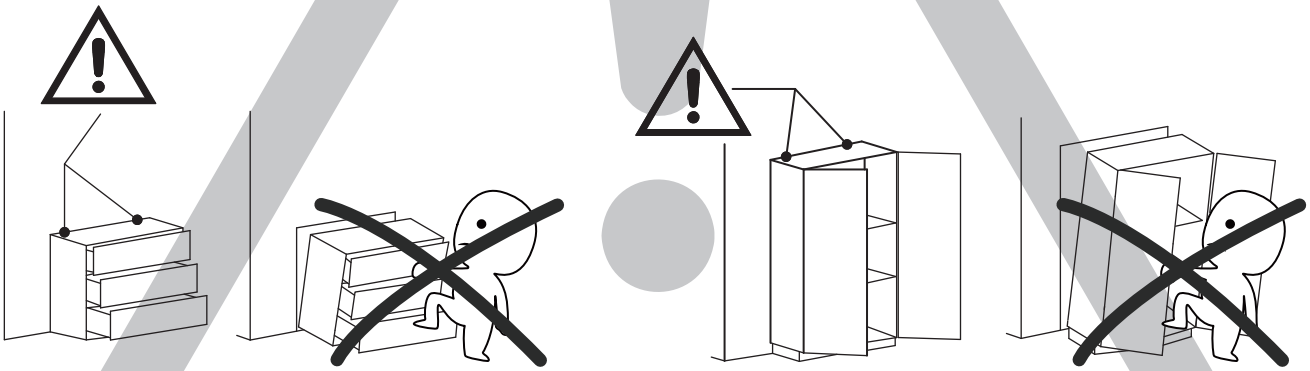

ANTI-TOPPLE WARNING !

Overturned furniture can cause serious or fatal crush injuries. To prevent tipping over, be sure to use the wall attachment, if not included with this product. Please purchase the wall attachment that fit your wall. If unsure, seek professional advice. Please read and follow each step of the instructions carefully.

IMPORTANT !

It is important that any product which is assembled using any kind of screw is re-tightened 2 weeks after assembly,and once every 3 months - in order to assure stability through-out the lifespan of the product.

For regular maintenance and cleaning of the product, for the frame, please use a rag dipped in neutral detergent to fully wipe it, and then dry it with a clean rag.For glass materials, wipe with a rag dampened with water glass cleaner, and then dry with a dry rag.

Do not use an electric screwdriver, and do not use too much force when installing, because the board is easy to break.

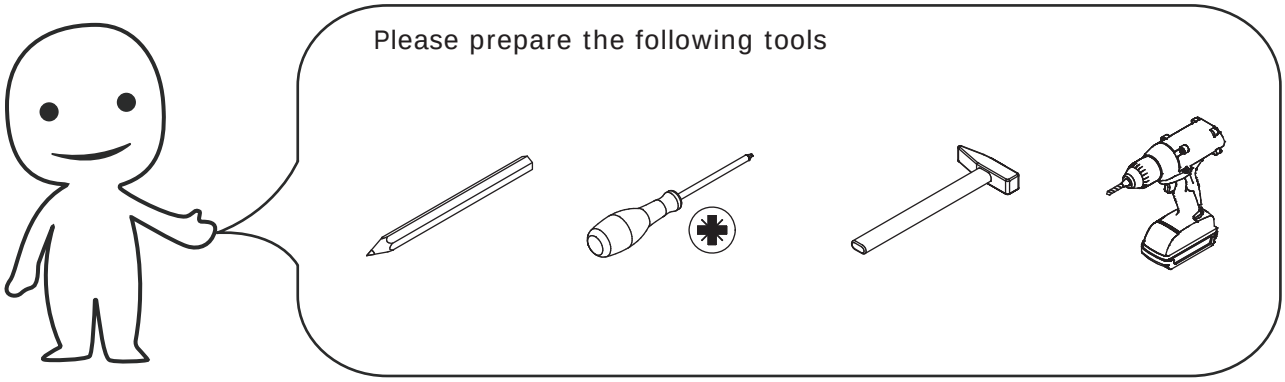

When installing, please carefully confirm whether each screw corresponds to the manual, accessories with similar shapes can be distinguished by size

A x 59	B x 59	C x 40	D x 37
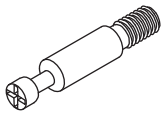	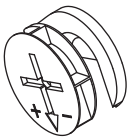	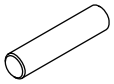	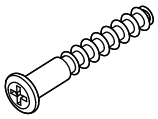
∅6 x 28 mm	∅12 x 10 mm	∅6 x 30 mm	M5 x 50 mm

E x 4	F x 18	G x 6	H x 2
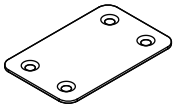		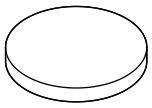	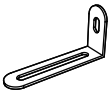
60 x 38 x 1 mm	∅3.5 x 12 mm	∅35 x 3 mm	32 x 65 x 15 mm

J x 2	K x 2
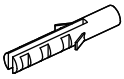	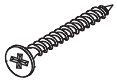
∅6 x 30 mm	∅3.5 x 30 mm

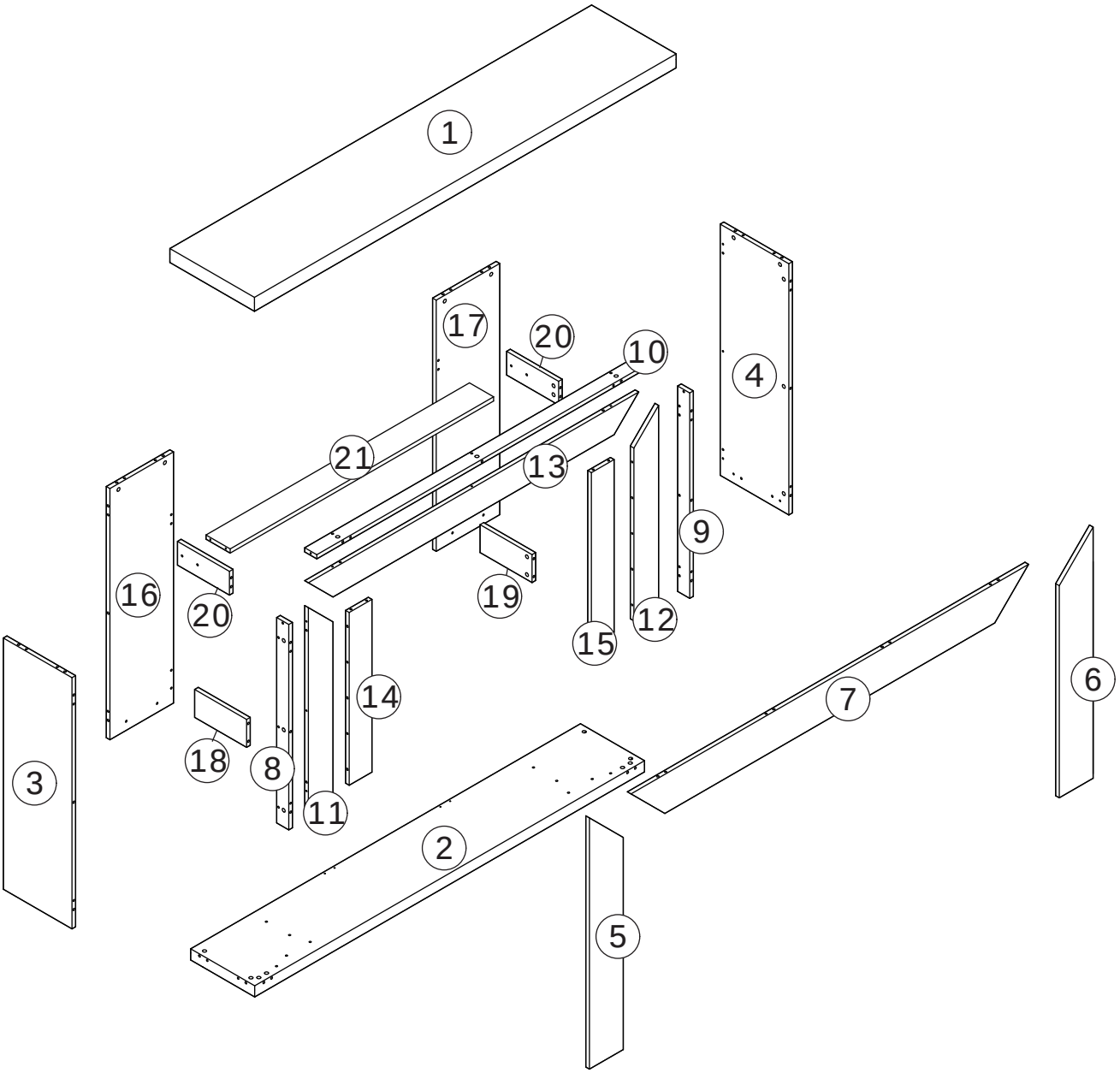

⚠WARNING

Children have died from furniture tipover.To reduce the risk of furniture tipover:

- ALWAYS install Anti-tip device provided.
- NEVER put a TV on this product.
- NEVER allow children to stand,climb or hang on drawers,doors,or shelves.
- NEVER open more than one drawer at a time.
- Place heaviest items in the lowest drawers.

This is a permanent label.
Do not remove!

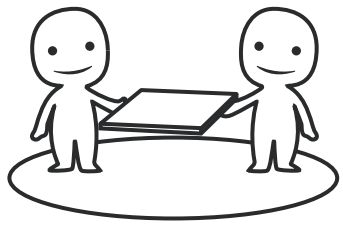

ASSEMBLED BY 2 ADULTS

1

A x 6

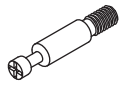

∅6 x 28 mm

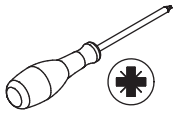

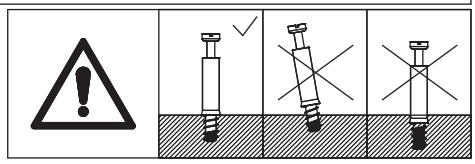

Screw eccentric bolt (A) onto Panels 11 and 12.

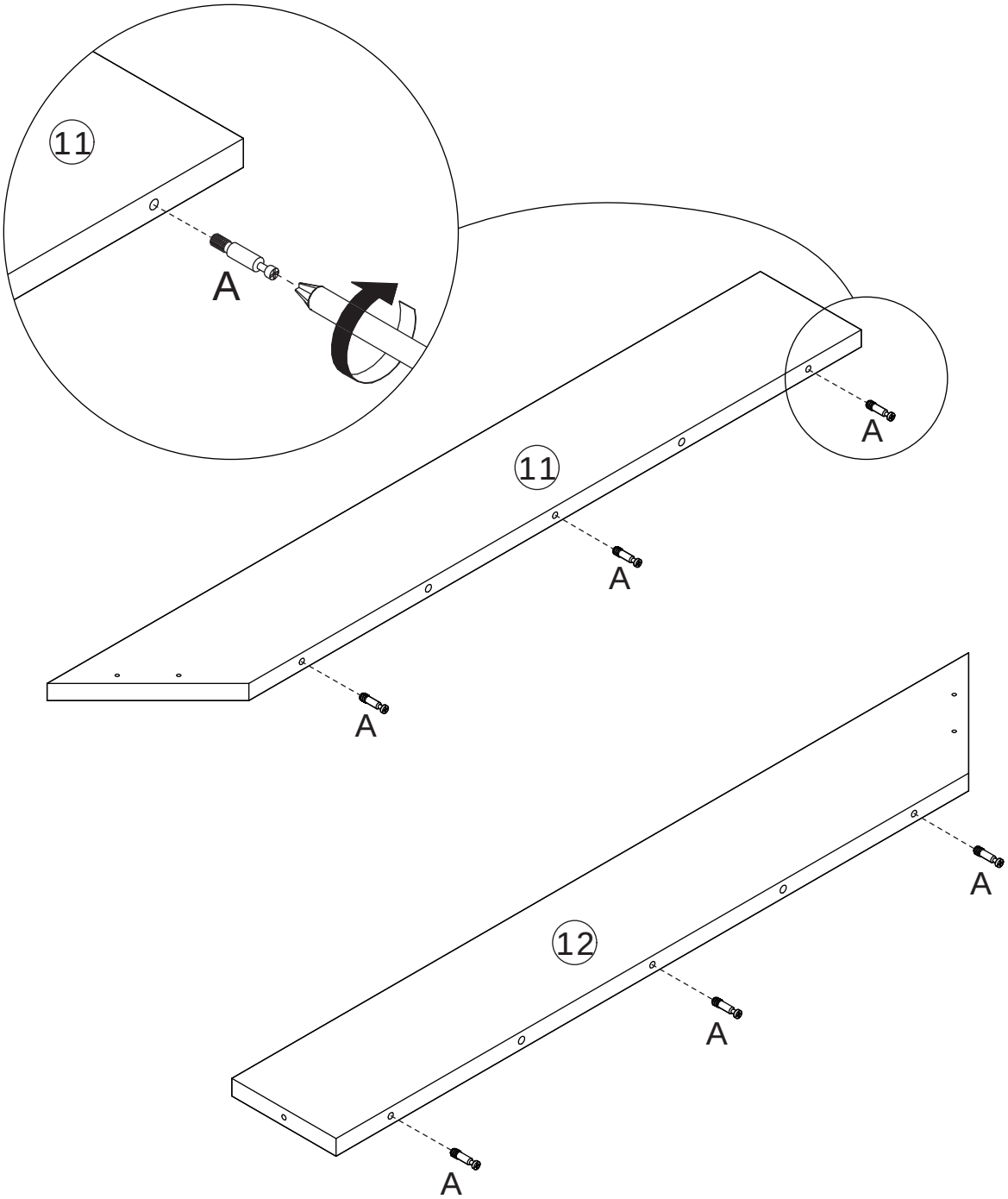

2

B x 3	C x 2	
		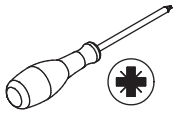
∅12 x 10 mm	∅6 x 30 mm	

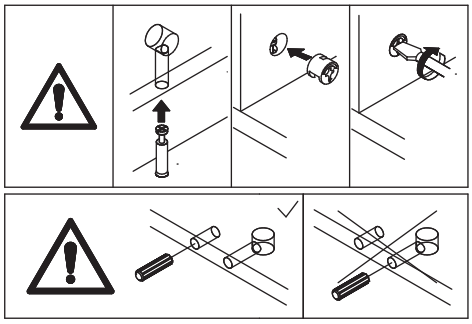

Connect Panel 14 to Panel 11 using dowel (C), then tighten by turning cam lock (B) clockwise.

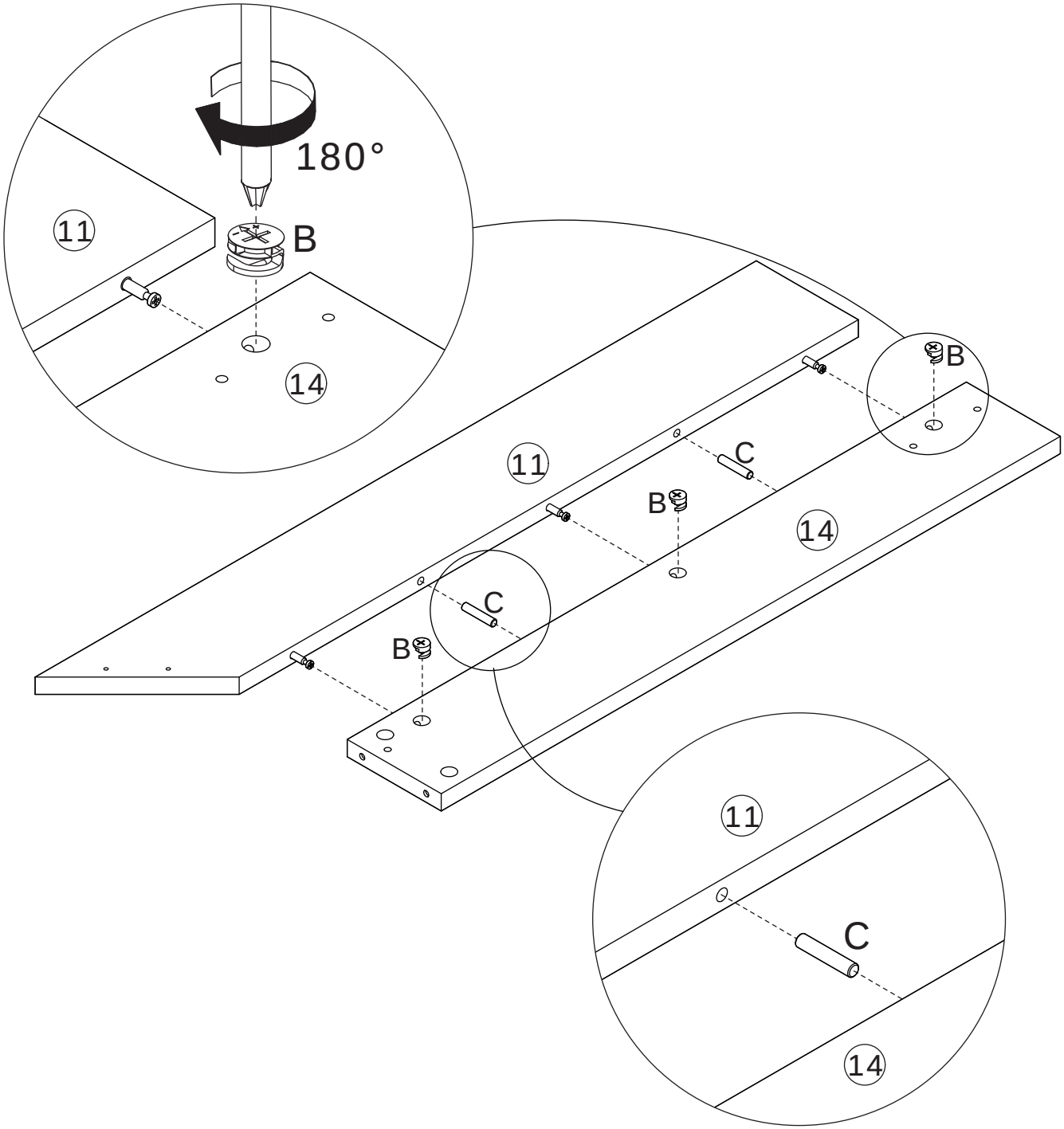

3

B x 3	C x 2	
		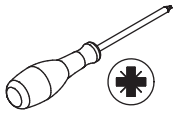
∅12 x 10 mm	∅6 x 30 mm	

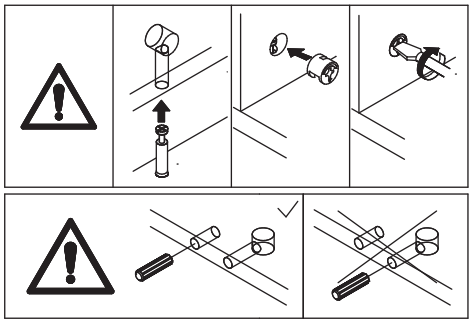

Connect Panel 15 to Panel 12 using dowel (C), then tighten by turning cam lock (B) clockwise.

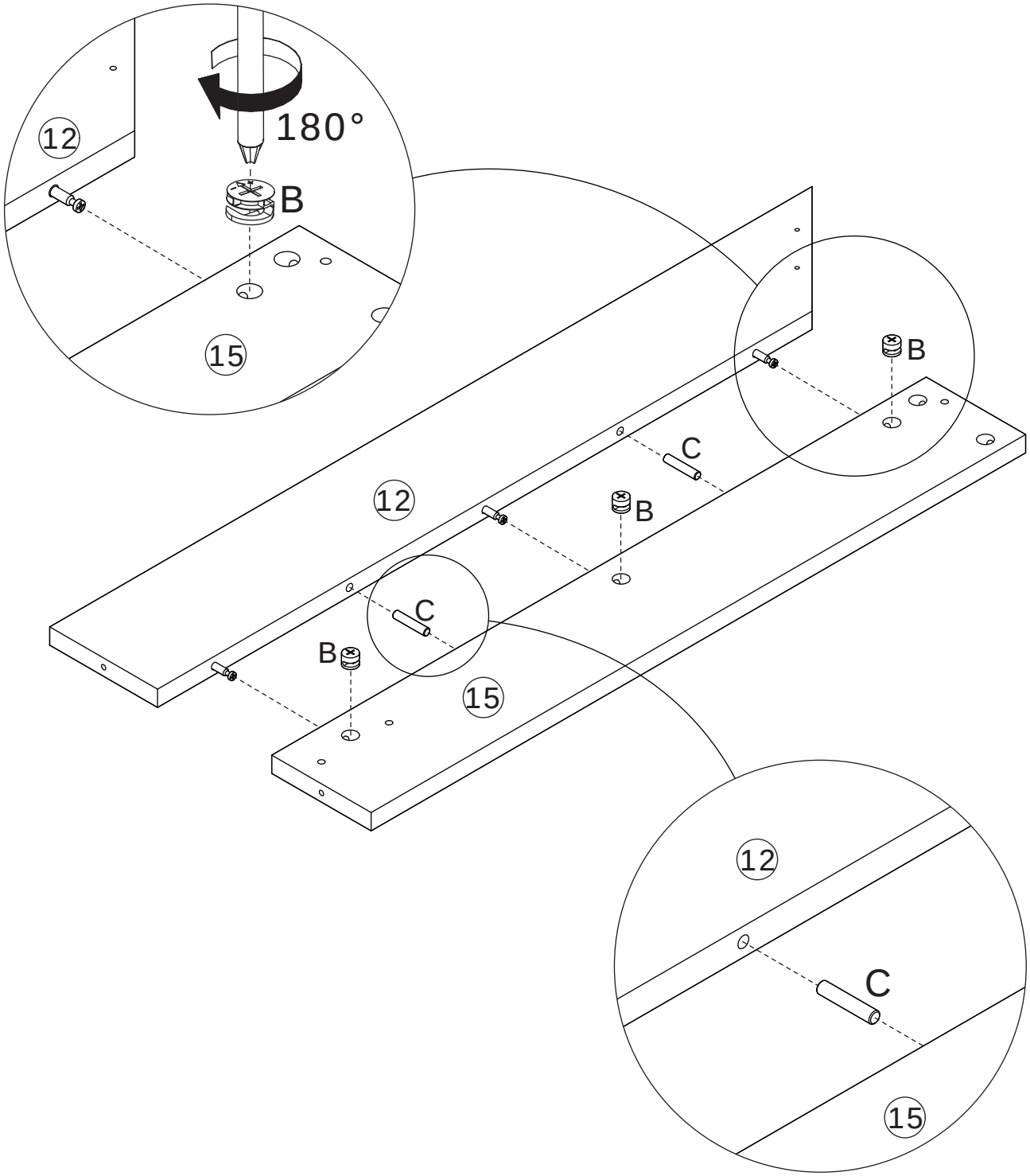

4

A x 4	B x 4	
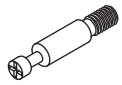		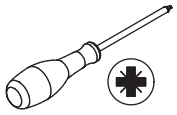
∅6 x 28 mm	∅12 x 10 mm	

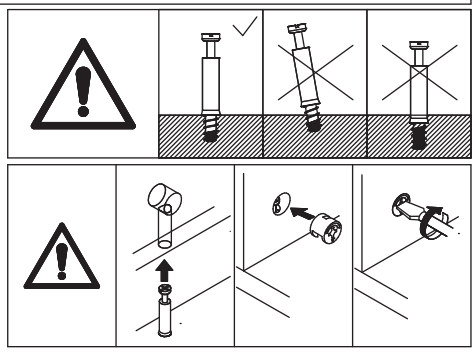

Screw eccentric bolt (A) onto Panel 13.
Connect Panel 13 to Panels 14 and 15, then tighten by turning cam lock (B) clockwise.

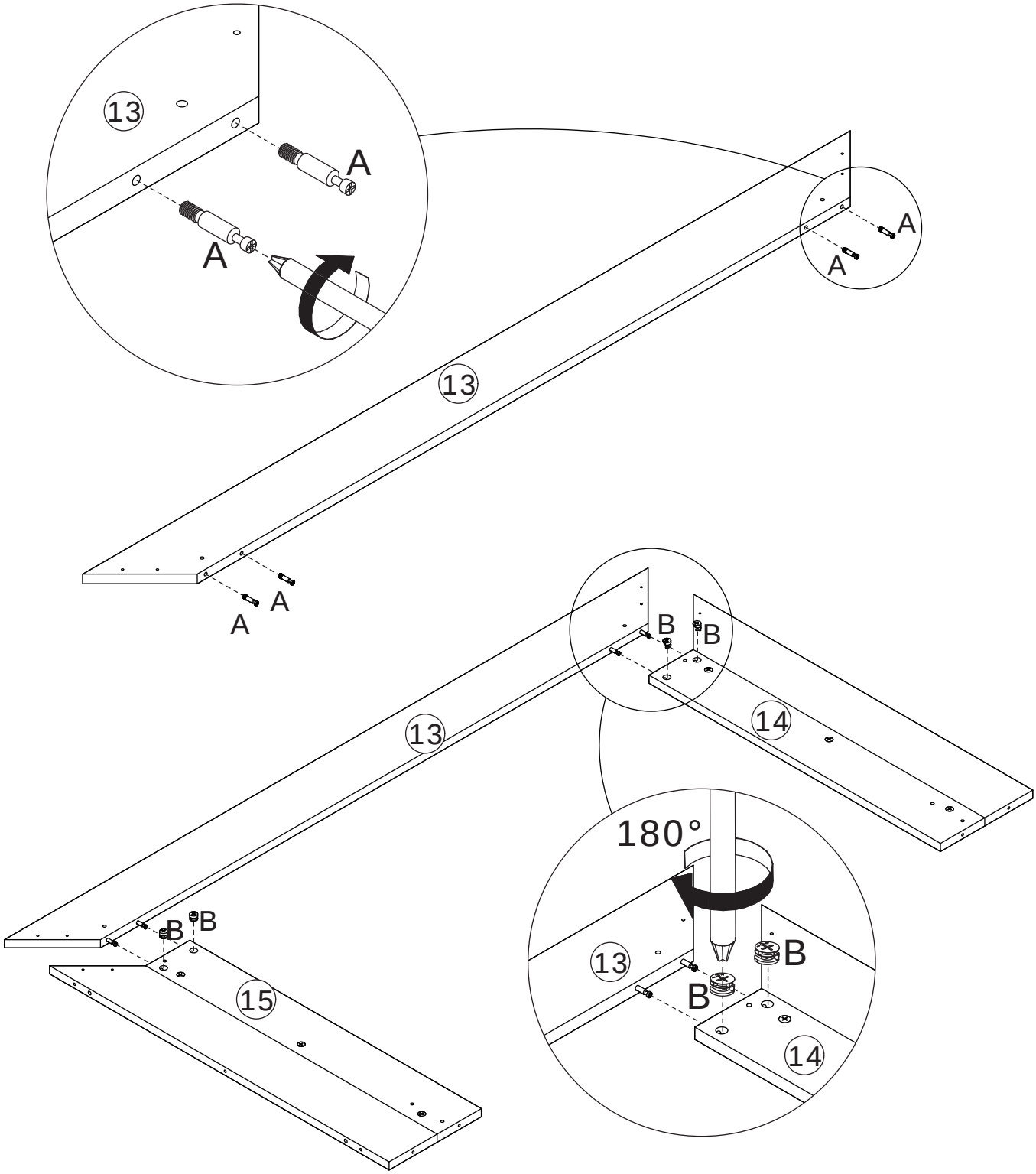

5

E x 2	F x 8	
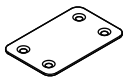		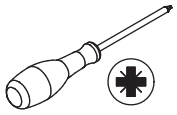
60 x 38 x 1 mm	∅3.5 x 12 mm	

Secure iron plate (E) to Panels 11, 12 and 13 using screw (F).

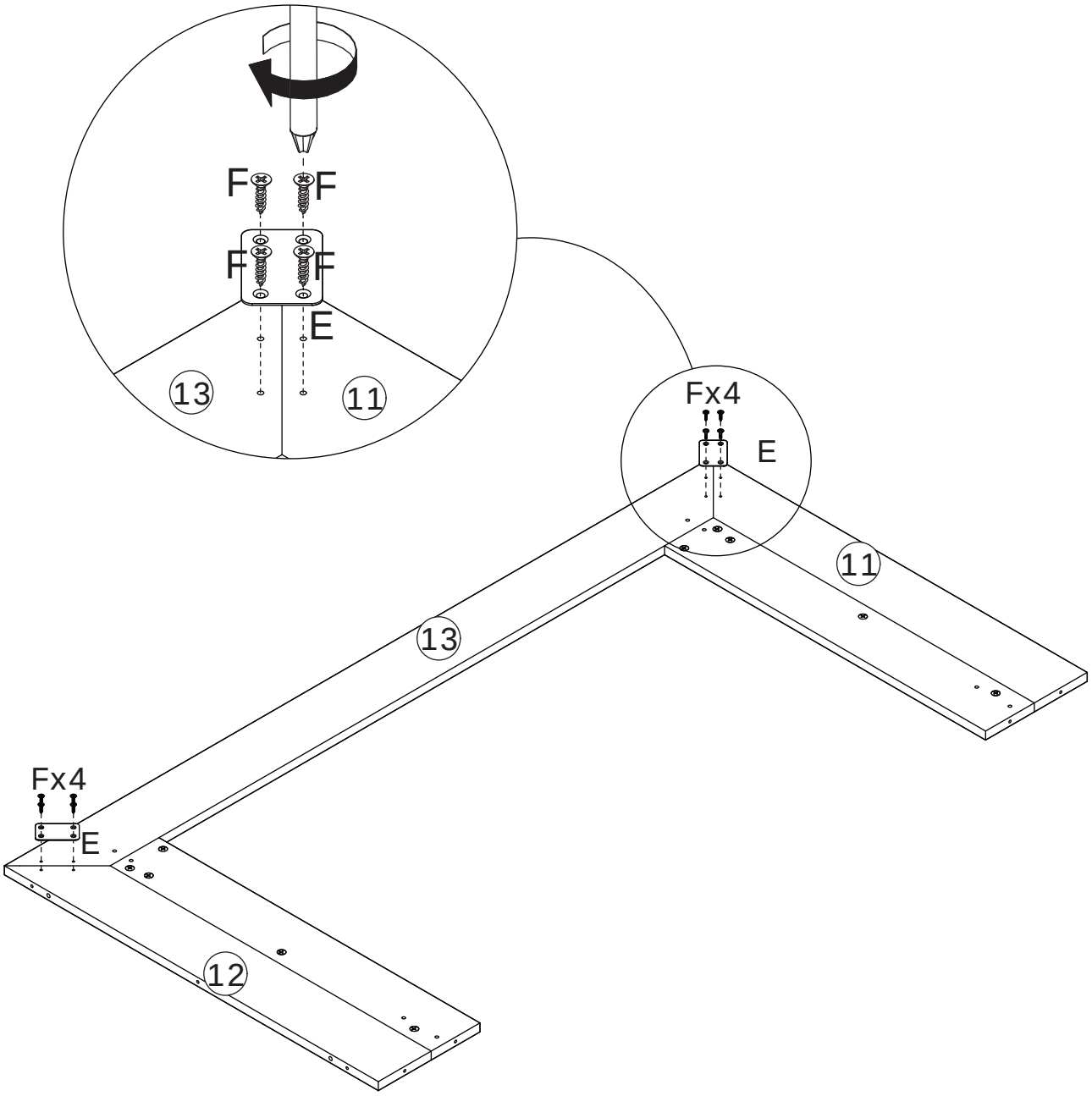

6

C x 2	D x 3	
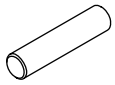	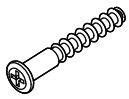	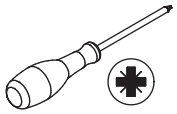
∅6 x 30 mm	M5 x 50 mm	

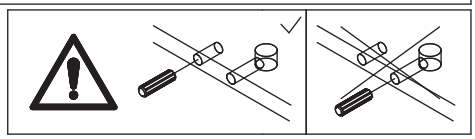

Connect Panel 10 to Panel 13 using dowel (C), then secure with screw (D).

7

C x 4	D x 8	
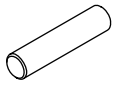	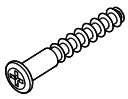	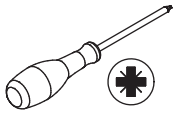
∅6 x 30 mm	M5 x 50 mm	

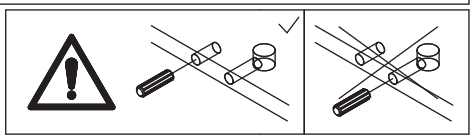

Connect Panels 8 and 9 to Panels 11 and 12 respectively using dowel (C), then secure with screw (D).

8

A x 9	E x 2	F x 8	
∅6 x 28 mm	60 x 38 x 1 mm	∅3.5 x 12 mm	

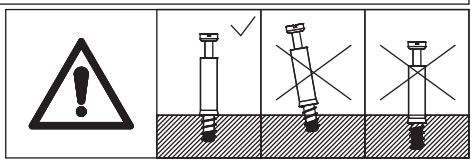

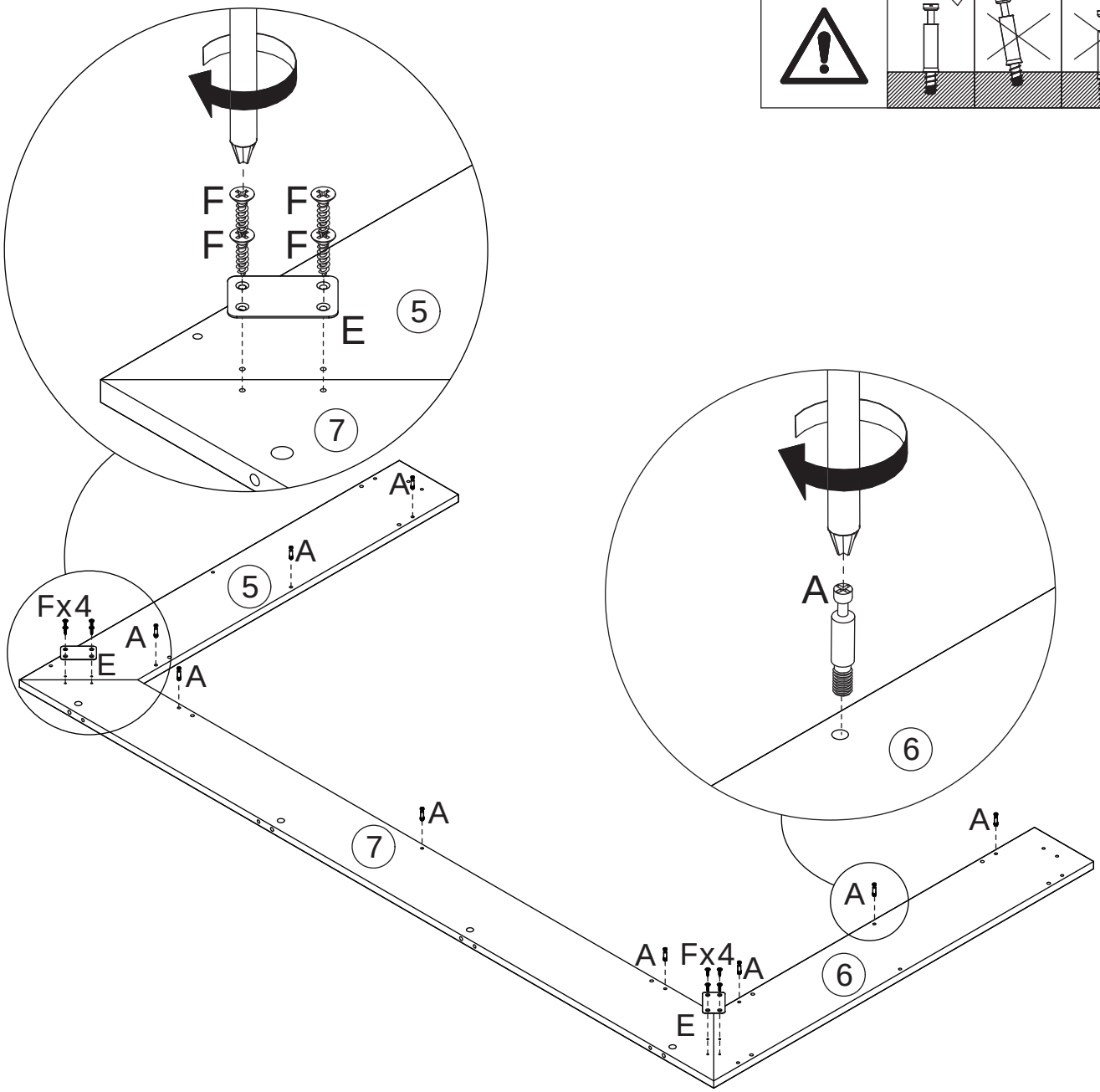

Screw eccentric bolt (A) onto Panels 5, 6 and 7.
Secure iron plate (E) to Panels 5, 6 and 7 using screw (F).

9

B x 9	C x 6	
		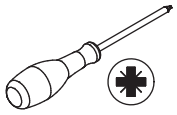
∅12 x 10 mm	∅6 x 30 mm	

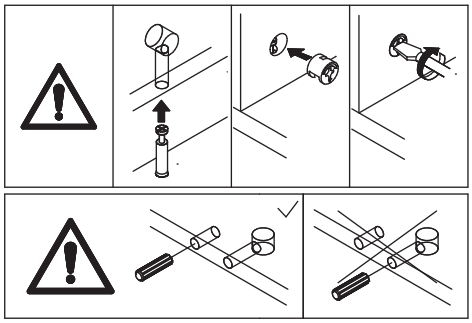

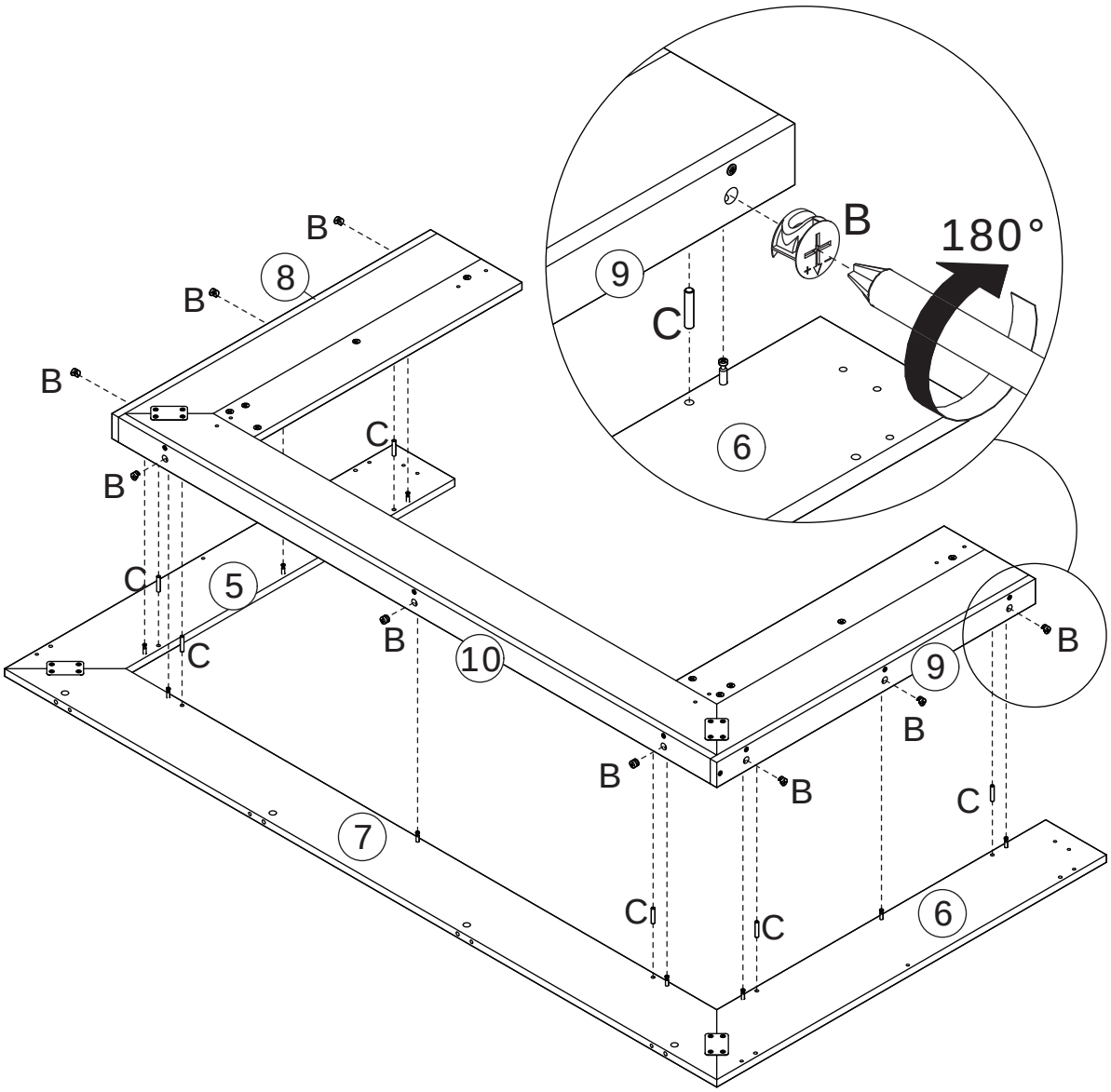

Connect Panels 8, 9 and 10 to Panels 5, 6 and 7 using dowel (C), then tighten by turning cam lock (B) clockwise.

10

A x 18

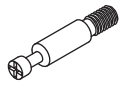

∅6 x 28 mm

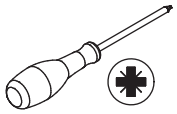

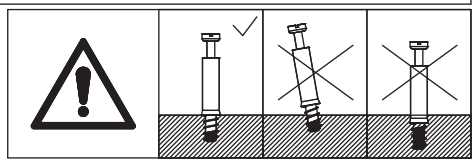

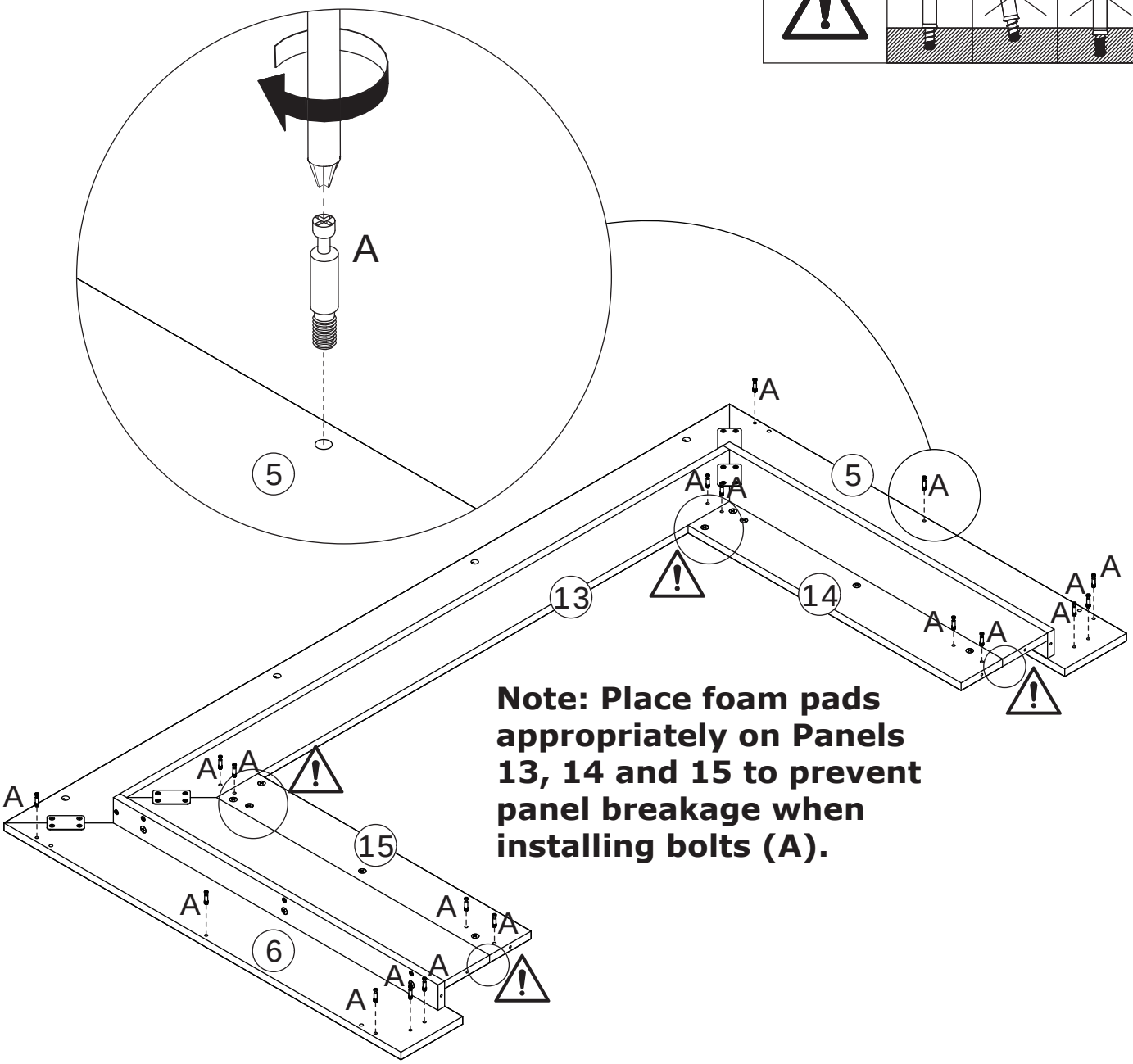

Note: Place foam pads appropriately on Panels 13, 14 and 15 to prevent panel breakage when installing bolts (A).

Screw eccentric bolt (A) onto Panels 5, 6, 13, 14 and 15.

11

A x 10

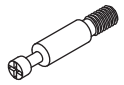

∅6 x 28 mm

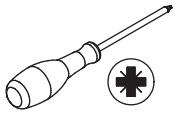

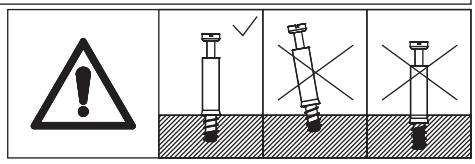

Screw eccentric bolt (A) onto Panels 3 and 4.

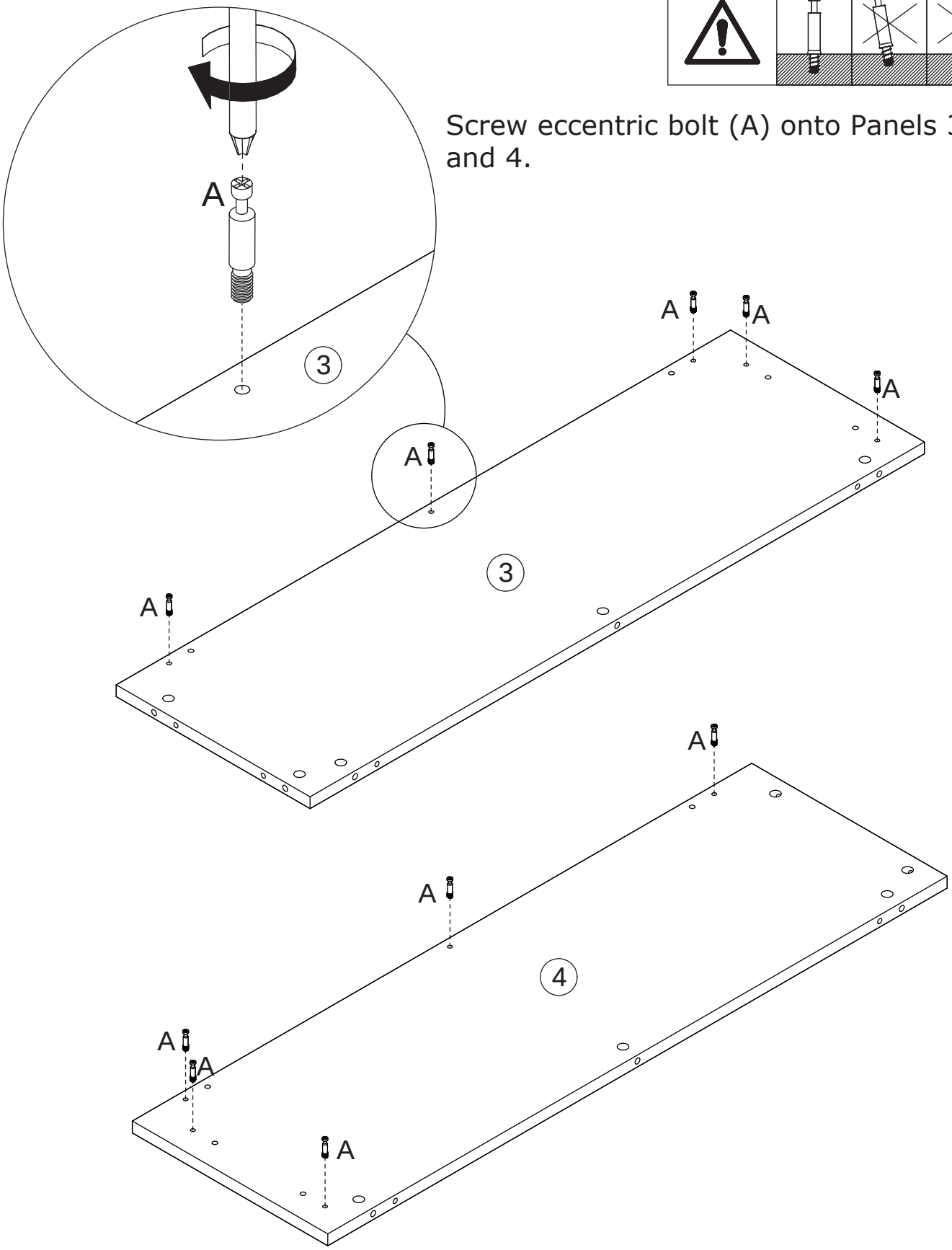

12

B x 4	C x 4	
		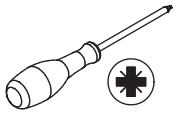
∅12 x 10 mm	∅6 x 30 mm	

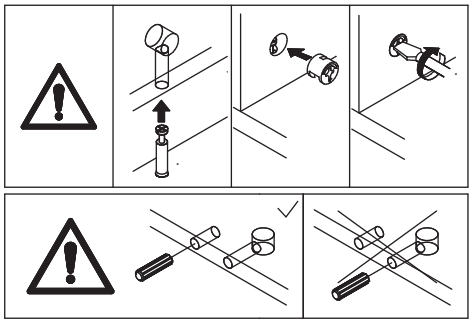

Connect Panels 3 and 4 to Panel 2 using dowel (C), then tighten by turning cam lock (B) clockwise.

13

B x 10	C x 4	
		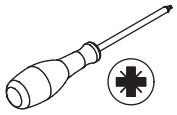
∅12 x 10 mm	∅6 x 30 mm	

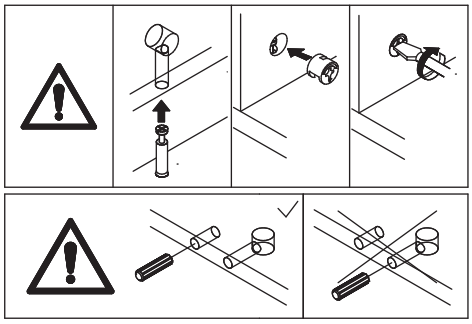

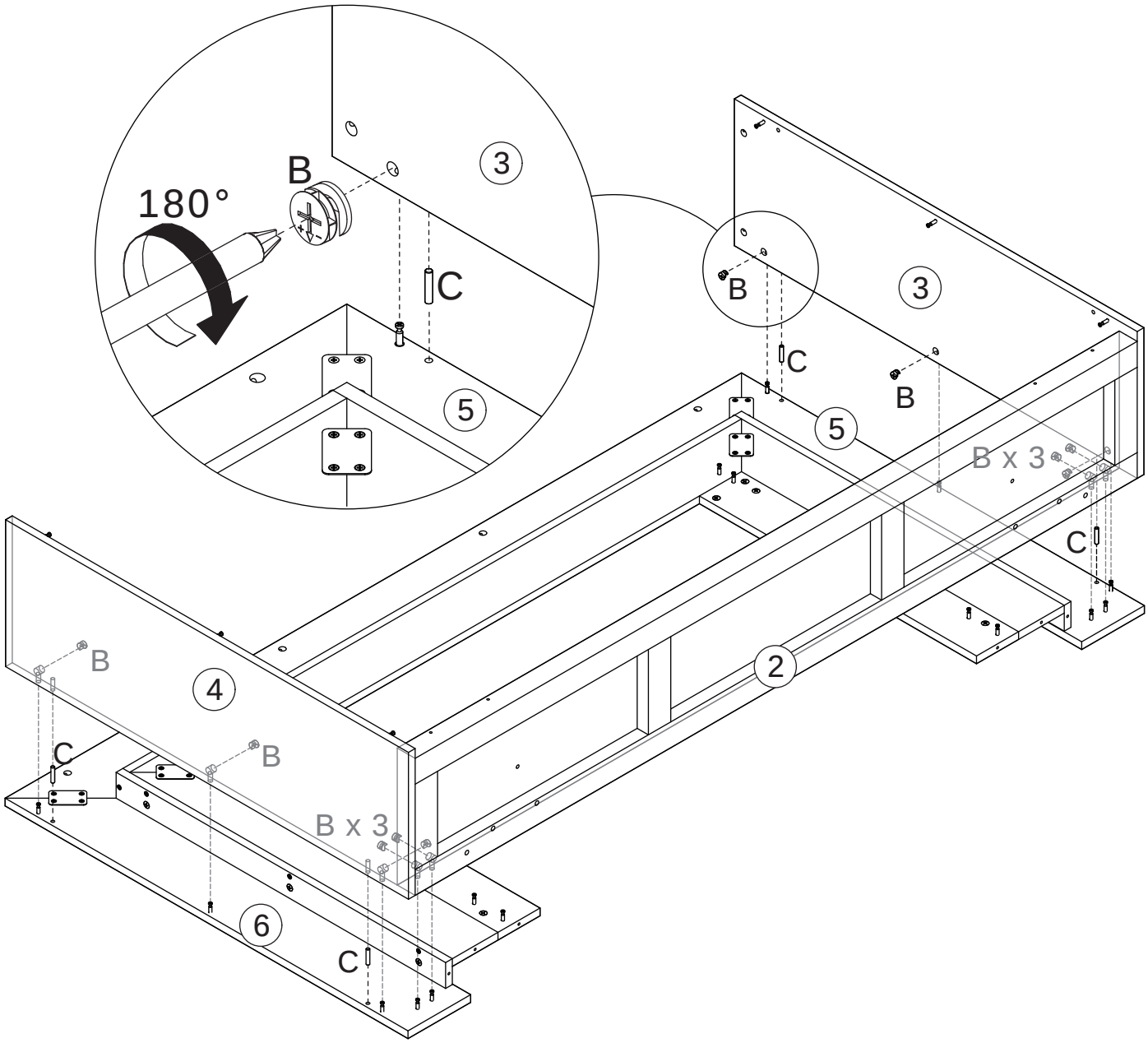

Connect Panels 2, 3 and 4 to Panels 5 and 6 using dowel (C), then tighten by turning cam lock (B) clockwise.

14

B x 4

∅12 x 10 mm

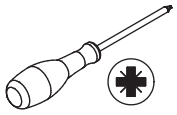

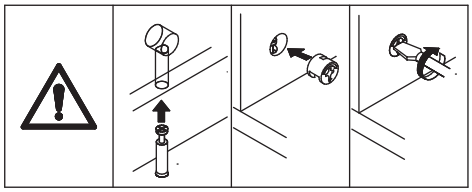

Connect Panels 18 and 19 to Panels 14 and 15 respectively, then tighten by turning cam lock (B) clockwise.

15

D x 10

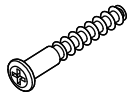

M5 x 50 mm

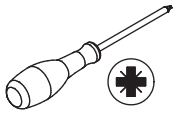

Secure Panel 2 to the combined unit using screw (D).

16

D x 4

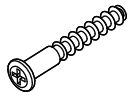

M5 x 50 mm

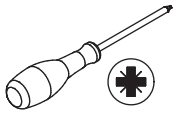

Secure Panel 20 to Panel 21 using screw (D).

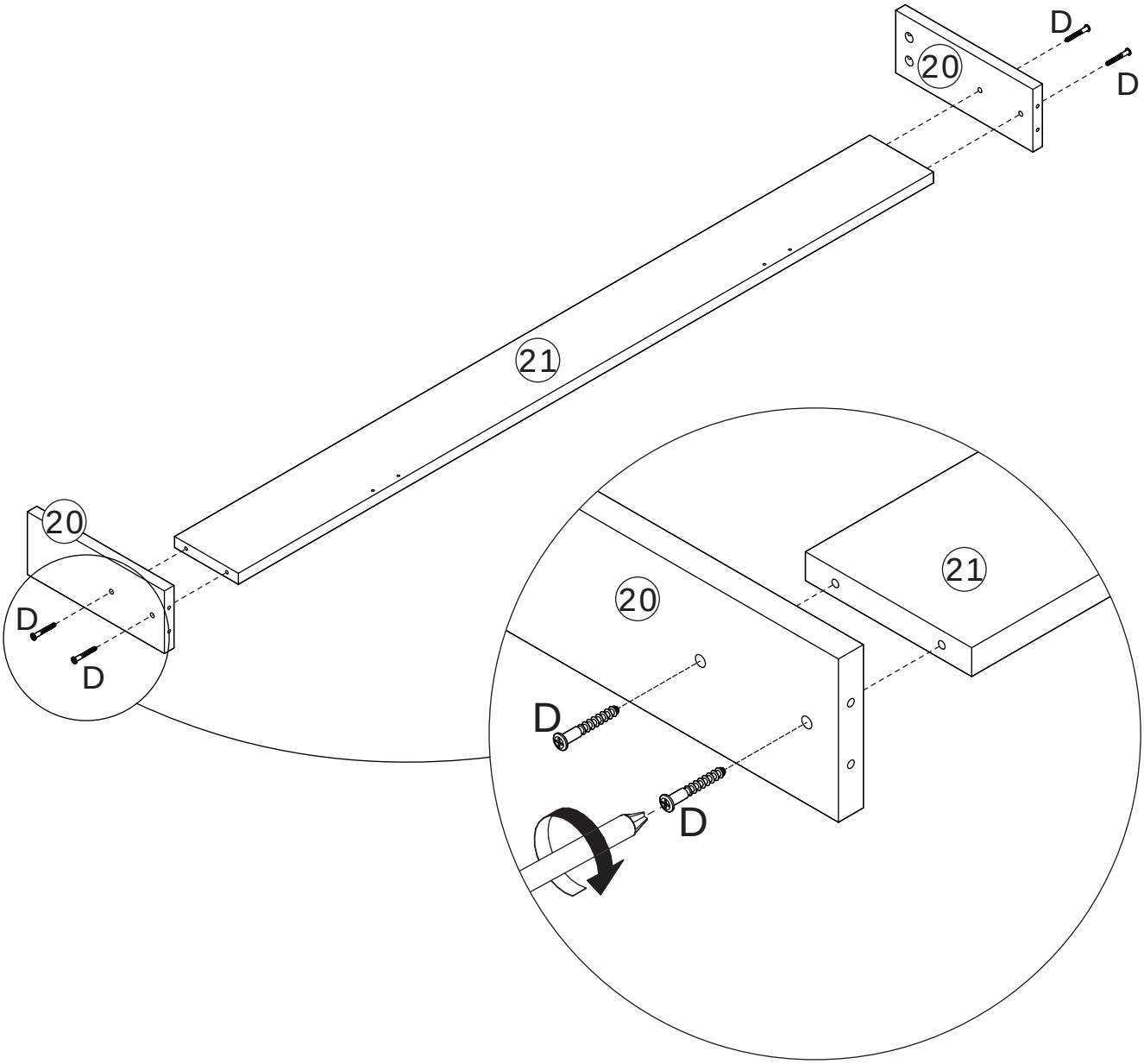

17

B x 4

∅12 x 10 mm

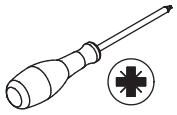

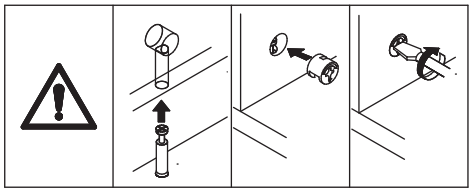

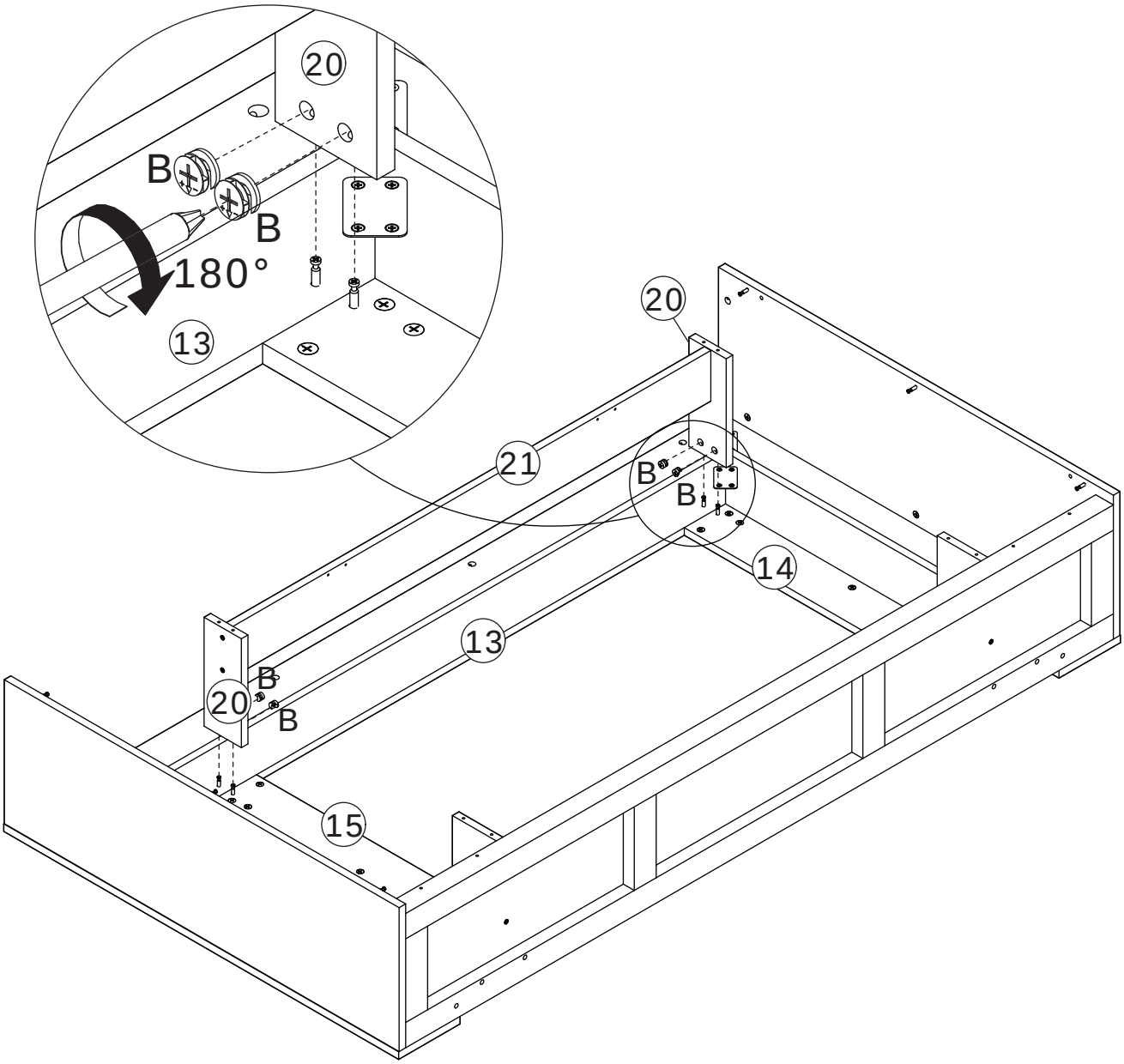

Connect Panel 20 to Panels 14 and 15, then tighten by turning cam lock (B) clockwise.

18

B x 6	C x 4	
		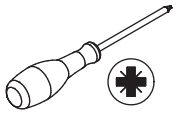
∅12 x 10 mm	∅6 x 30 mm	

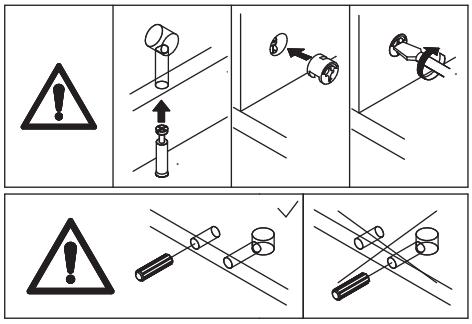

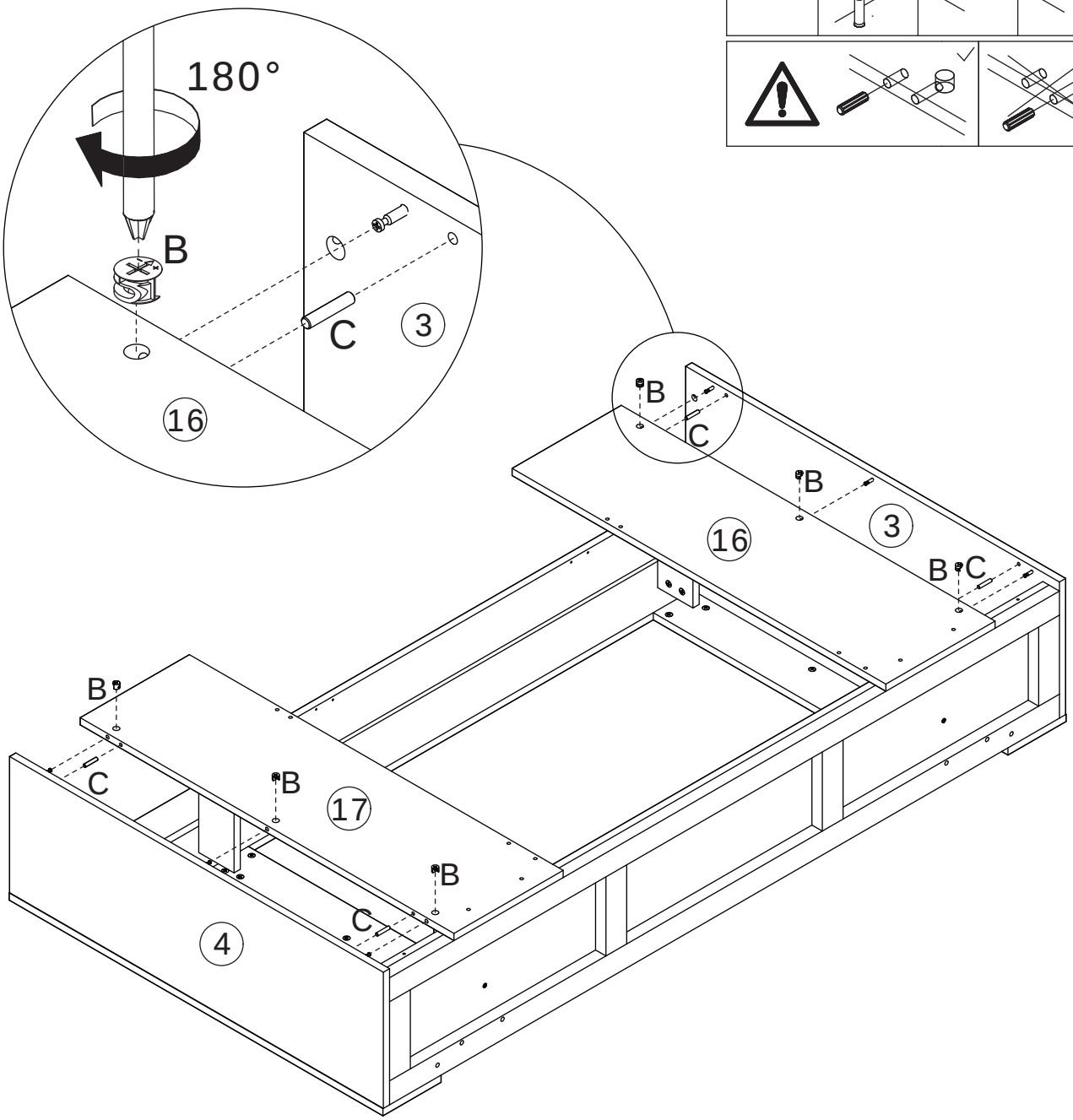

Connect Panels 16 and 17 to Panels 3 and 4 using dowel (C), then tighten by turning cam lock (B) clockwise.

19

D x 12

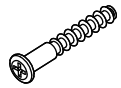

M5 x 50 mm

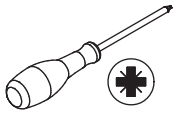

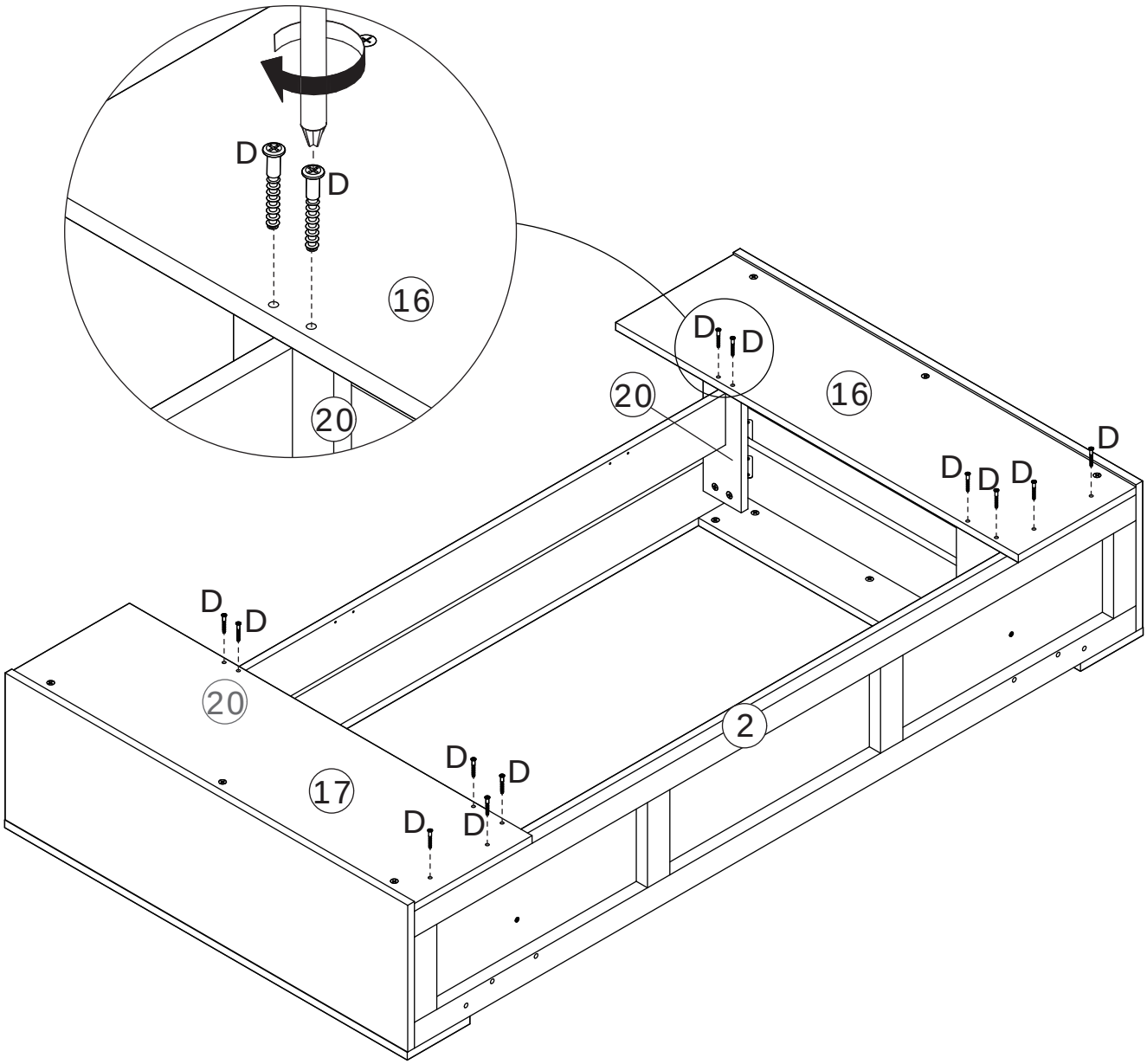

Secure Panels 16 and 17 to the combined unit using screw (D).

20

G x 6

∅25 x 3 mm

First peel off the adhesive backing of the foot pad (G), then stick them onto Panel 2.

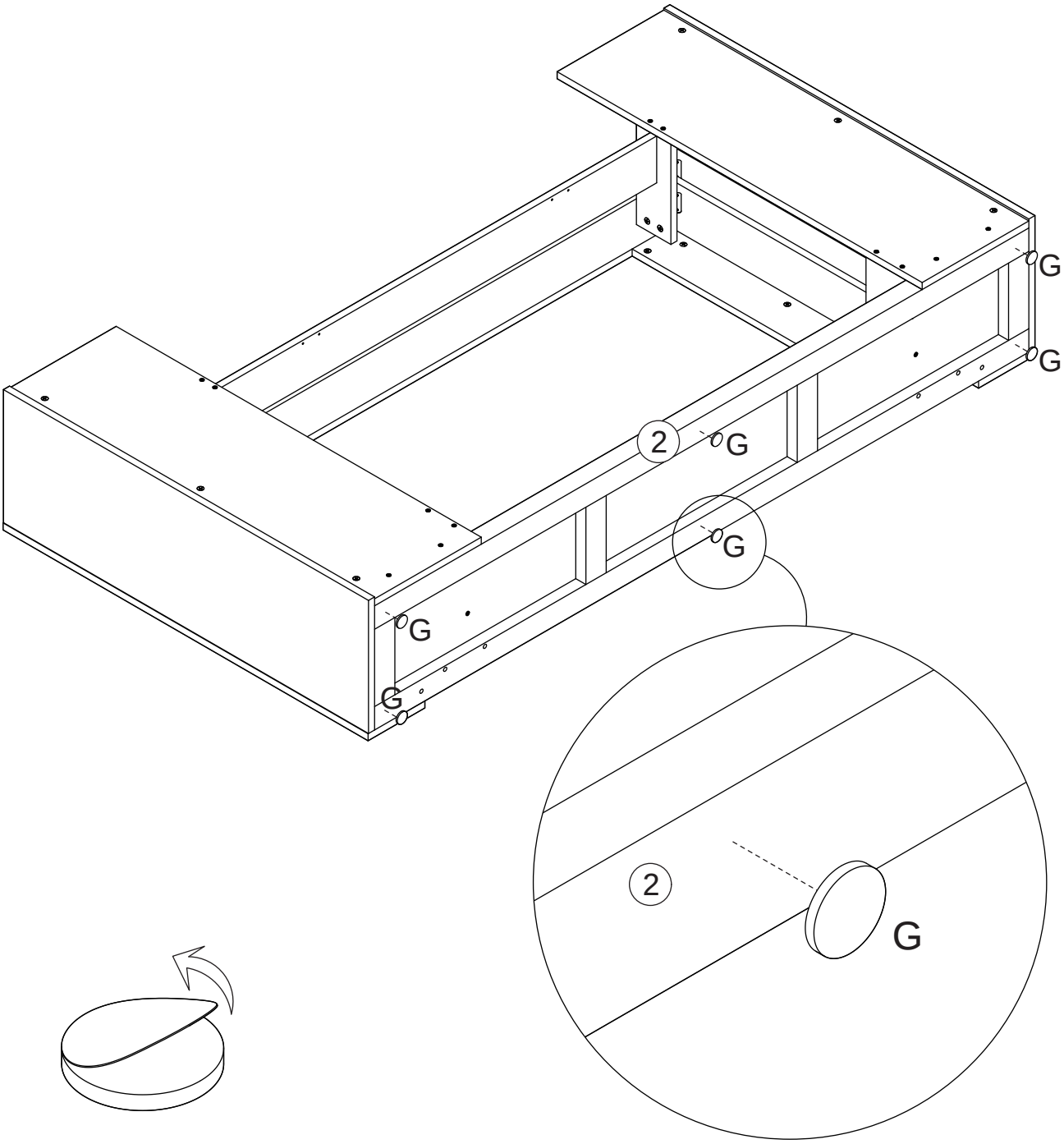

21

A x 12	F x 2	H x 2	
∅6 x 28 mm	∅3.5 x 12 mm	32 x 65 x 15 mm	

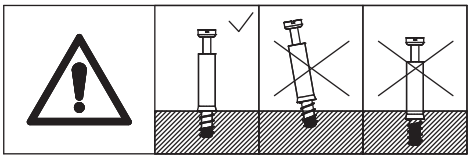

Screw eccentric bolt (A) onto Panel 1.
Secure bracket (H) to Panel 1 using screw (F).

22

B x 12	C x 12	
		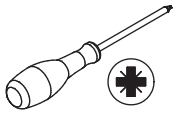
∅12 x 10 mm	∅6 x 30 mm	

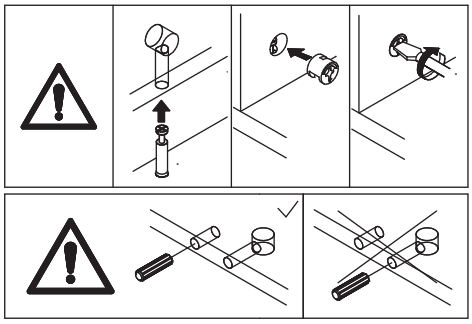

Connect Panel 1 to the combined unit using dowel (C), then tighten by turning cam lock (B) clockwise.

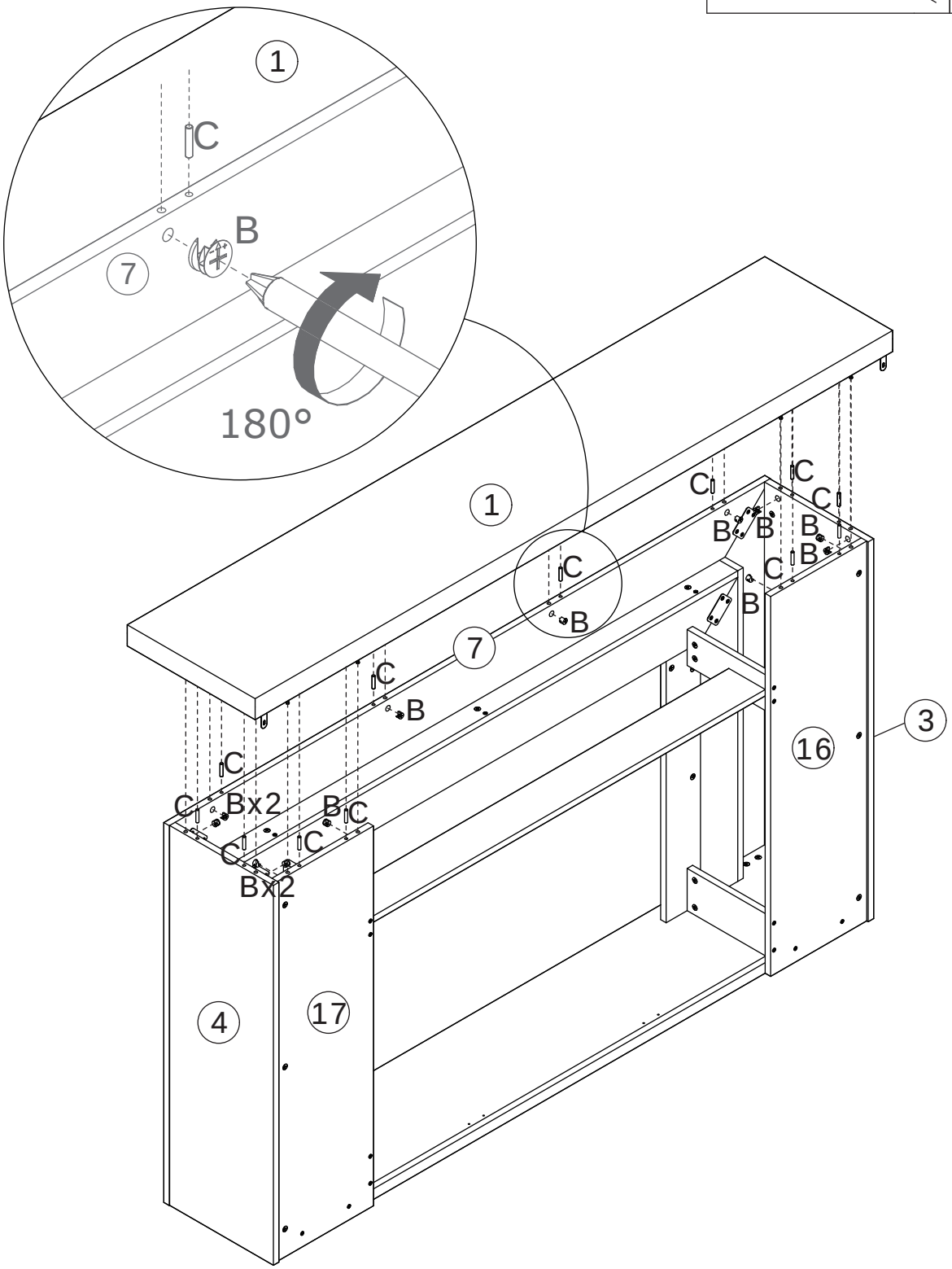

23

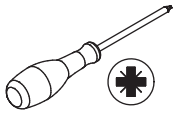

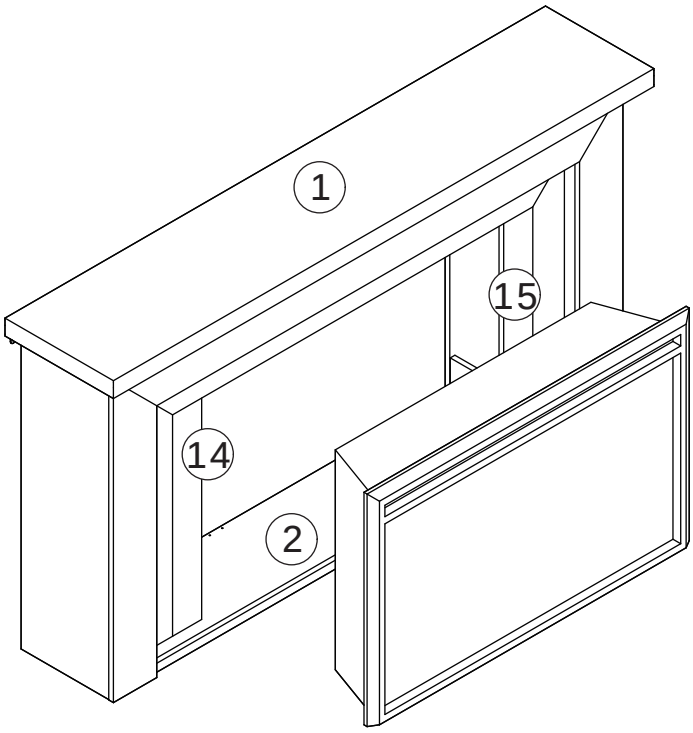

Install the fireplace into the cabinet following the steps below:

1. Two people should carefully lift the fireplace together and place it through the front opening of the cabinet.
2. Use the supplied screws and connecting brackets to connect and secure the fireplace to the cabinet from the rear.

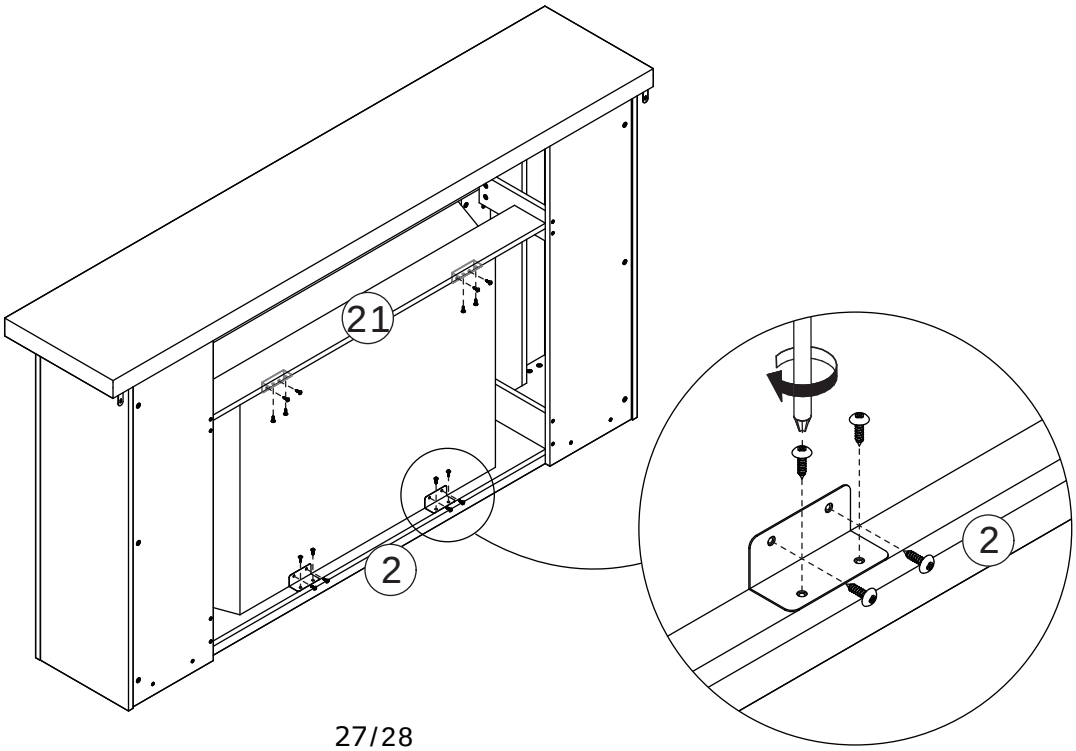

24

J x 2	K x 2	
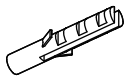	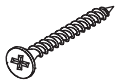	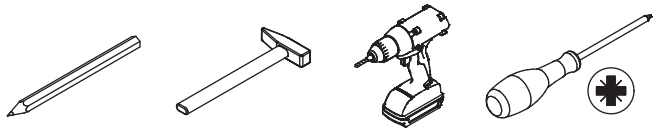
∅6 x 30 mm	∅3.5 x 30 mm	

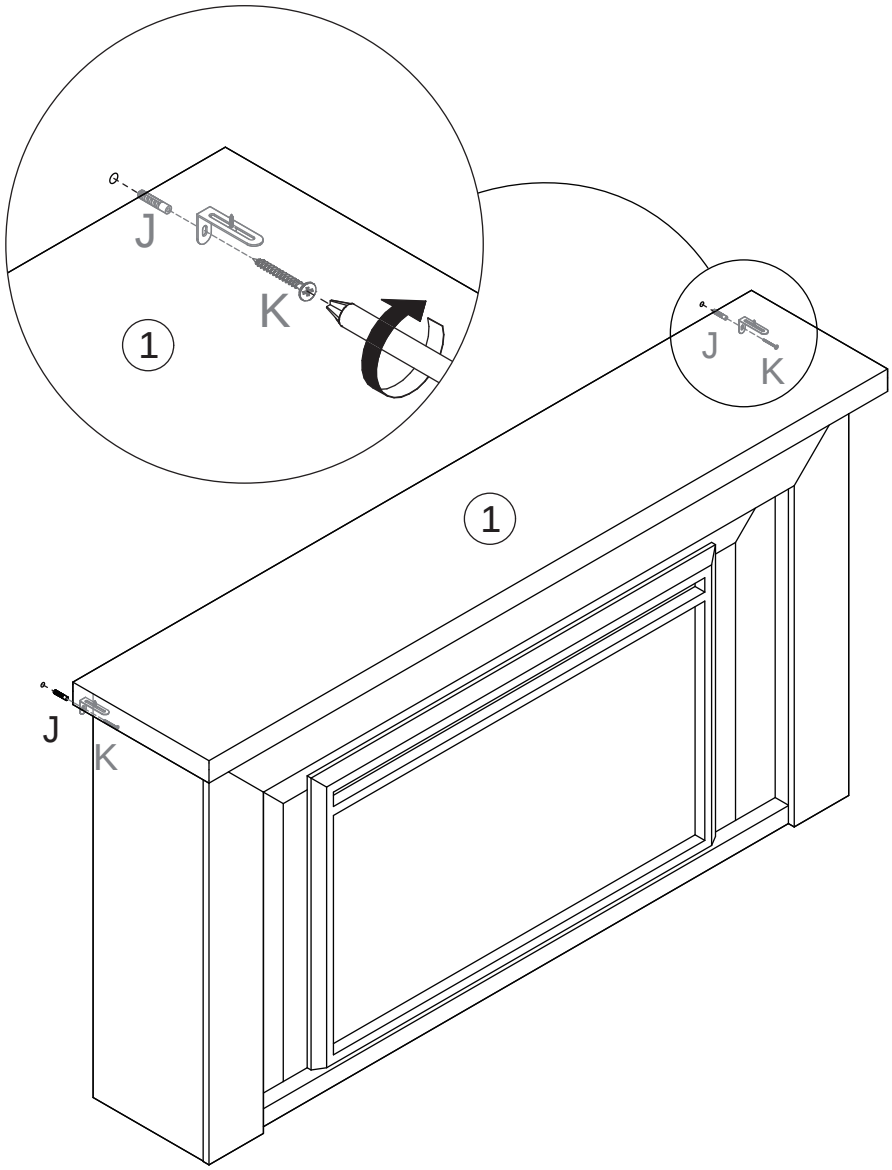

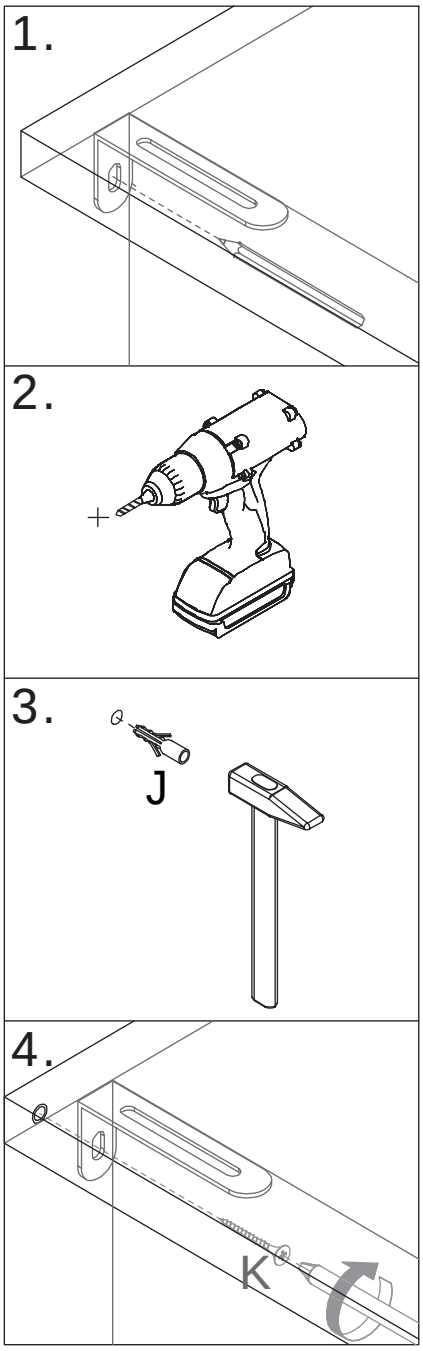

Install the anti-tip device as shown.

WARRANTY

WARRANTY CLAIMS

•There is a 30-day warranty for broken furniture or any other problems that do not work properly. The warranty will start from the date of purchase which must be verified by proof of purchase.

•Before making a claim, we may be able to answer your query, simply call us. Please leave your purchase order number, along with some details of the problem, if you want a replacement part. We will arrange within 48 hours. If there is out of stock, we will reply with a shipping date.

•The product must be used in accordance with the instructions provided. For health reasons.

•For other reasons, if the furniture needs to be returned, it must be cleaned and dried and operated within 30 days of receipt.

Type of Warranty Claim

•Failure to follow the furniture instructions will invalidate the warranty. Attention please.

•Does not include damage during installation, but includes damage during transportation.

Scope of responsibility

•Shall not bear any responsibility for misuse or user damage and / or loss of parts during the installation of furniture.

•After using, the damage and scratches of the furniture are not covered by the warranty.

The Warranty Relates to All Bought in The Us and Covers The Following Areas

•Sheet parts: 1 month from the date of purchase.

•Electrical parts: 1 month from the date of purchase.

RETURNS

CHANGED YOUR MIND AND NEED TO RETURN YOU ITEM?

PLEASE FOLLOW THE BELOW INSTRUCTIONS:

- If you have purchased and have simply changed your mind, follow the retailer's instructions for returns.

DEFECTIVE ITEMS

- If your item is defective in any way, i.e. it doesn't work but you can't identify why, in the first instance, please call us.

DAMAGED ITEMS

- If you receive an order with obvious shipping damage from the retailer, then we suggest the delivery is refused. If the delivery has been accepted and then shipping damage is found, please follow the specific instructions advised by the retailer.
  In all circumstances please save all packaging material and paperwork for the order. Please be aware that if you dispose of packaging material or attempt to return the merchandise without contacting the fulfiller, you jeopardise your chances of making a claim, and you may not receive a credit for the return.

AFTER-SALES CONTACT

[illegible]

[illegible]