MBRU-832
Manual Sofa

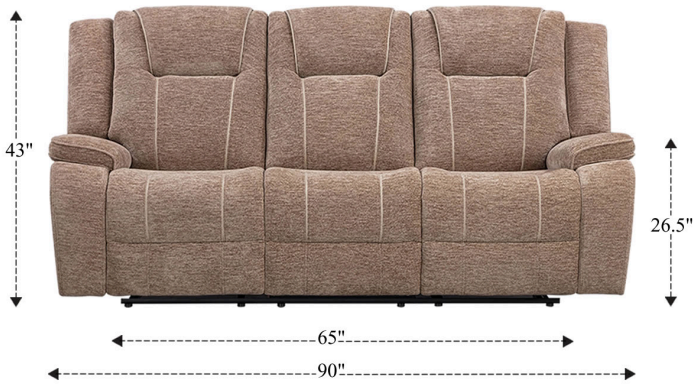



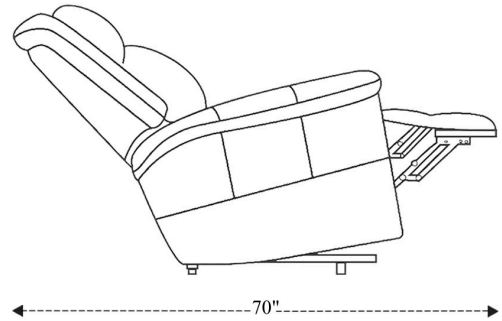

Overall Dimensions	90" x 43" x 43"
Overall Width	90"
Overall Depth	43"
Overall Height	43"
Overall Weight	235.4 lbs.
Fully Reclined	70"
Distance from Wall	6"
Back of Seat to end of Chaise	41.75"
Leg Height (Distance from Foot Rest to Floor in Full Recline)	23.5"
Head Height (Distance from Headrest to Floor in Full Recline)	32.25"

Seat Width	21"
Seat Depth	22"
Seat Height	21"
Arm Width	12"
Arm Depth	20.5"
Arm Height	26.5"
Back Width	85.5"
Back Height	26"
Foot Height	3.5"
Headrest Extended from Back	--

MBRU-812G
Manual Glider Recliner



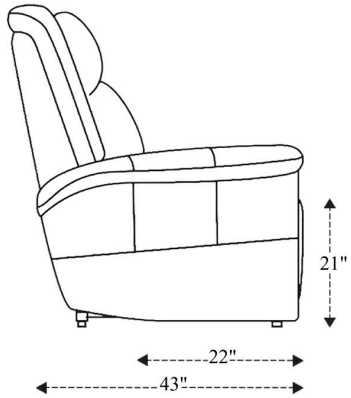



Overall Dimensions	43" x 43" x 43"
Overall Width	43"
Overall Depth	43"
Overall Height	43"
Overall Weight	129.8 lbs.
Fully Reclined	70"
Distance from Wall	6"
Back of Seat to end of Chaise	41.75"
Leg Height (Distance from Foot Rest to Floor in Full Recline)	23.5"
Head Height (Distance from Headrest to Floor in Full Recline)	32.25"

Seat Width	20"
Seat Depth	22"
Seat Height	21"
Arm Width	12"
Arm Depth	20.5"
Arm Height	26.5"
Back Width	39"
Back Height	26"
Foot Height	3.5"
Headrest Extended from Back	--