ASSEMBLY INSTRUCTIONS

DINING CHAIR
AJFX5028DC

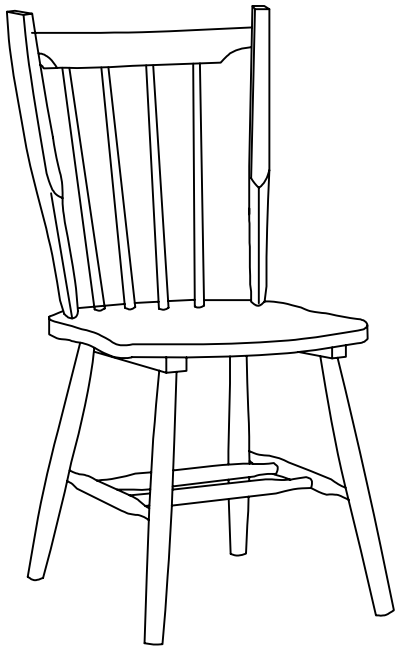

Component List

LABEL		DESCRIPTION	QTY
A		Chair Back	1
B		Legs Frame	2
C		Long Stretcher	1
D		Short Stretcher	1

Hardware List

LABEL		DESCRIPTION	QTY
H1		JCBC Bolt M6 X50mm	2
H2		Barrel NUT	2
H3		JCBC Screw M7 x 35mm	6
H4		Allen Key	1
H5		Wood Button	2

1

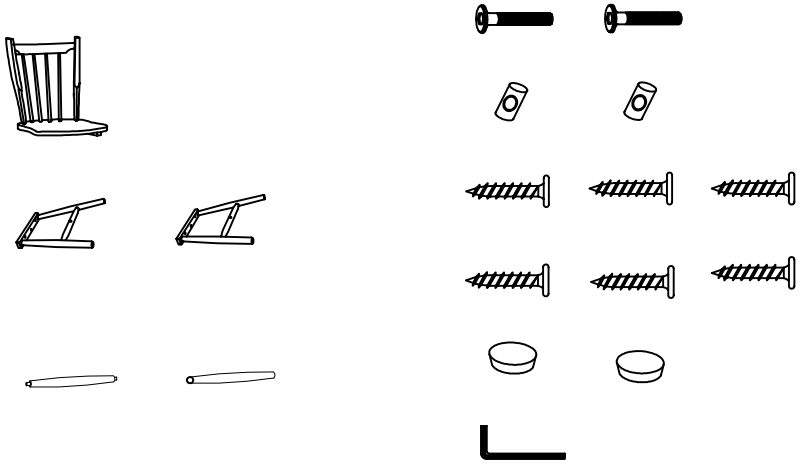

2

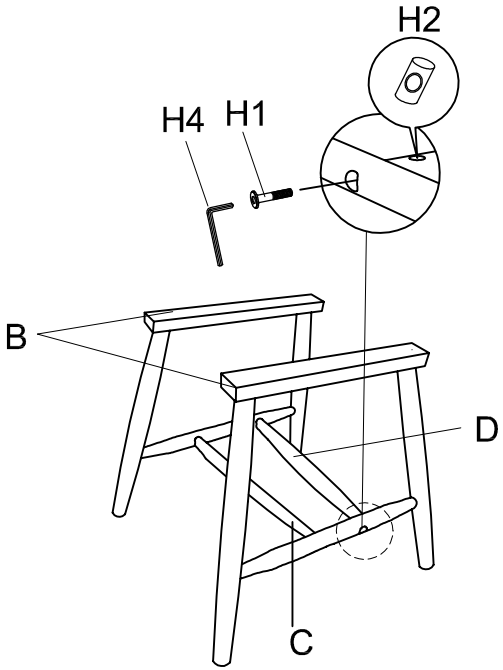

Insert barrel Nut (H2) into holes on Short Stretcher (D) and assemble Short stretcher (D) using JCBC Bolts (H1) in line with barrel nut (H2) and Allen Key (H4) .
(Do not tighten yet.)



H4 x 1



H1 x 2



H2 x 2

3

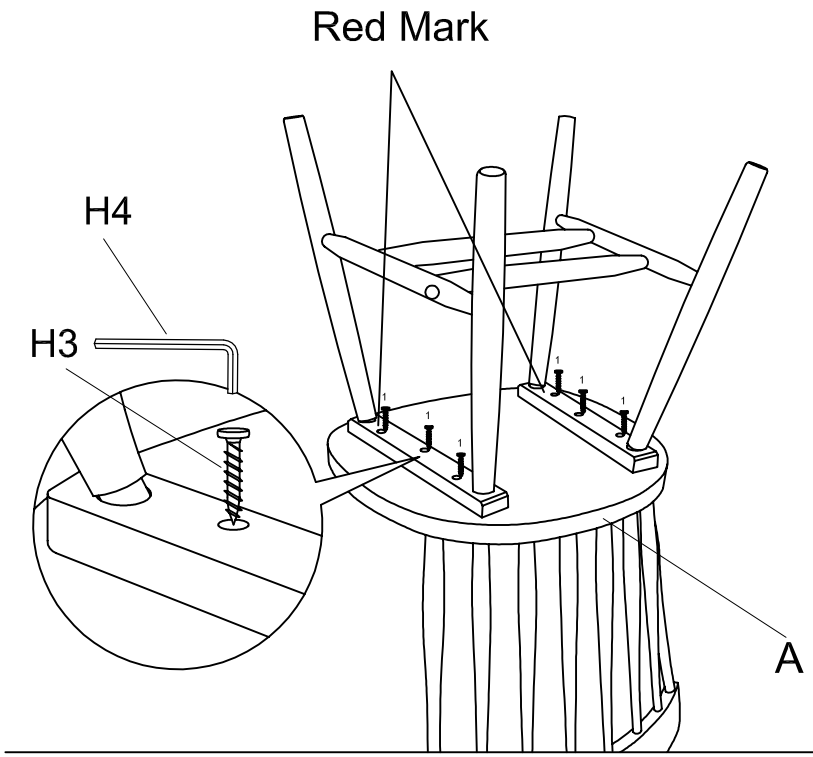

Position the frame assembly into the bottom of chair seat.Align and tighten bolt chair seat and frame using the JCBC Screw (H3) with Allen Key (H4).

*** Front legs with **RED MARK** must facing front .



H4 x 1



H3 x 6

4

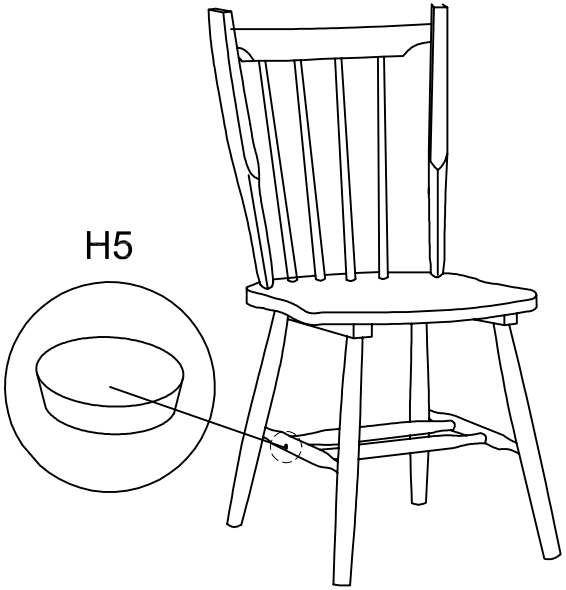

Please tighten all the JCBC Bolt & Screw then insert the Wood Button (H5) to the bottom stretcher for cover the hole.



H5 x 2

5

