User's Manual

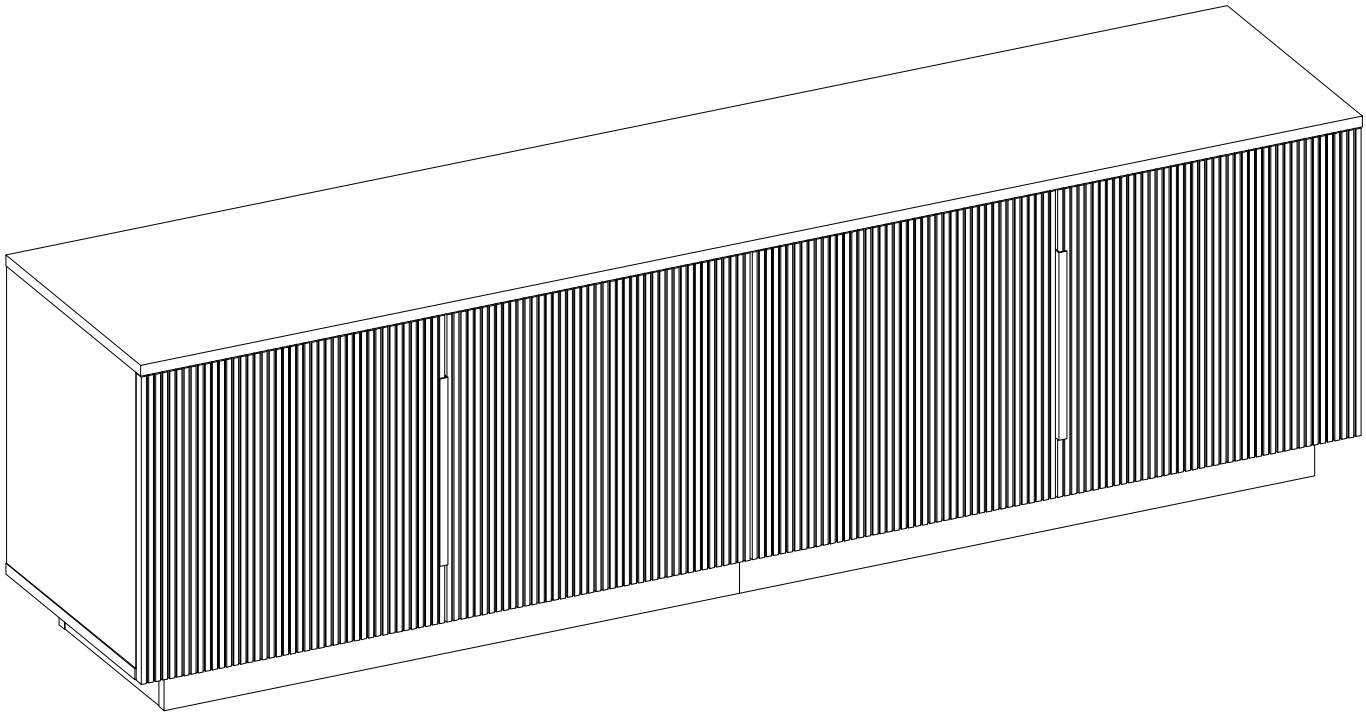

DS-TS013B/ F/H

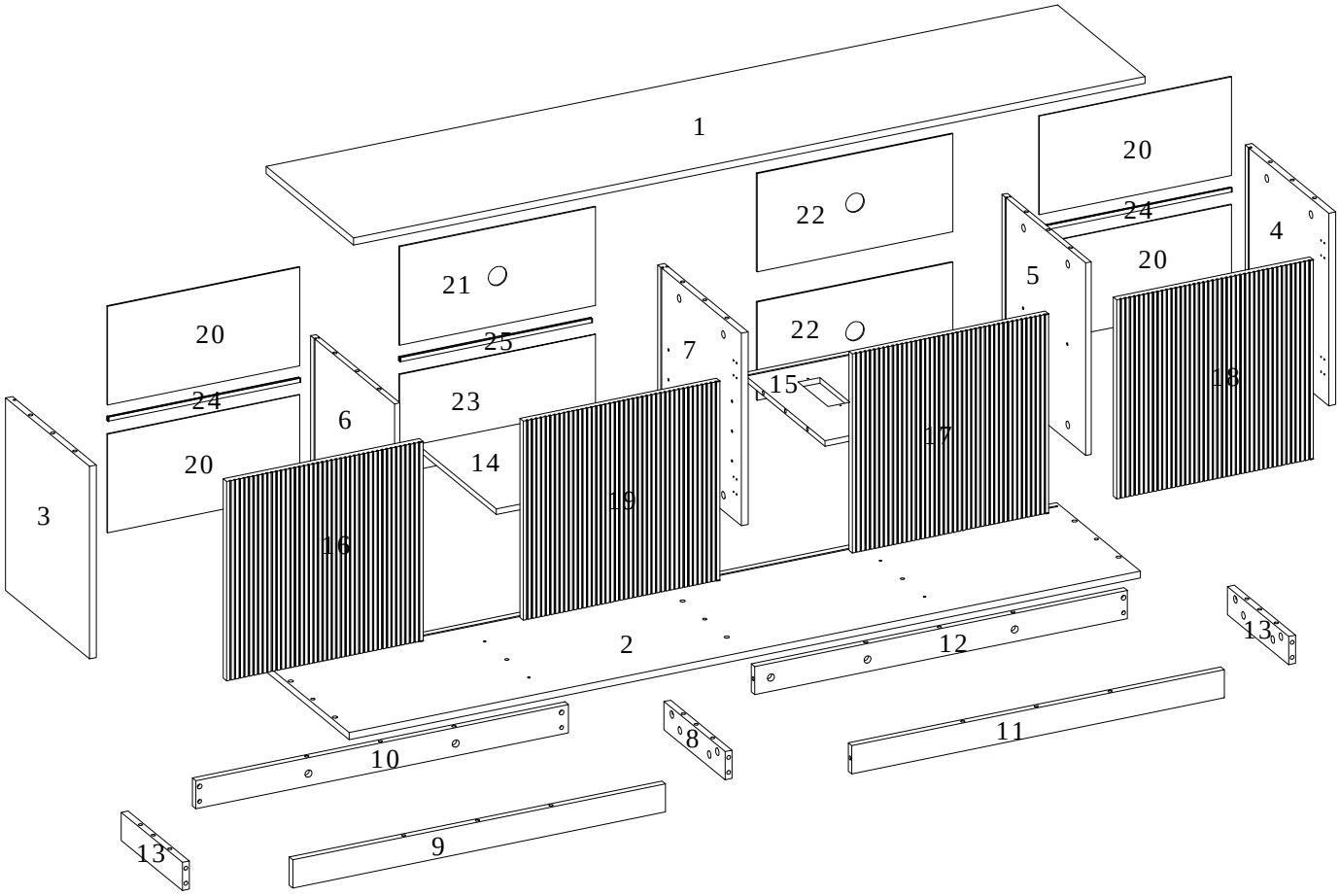

A

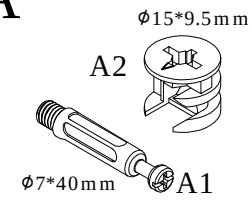

34PCS

B

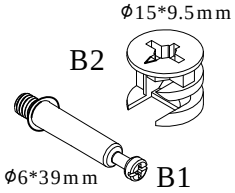

12PCS

C

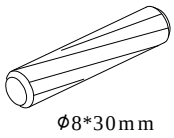

25PCS

D

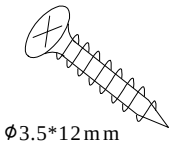

52PCS

E

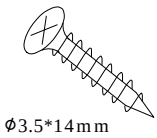

32PCS

F

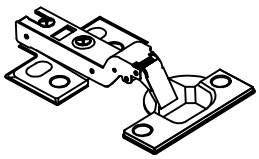

4PCS

G

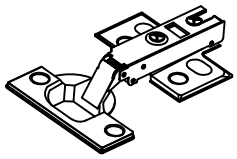

4PCS

H

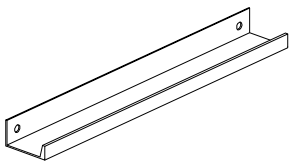

2PCS

I

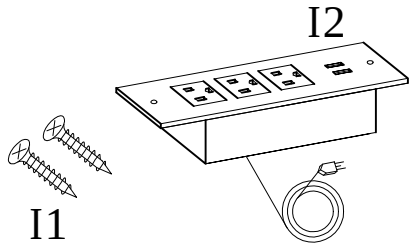

1PC

J

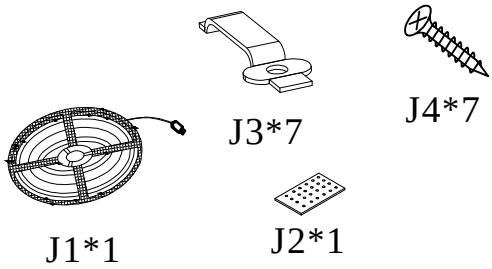

1PC

K

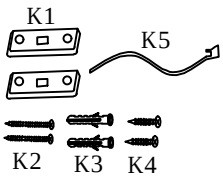

2PCS

L

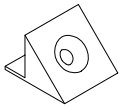

32PCS

M

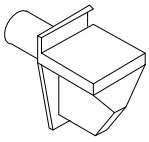

4PCS

N

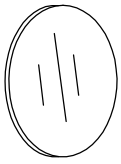

46PCS

1

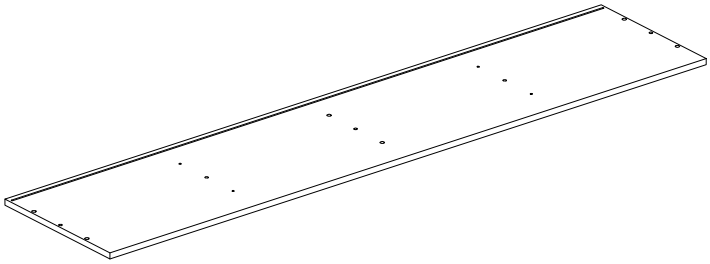

1720*380mm

2

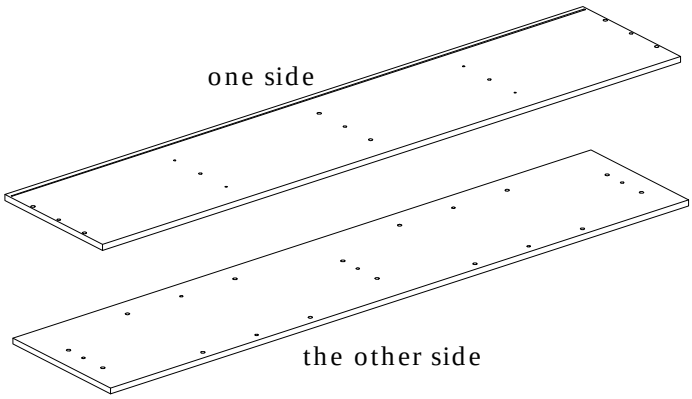

1720*364mm

3

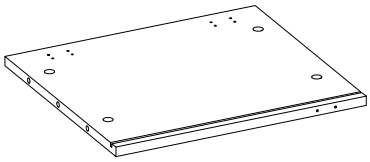

410*364mm

4

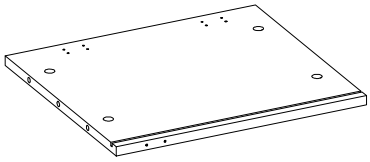

410*364mm

5

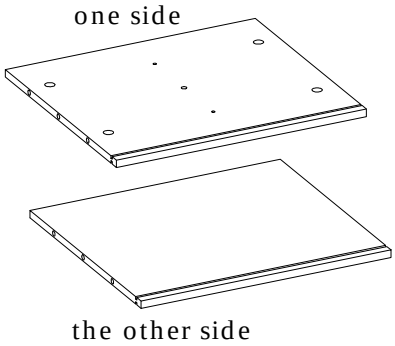

410*364mm

6

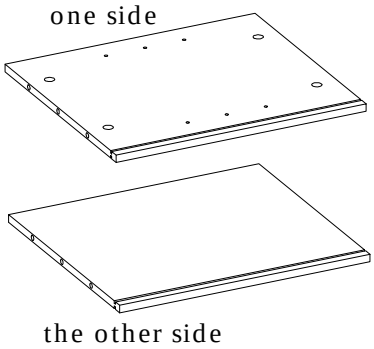

410*364mm

7

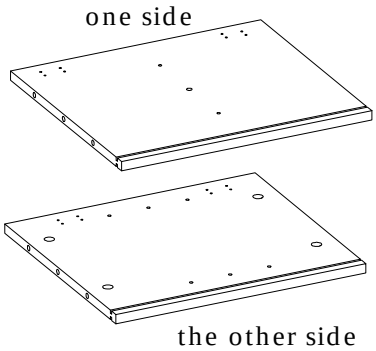

410*364mm

8

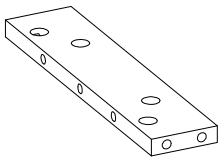

250*60mm

9

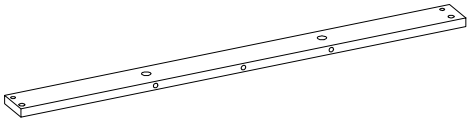

810*60mm

10

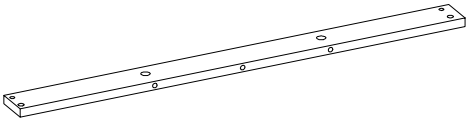

810*60mm

11

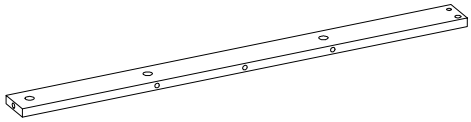

810*60mm

12

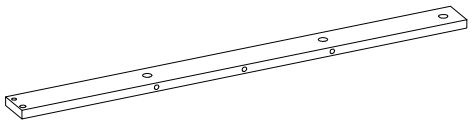

810*60mm

13

X2

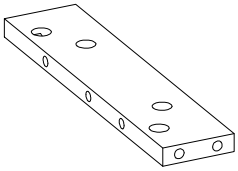

250*60mm

14

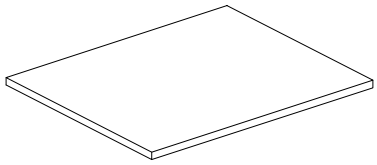

414.5*342mm

15

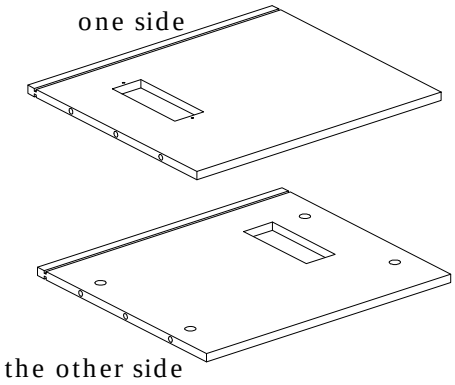

416.5*361mm

16

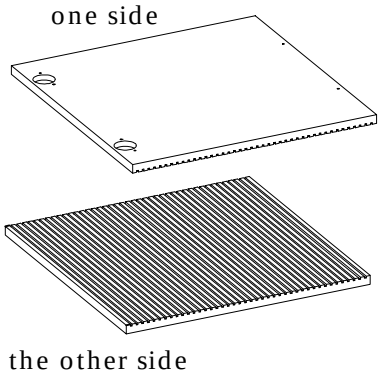

424*427mm

17

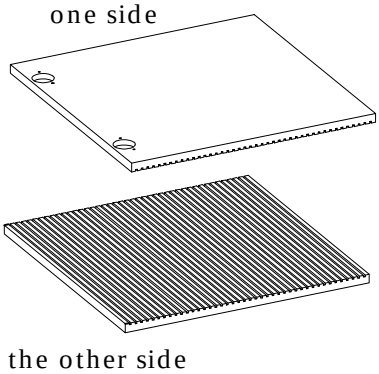

424*427mm

18

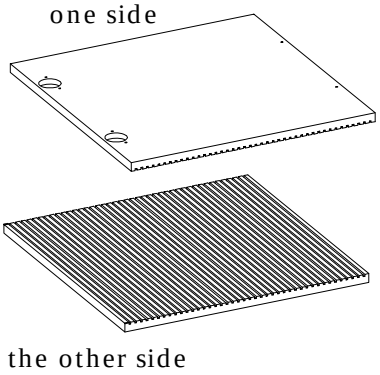

424*427mm

19

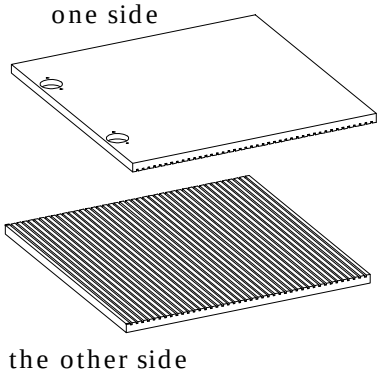

424*427mm

20

X4

416*209mm

21

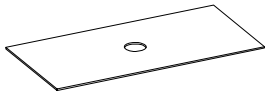

423.5*209mm

22

X2

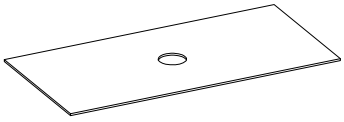

423.5*207mm

23

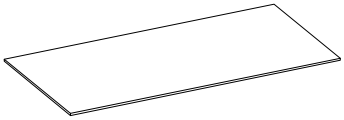

423.5*209mm

24

X2

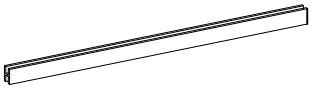

L=406mm

25

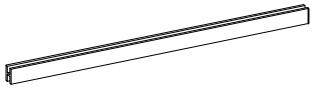

L=414mm

STEP 1

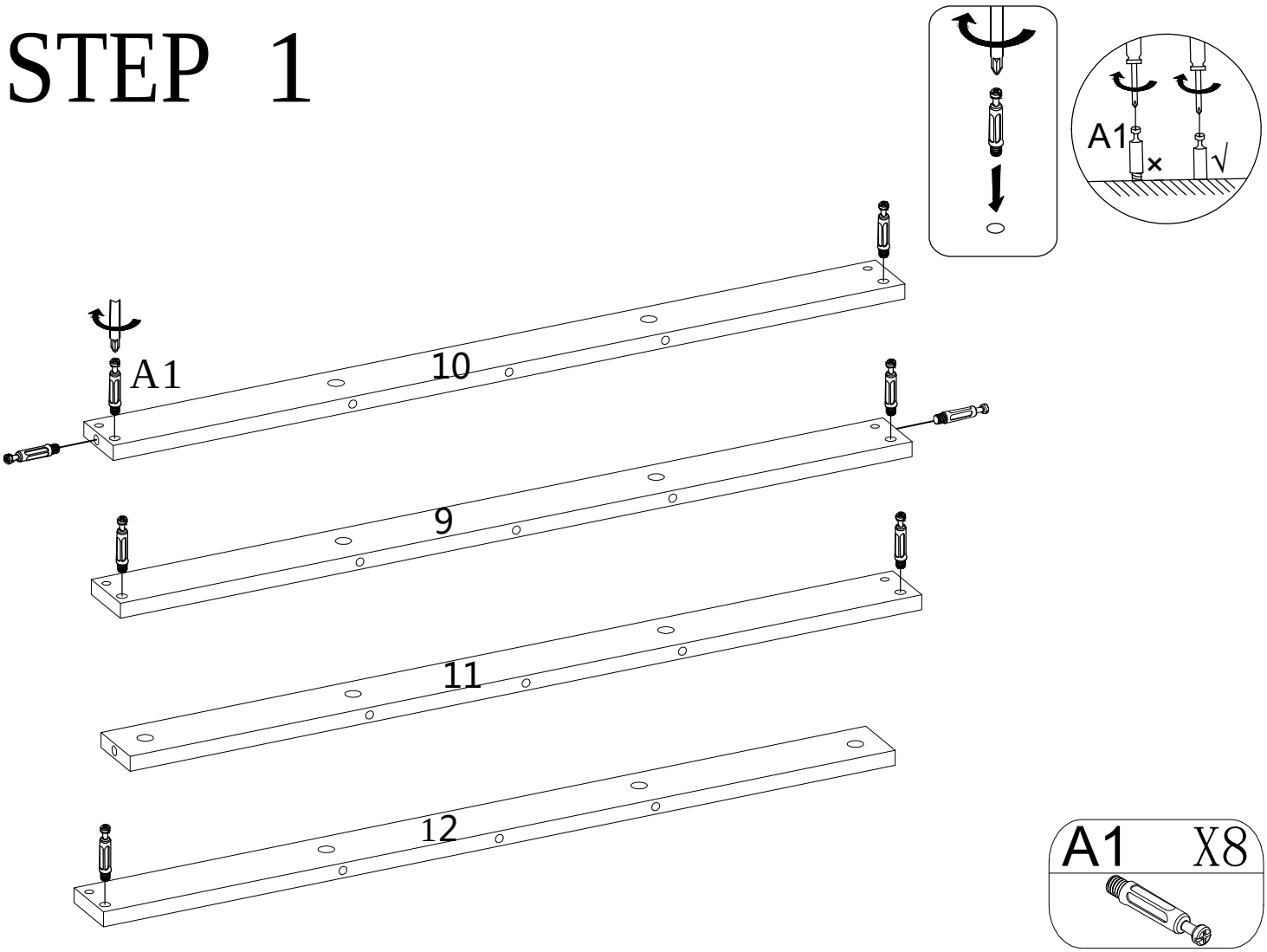

STEP 2

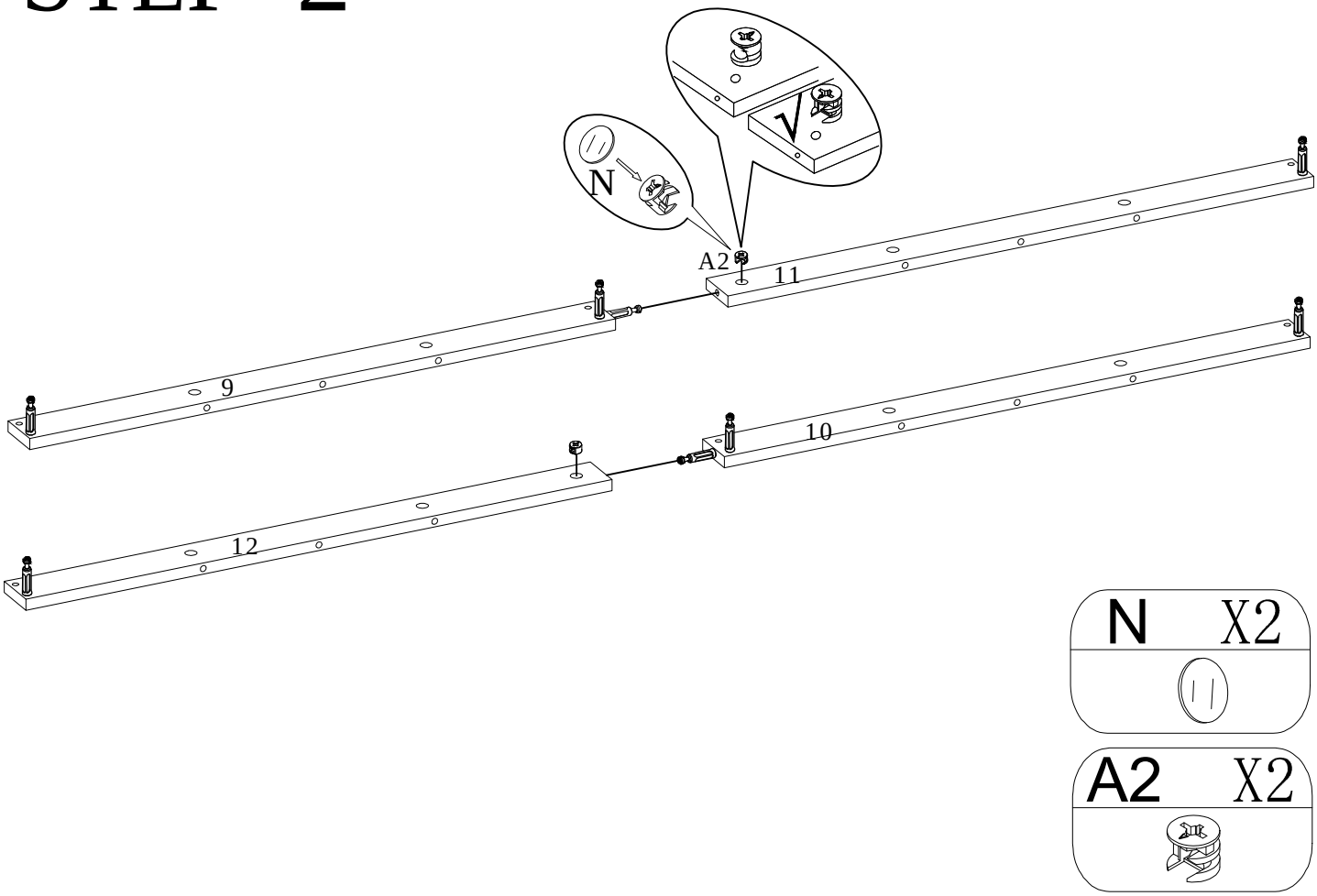

STEP 3

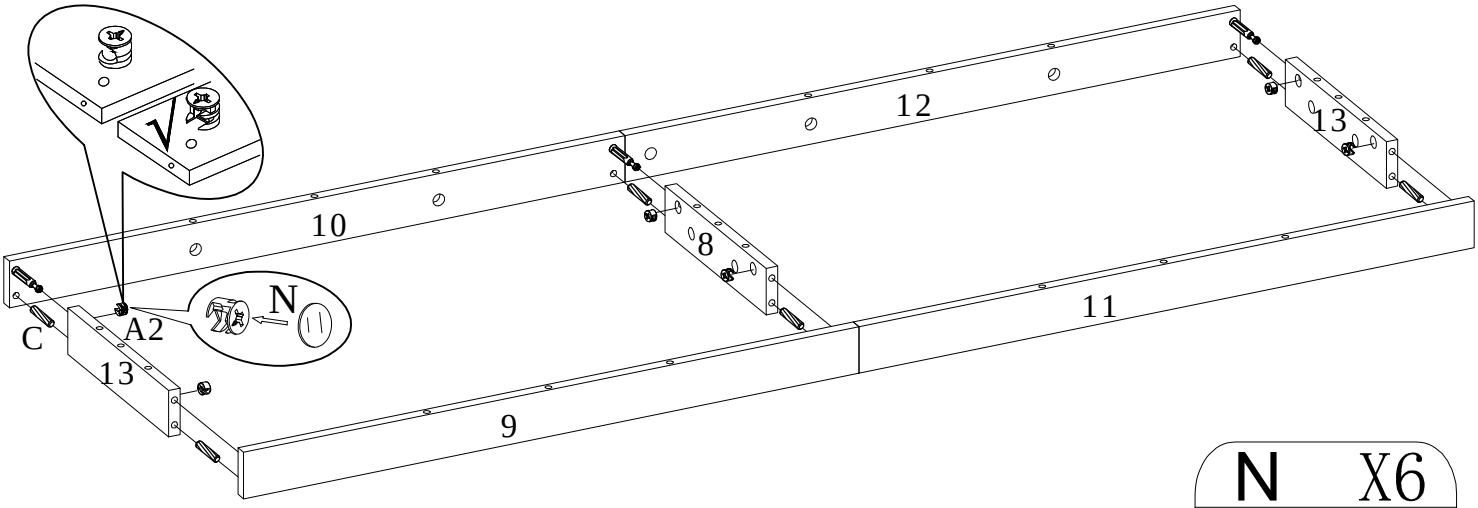

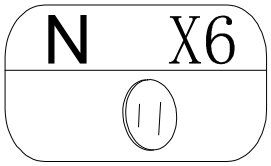

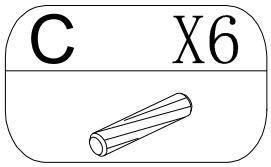

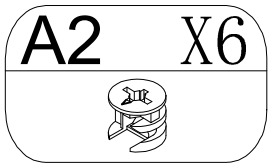

STEP 4

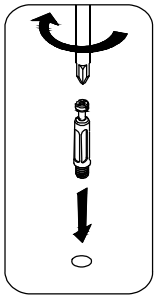

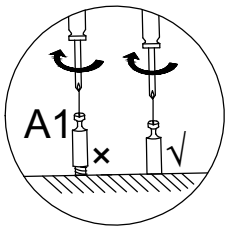

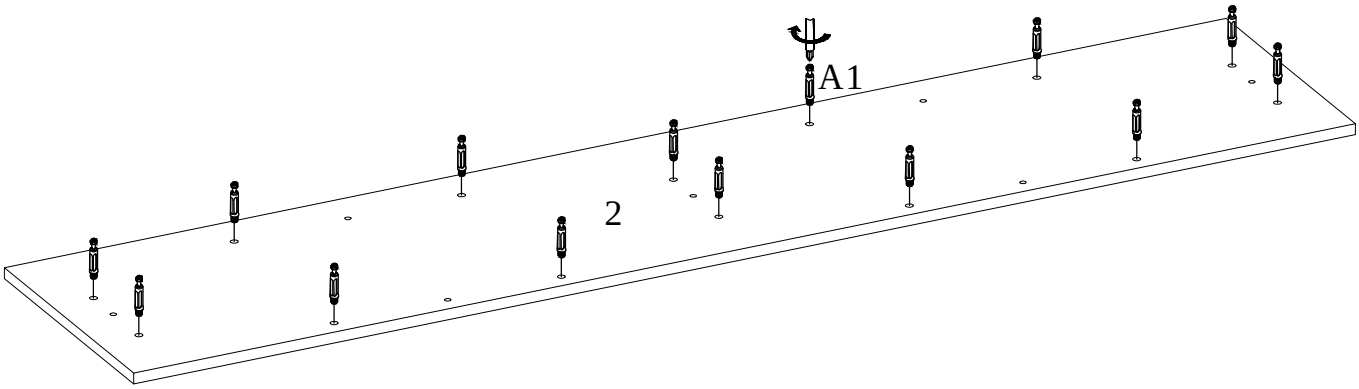

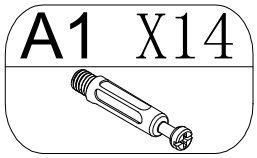

STEP 5

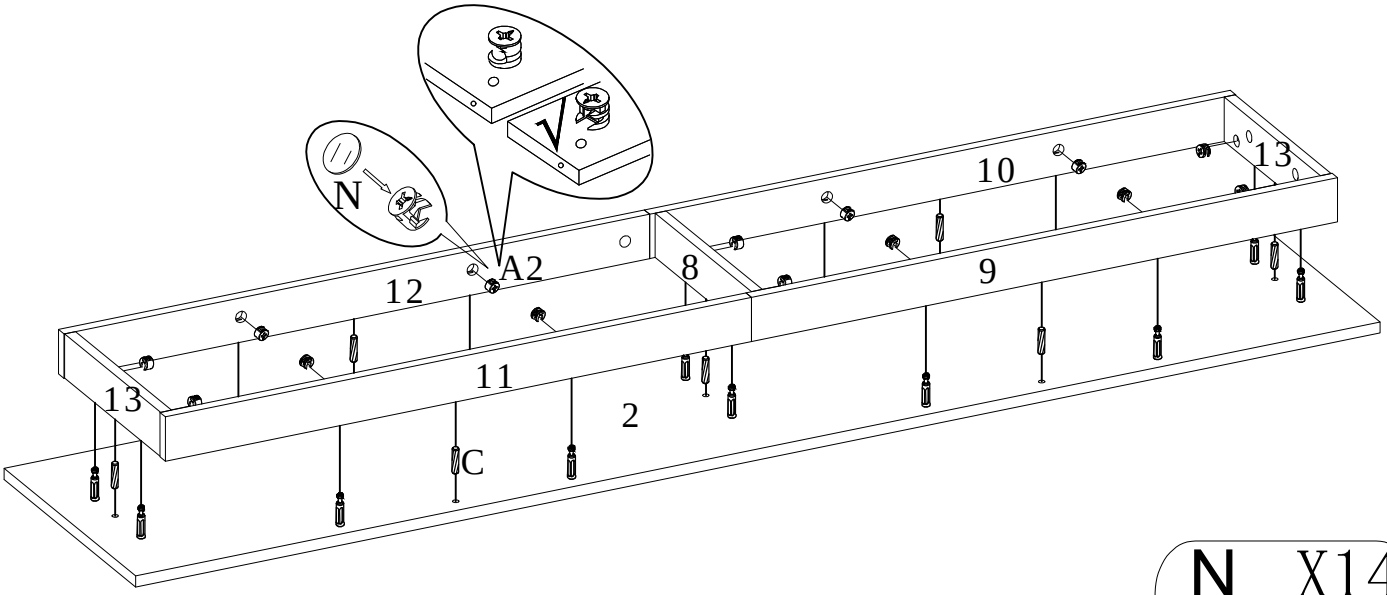
N
A2
12
8
10
13
9
11
13
2
C

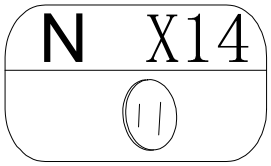
N X14

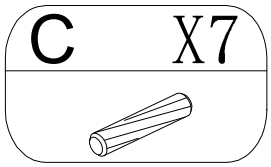
C X7

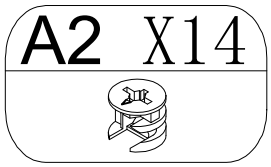
A2 X14

STEP 6

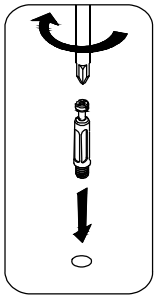

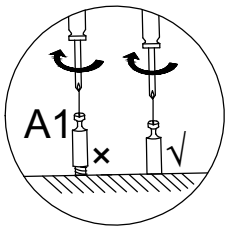
A1
×
√

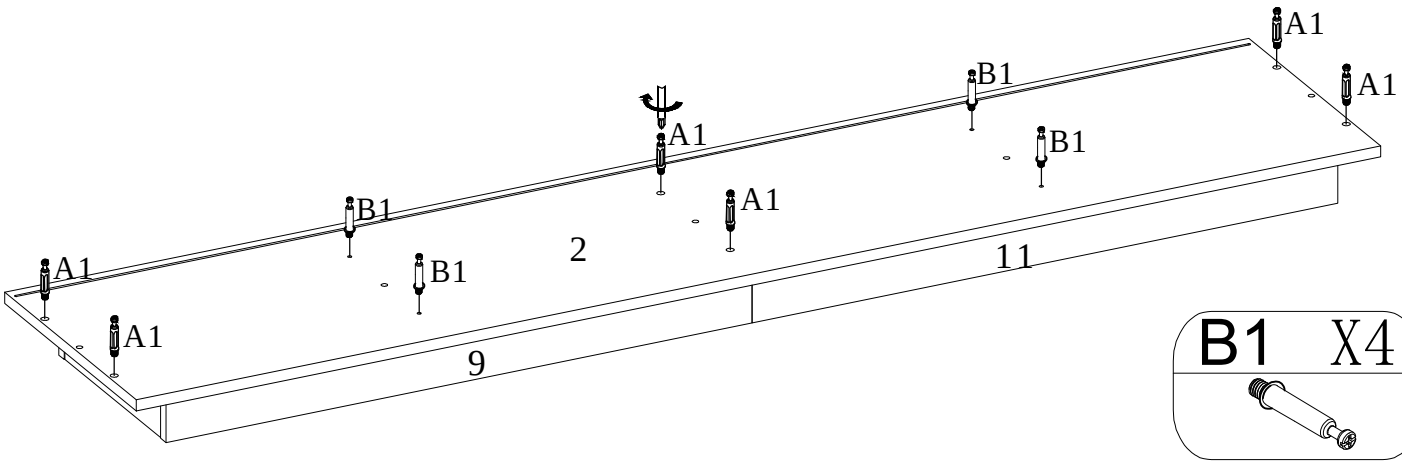
A1
B1
A1
B1
A1
A1
B1
A1
B1
2
11
A1
9

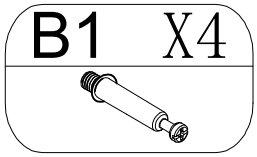
B1 X4

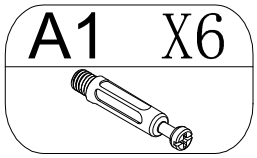
A1 X6

STEP 7

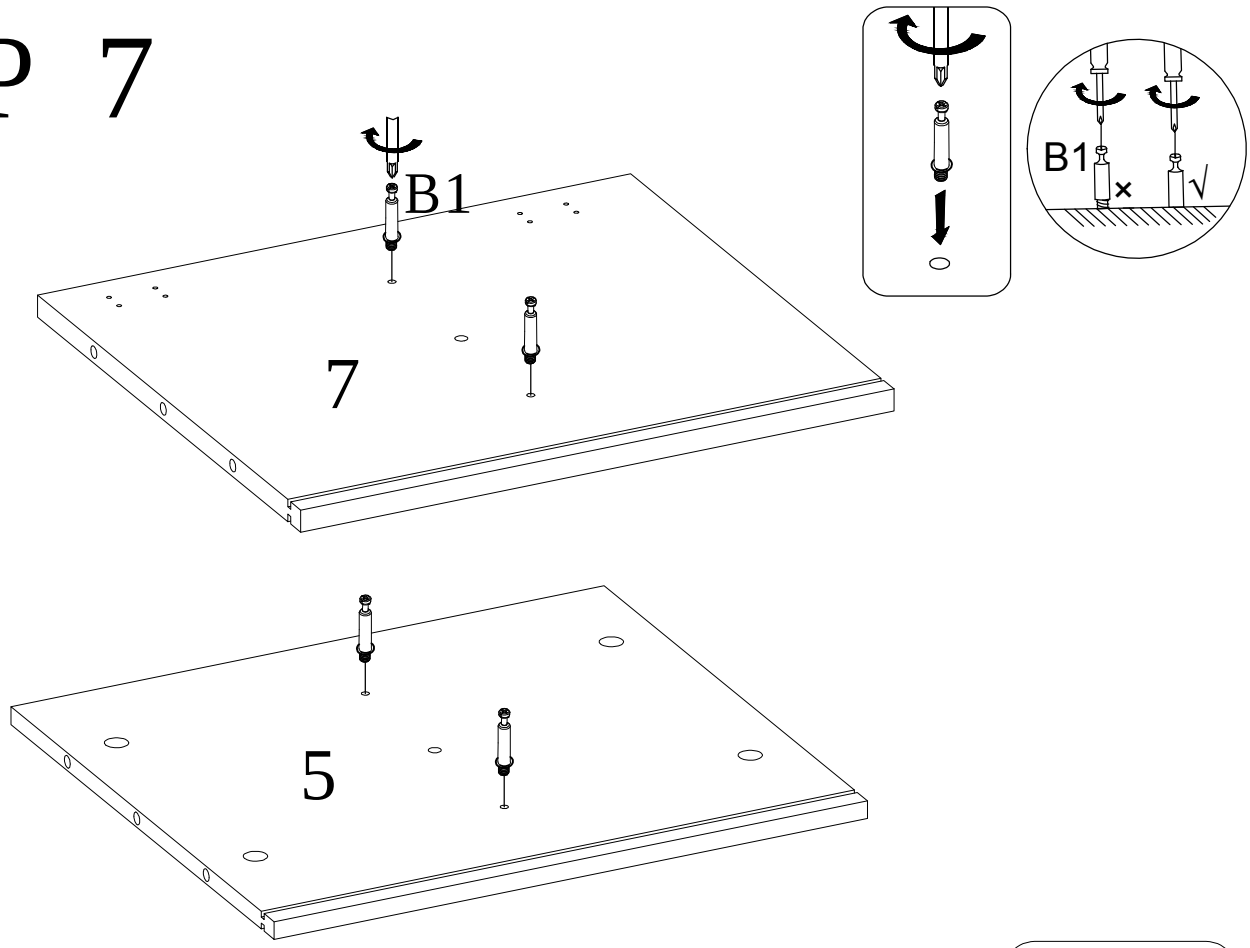

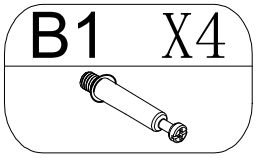

STEP 8

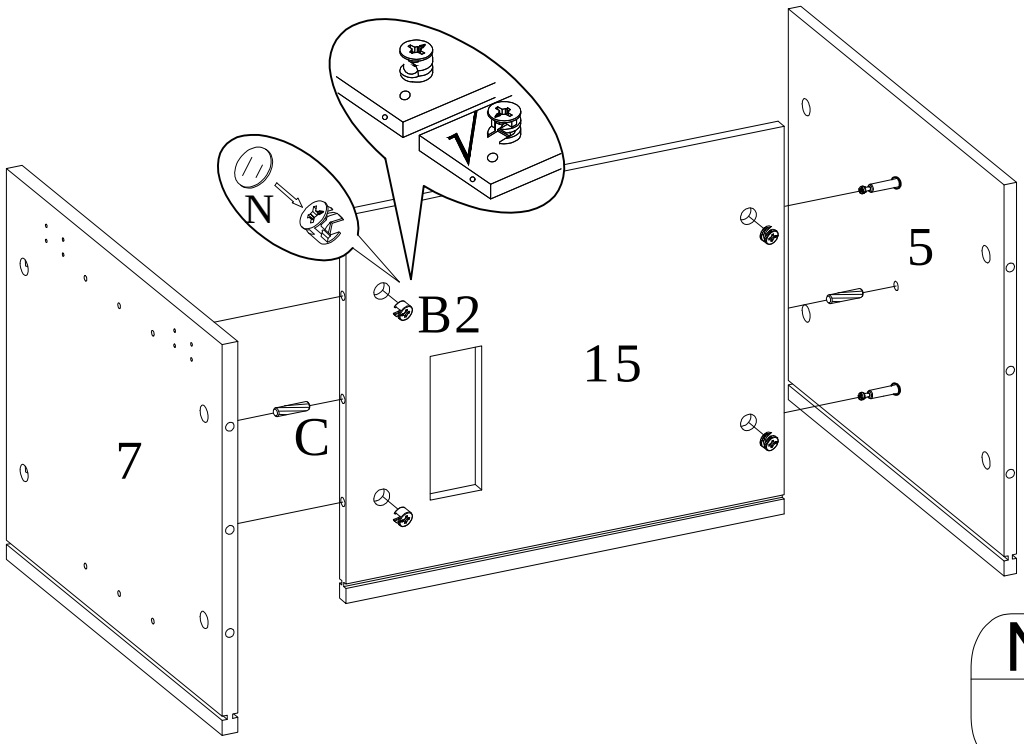

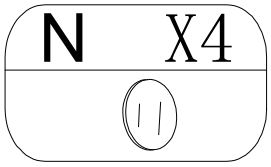

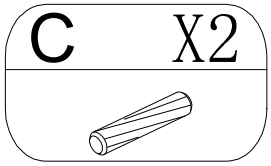

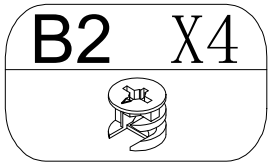

STEP 9

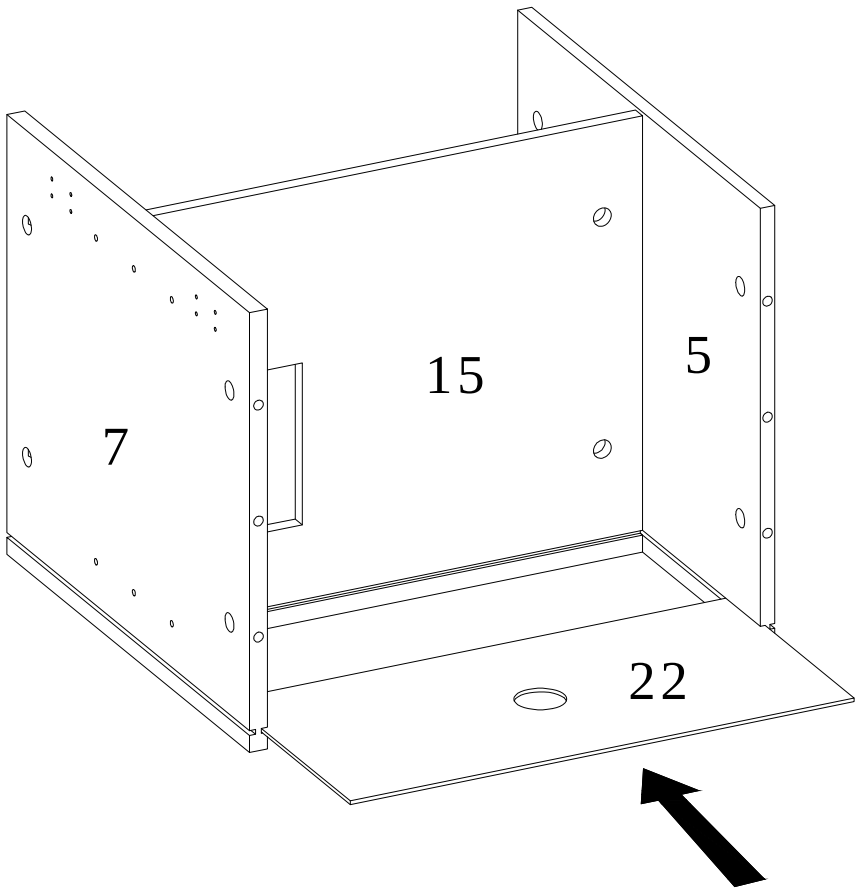

STEP 10

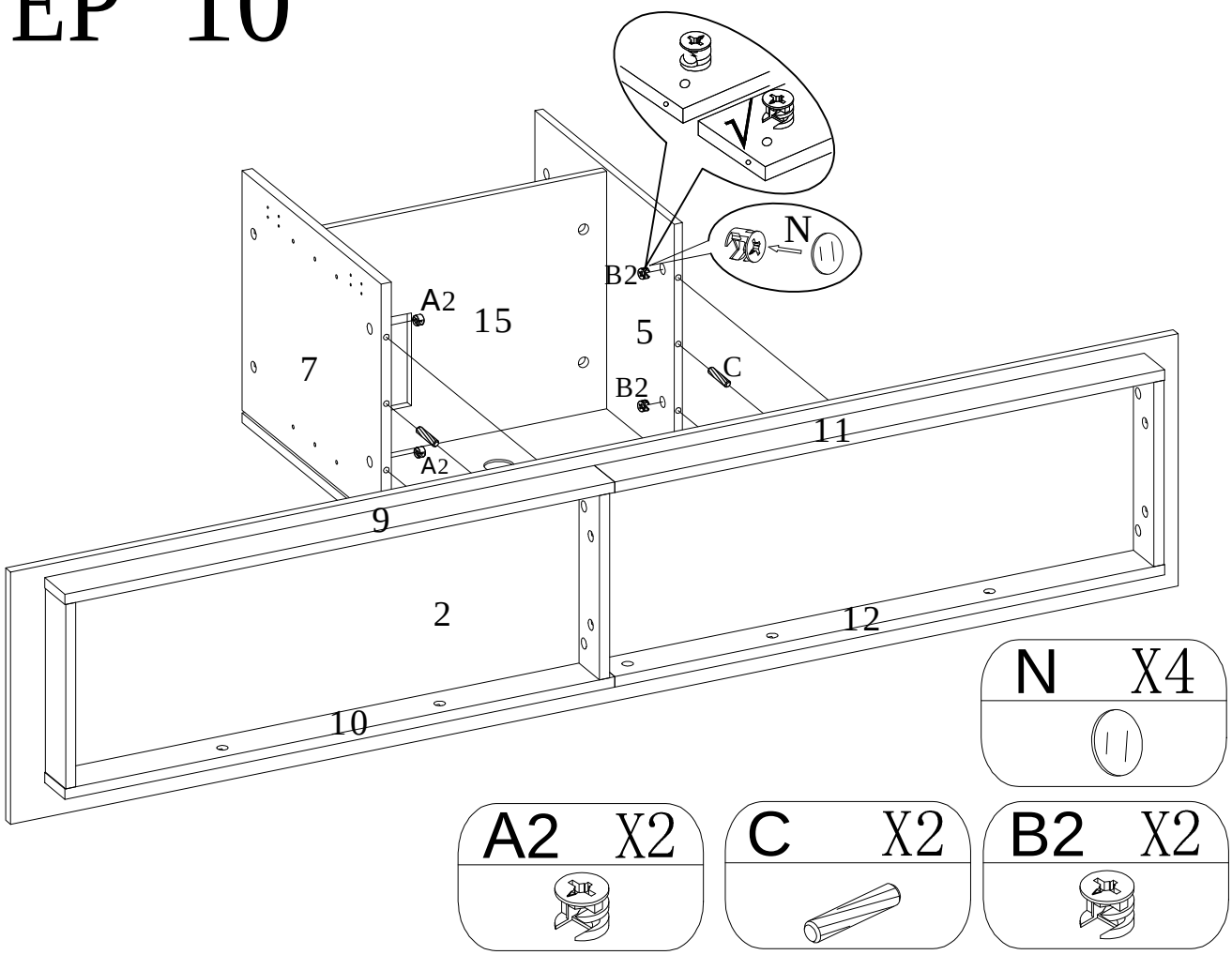

STEP 11

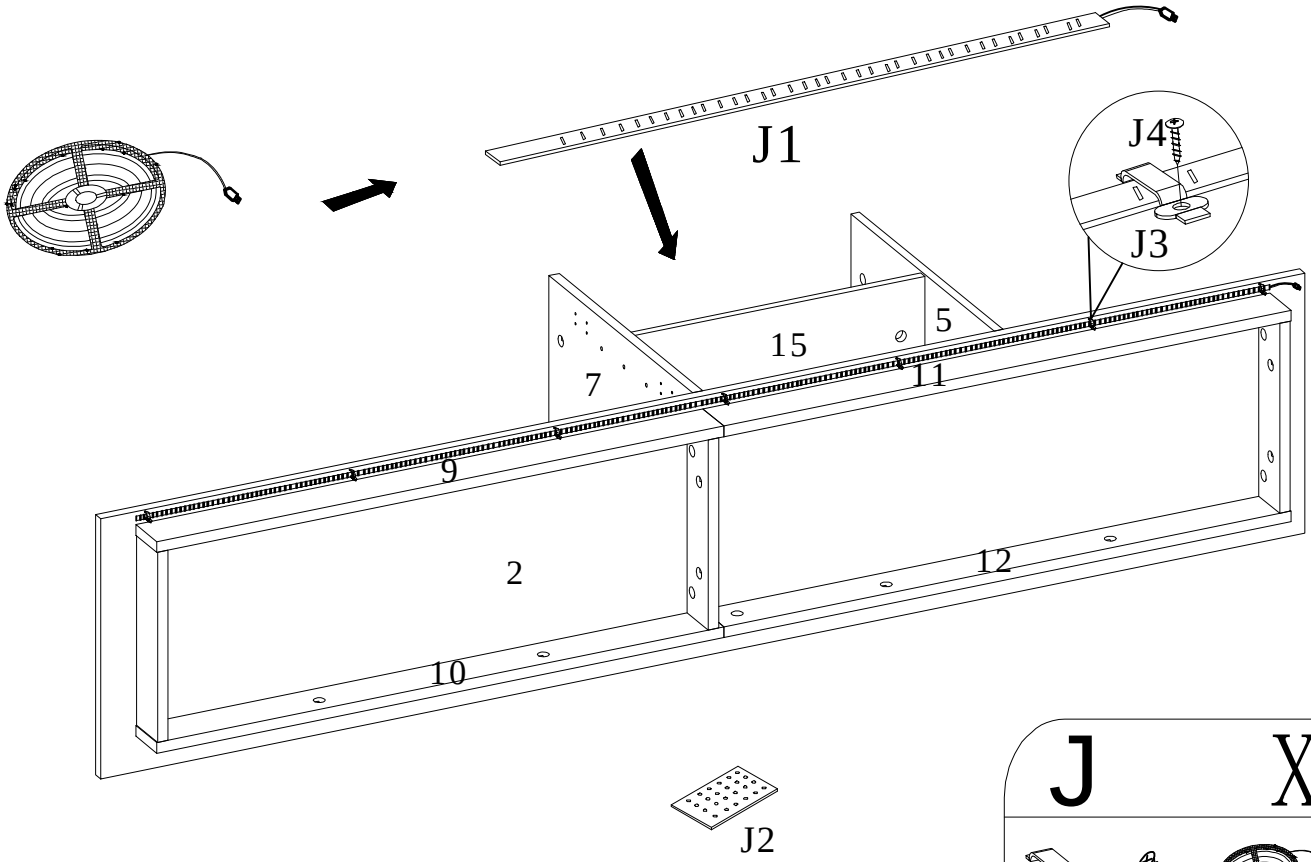

J	X1
J3*7	J4*7	J1*1	J2*1

STEP 12

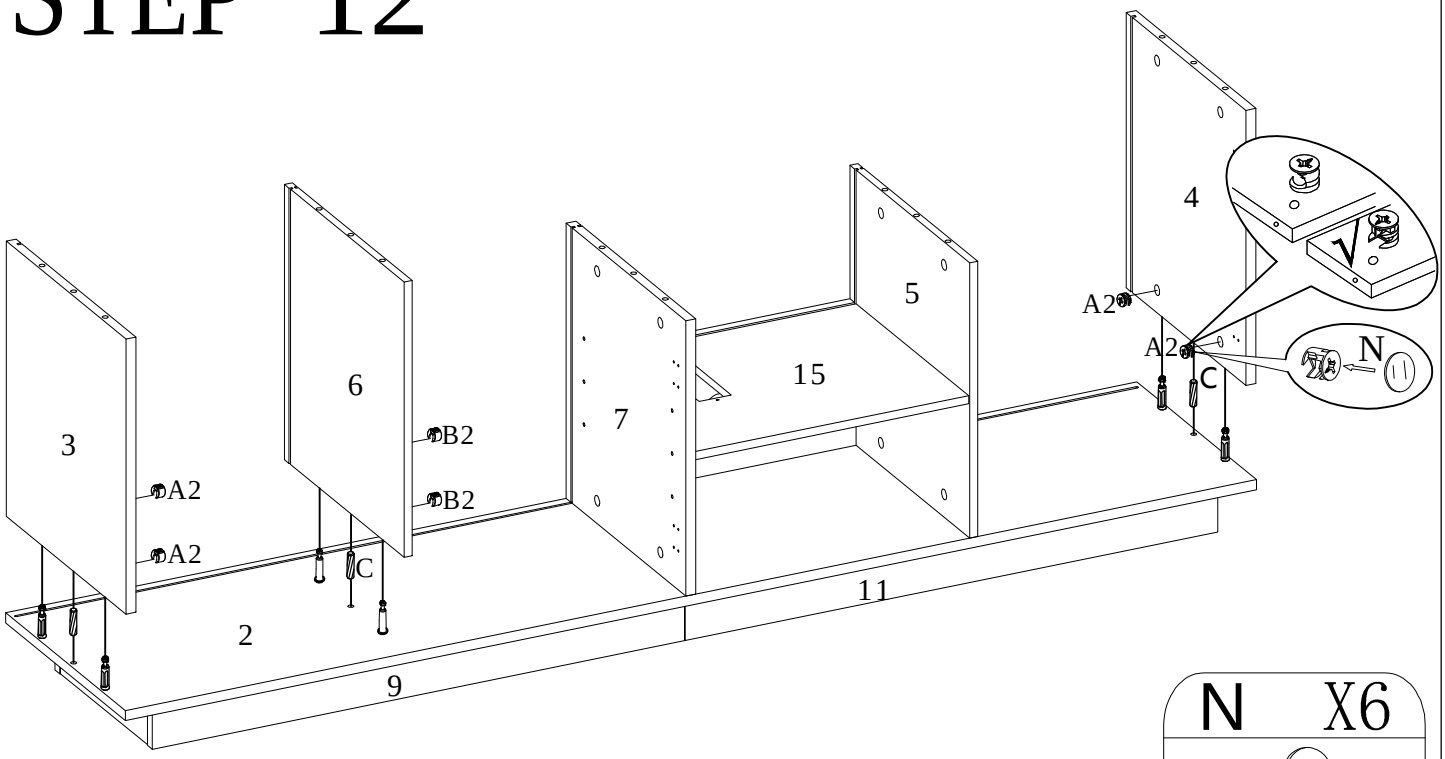

N	X6

A2	X4	C	X3	B2	X2

STEP 13

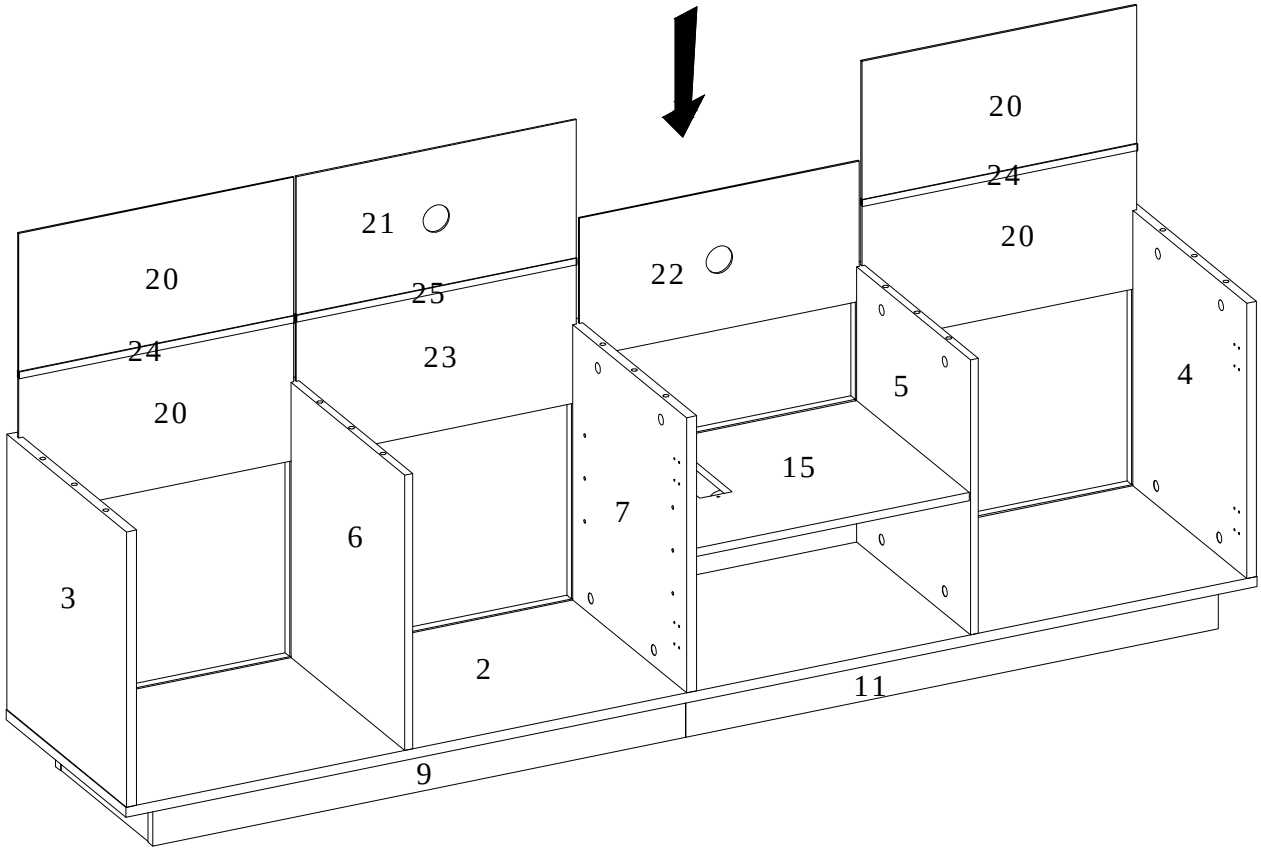

STEP 14

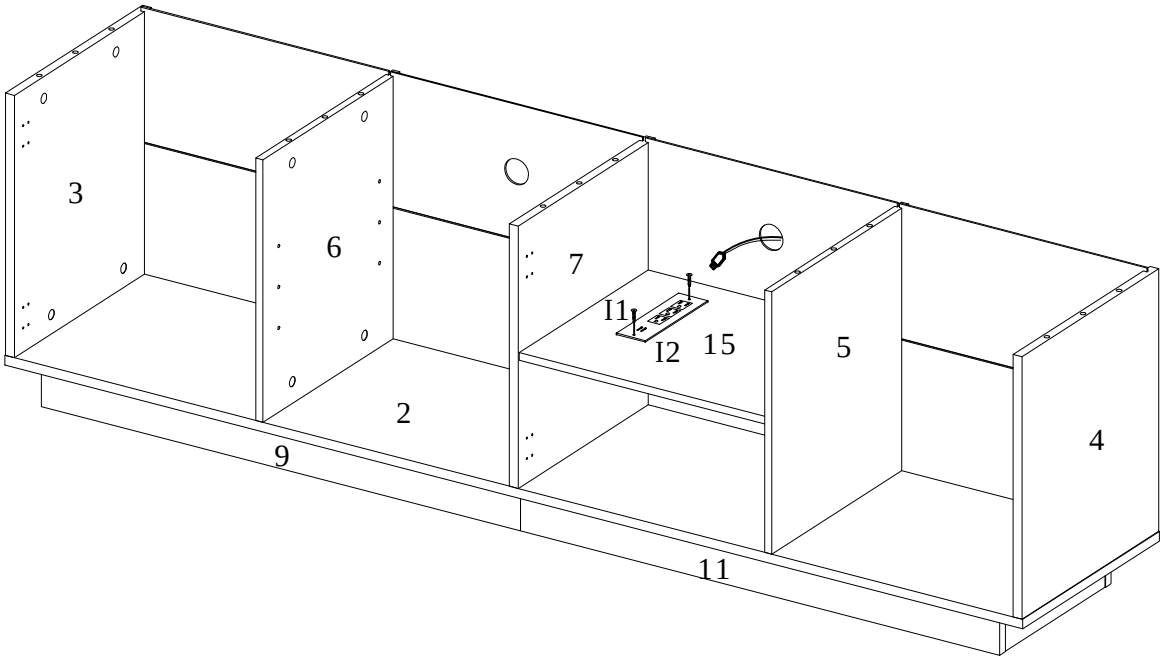

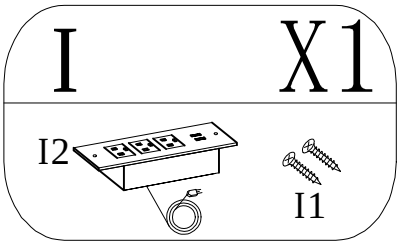

STEP 15

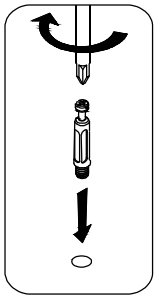

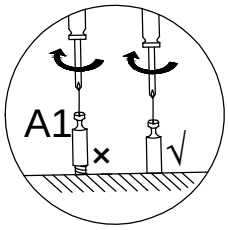

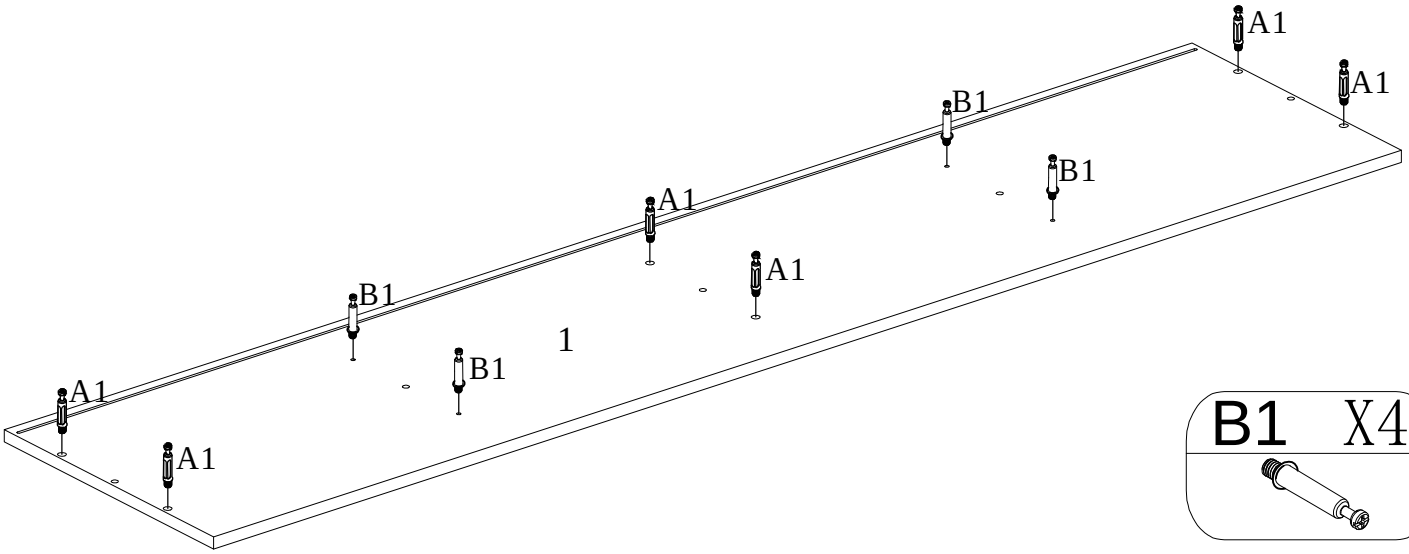

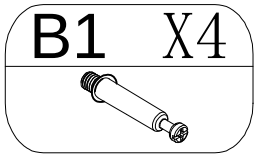

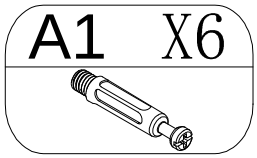

STEP 16

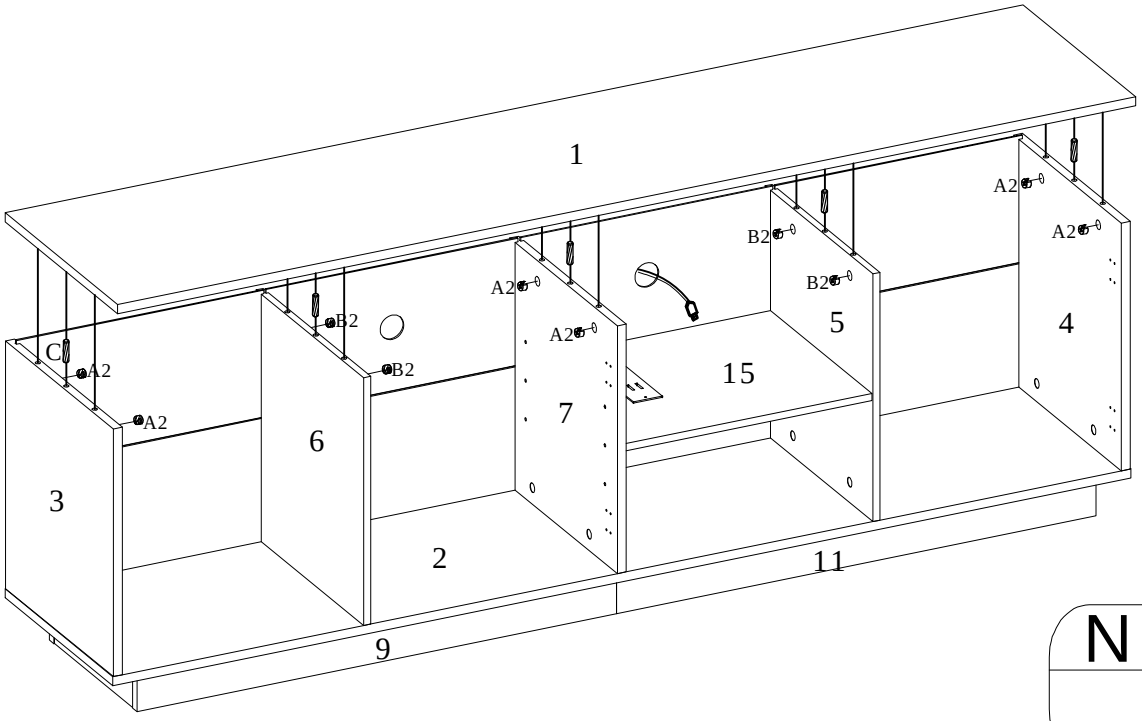

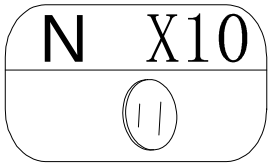

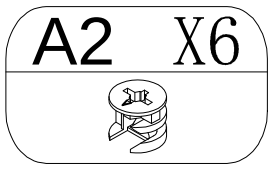

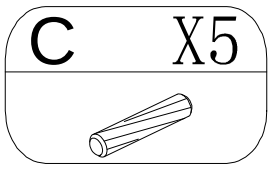

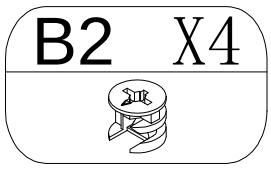

STEP 17

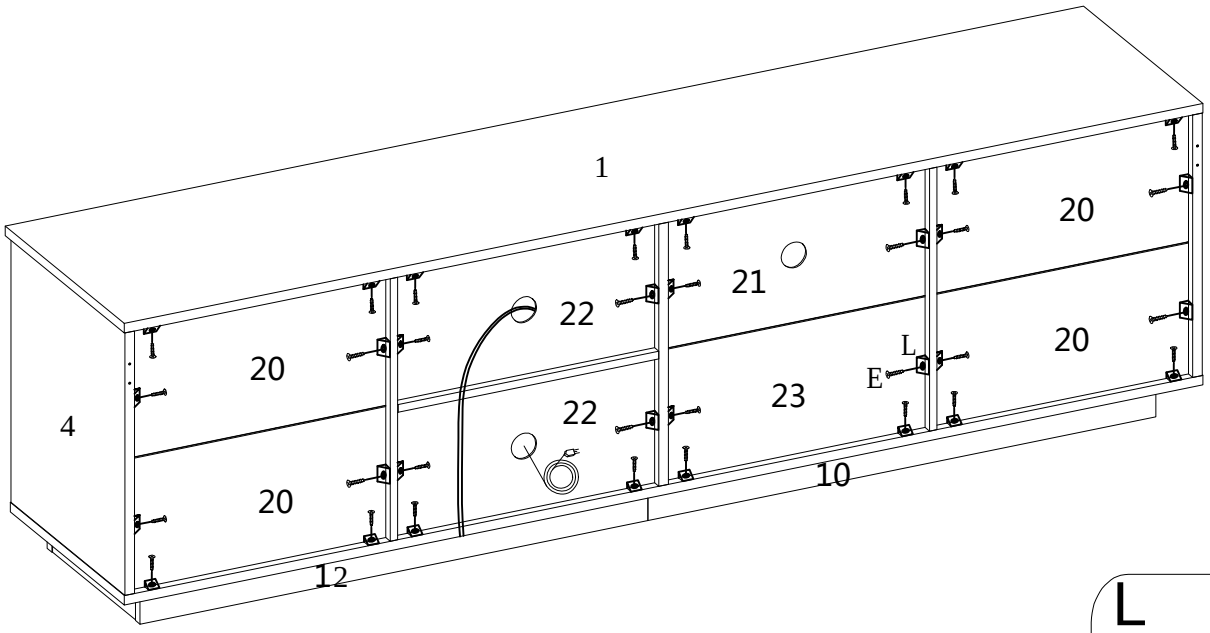

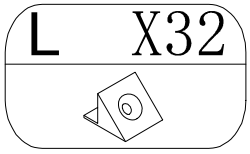

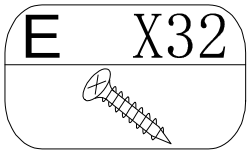

STEP 18

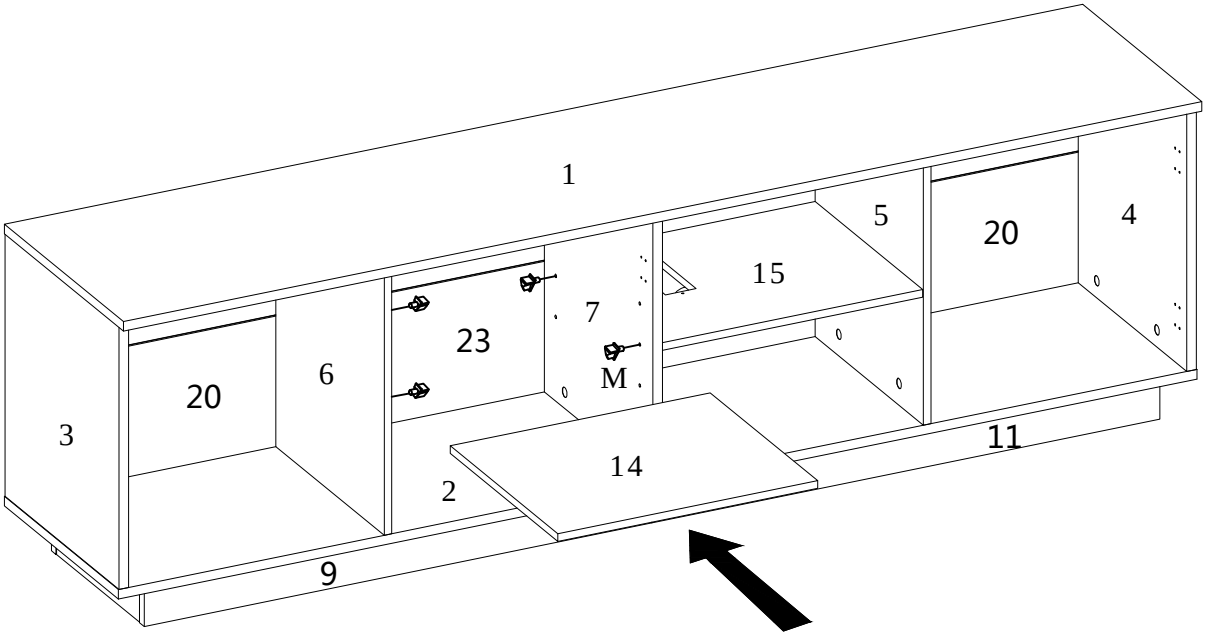

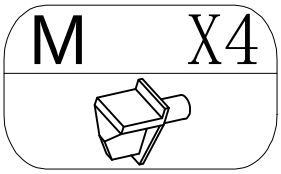

STEP 19

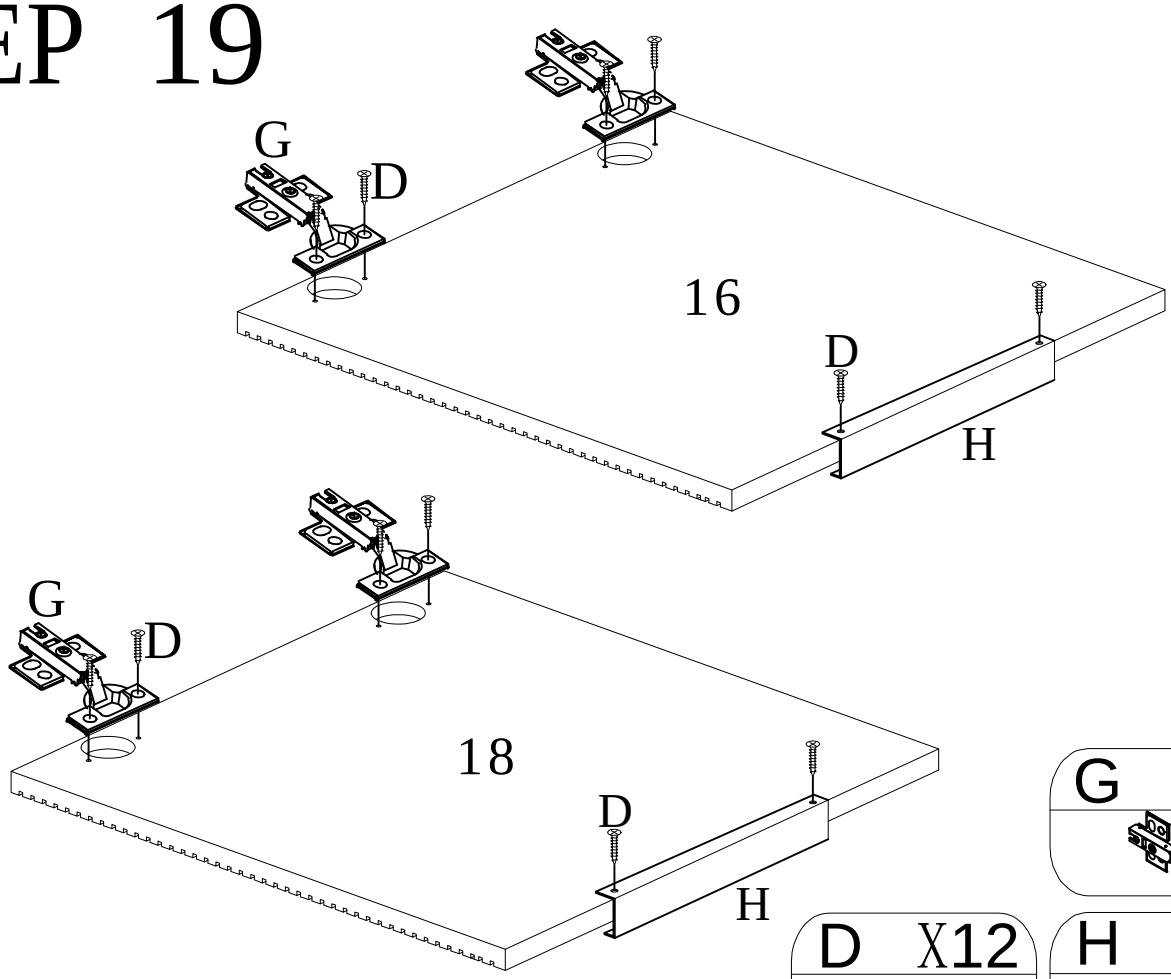

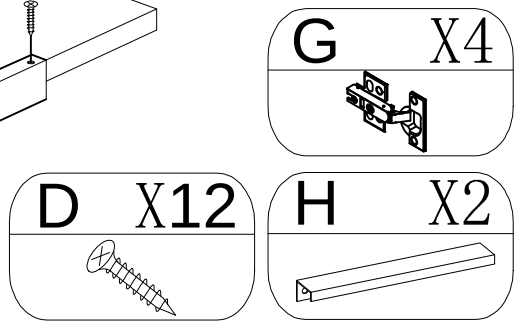

STEP 20

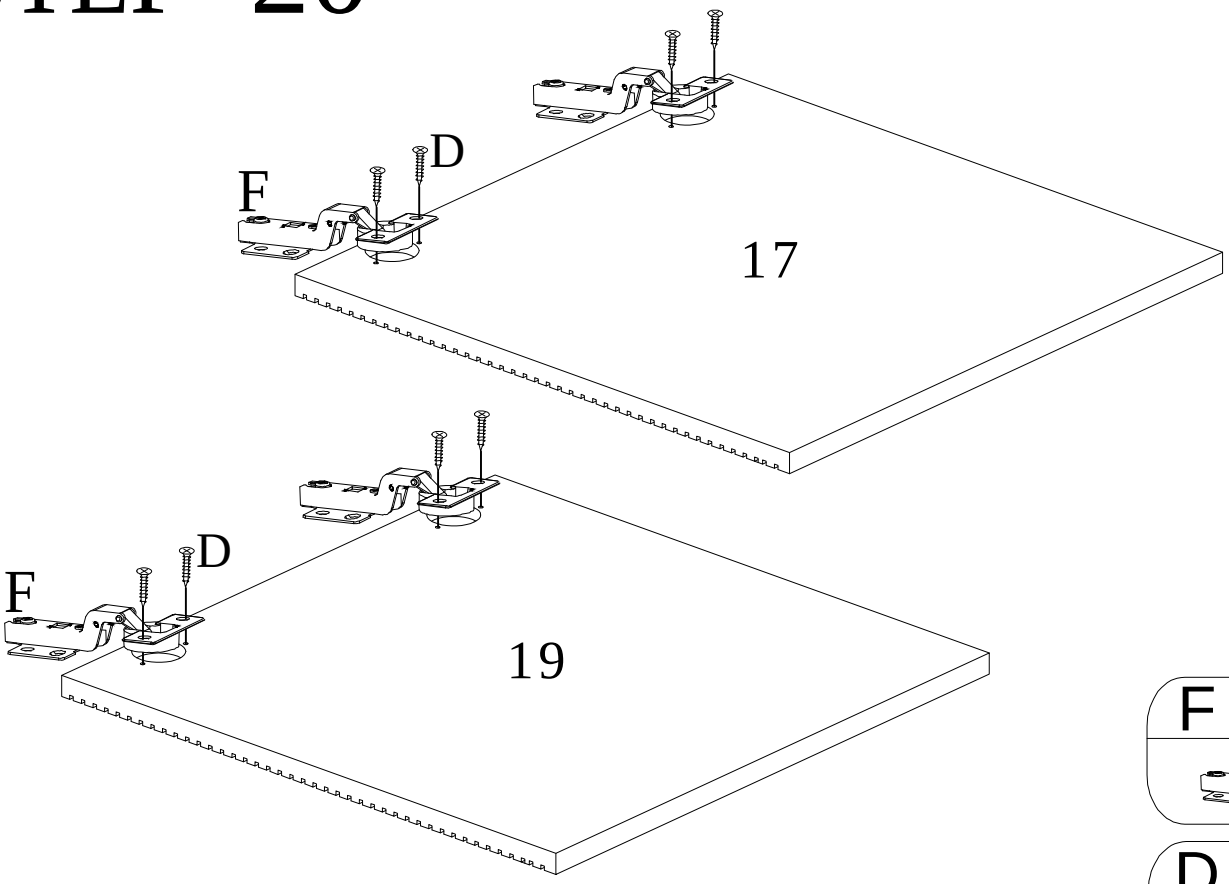

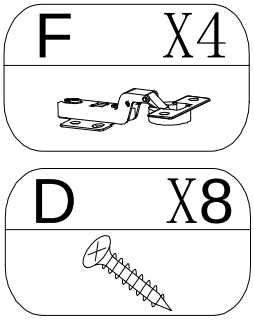

STEP 21

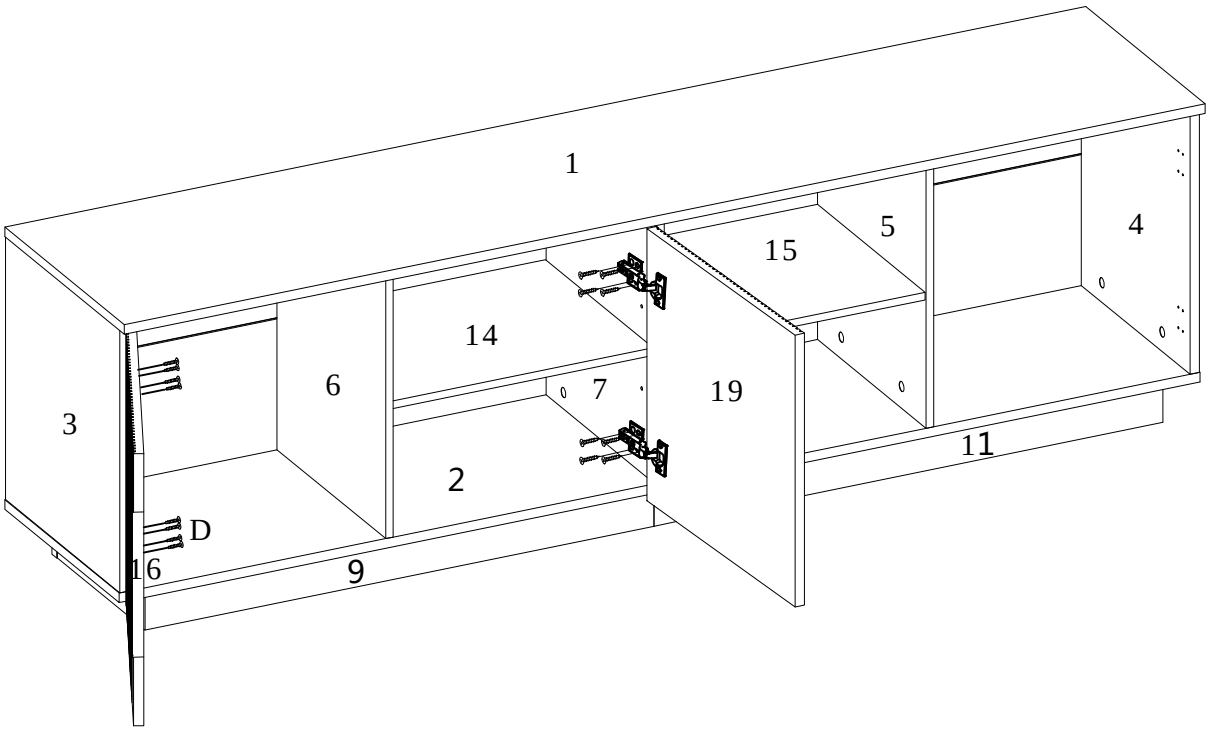

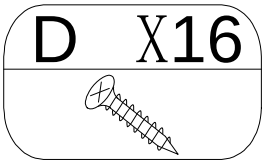

STEP 22

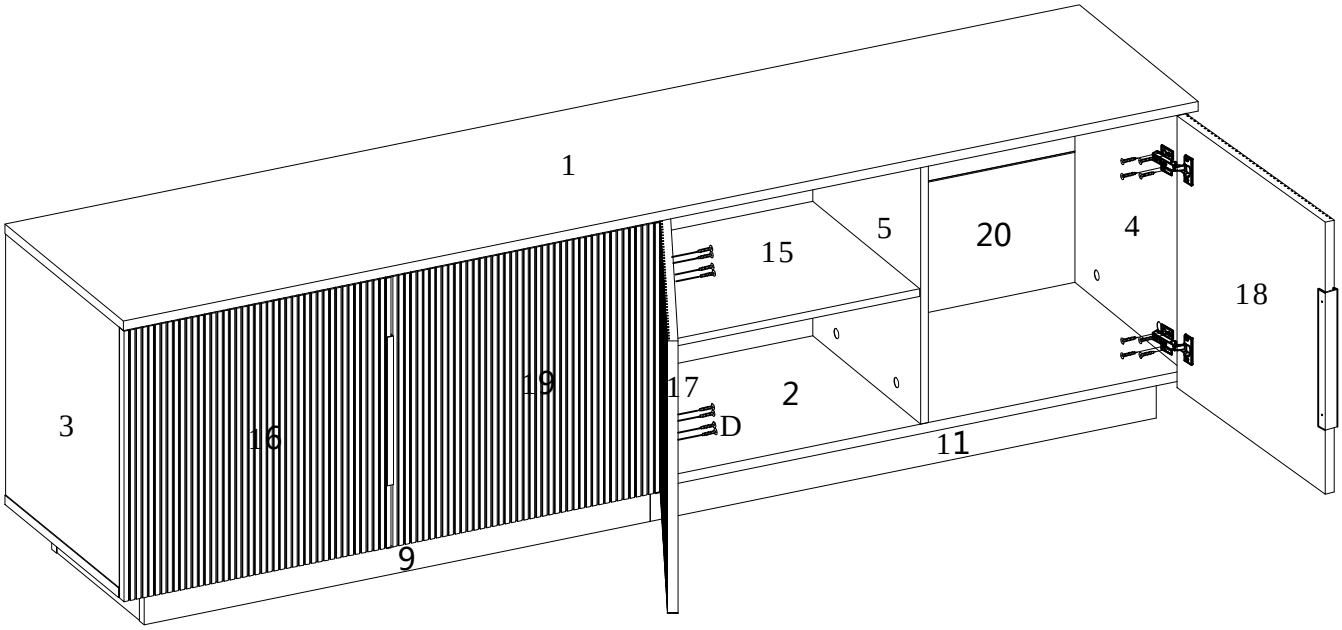

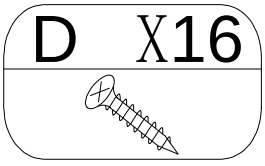

STEP 23

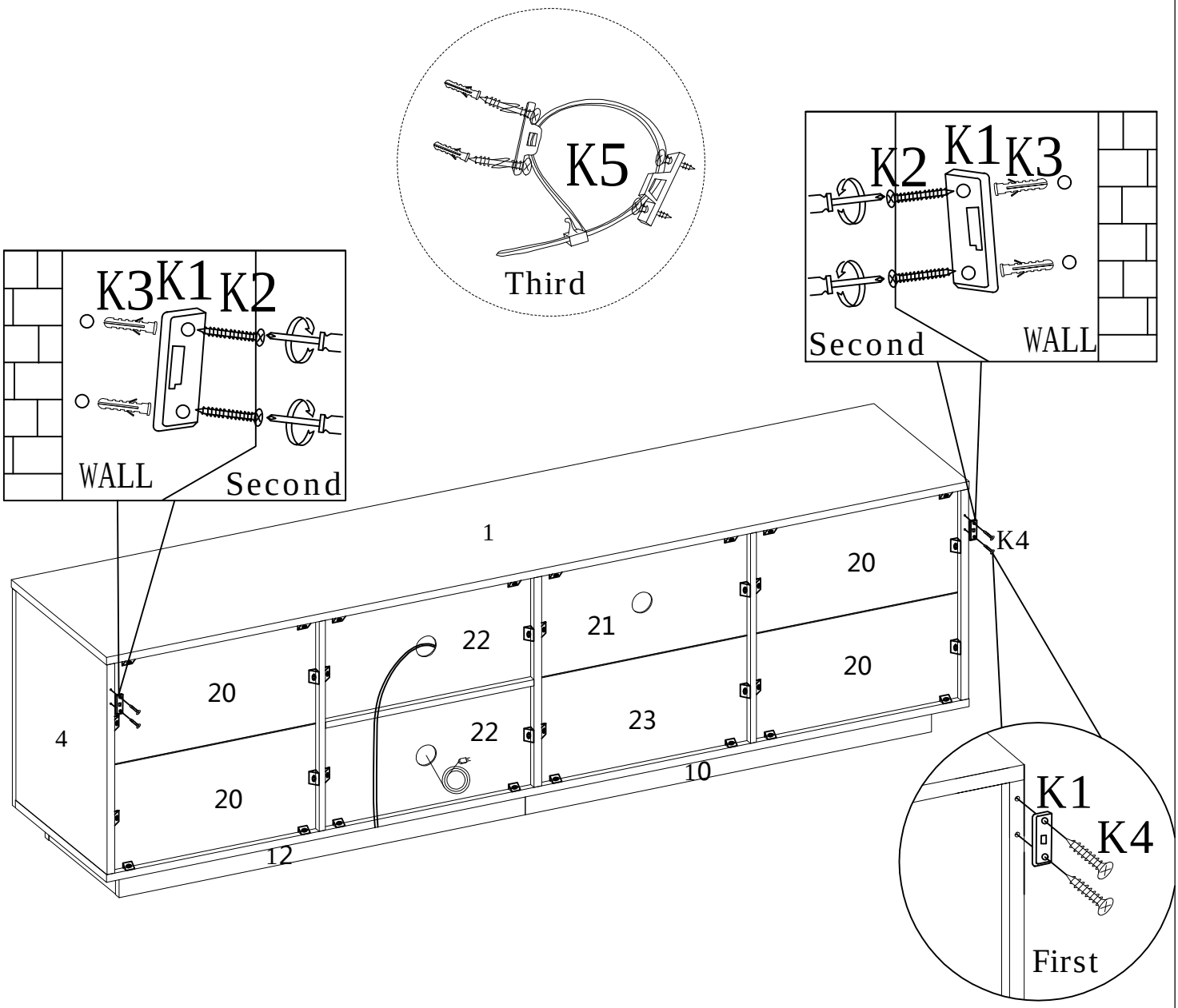
K5
Third
K3 K1 K2
WALL
Second
K2 K1 K3
Second
WALL
1
K4
20
21
22
20
20
4
22
23
10
20
12
K1
K4
First

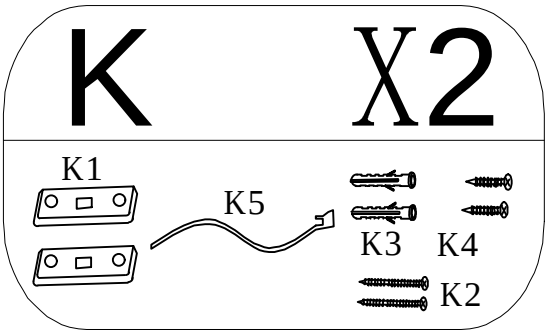
K X2
K1
K5
K3 K4
K2

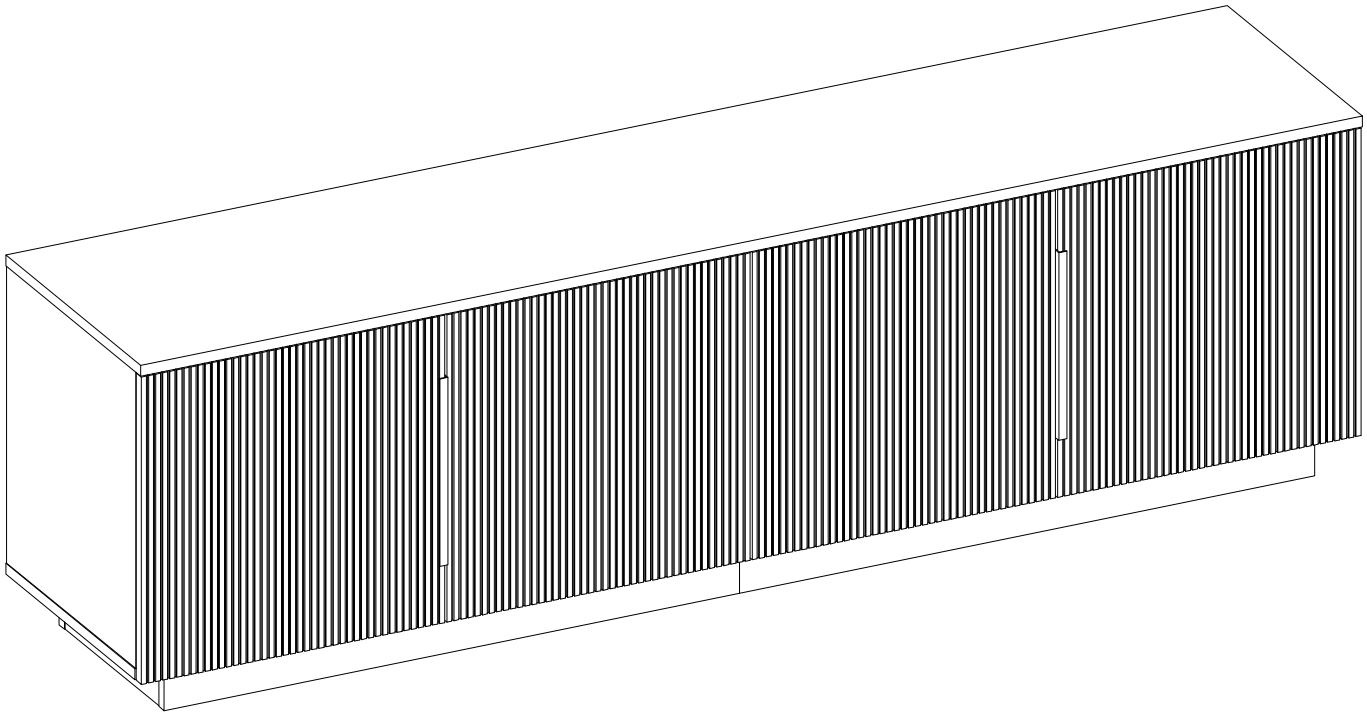

END

IMPORTANT-READ CAREFULLY-RETAIN FOR FUTURE REFERENCE

WARNING:

- Children must stay away from the assembly zone, preventing children from potential asphyxia because of plastic bag and foam breathing in nose;
- For your safety, please do not tread or climb product.
- The loading weight shall be within the range that vendor claims. The product is designed for adults use, domestic use and indor use only.
- The product shall not combine with other product for use.
- If the product with seat height adjustnnents with energy accumulators that only trained personnel may replace or repair seat height adjustment components with energy accumulators
- Check regularly that all assembly fastenings are properly tightened, do not use the product if any structural part is broken or missing
- Incorrect installation and incorrect use can cause accidents. Please completely follow the guidance of assembly instruction.

Security instructions:

- Before assembling check whether all parts listedl in the parts list have been delivered. Do not start assembling if parts are missing or damaged.
- A failure to assemble this product correctly could cause damage or result in serious injury! Before assembling make sure that you have enough space for the procedure. Assemble on a flat surface.
- Keep the assembly instructions available at alltimes and follow each of the individual steps exactly.
- During assembly, be careful with all the partsof the assembly (do not walk on them or distort them) and beware of shearing and trapping risks. Keep children and pets away while setting up the furniture.