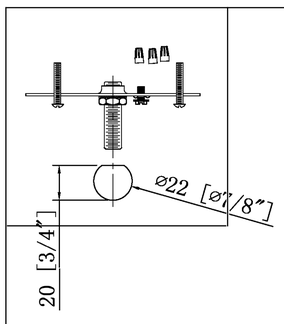
ø22 [ø7/8"]
20 [3/4"]

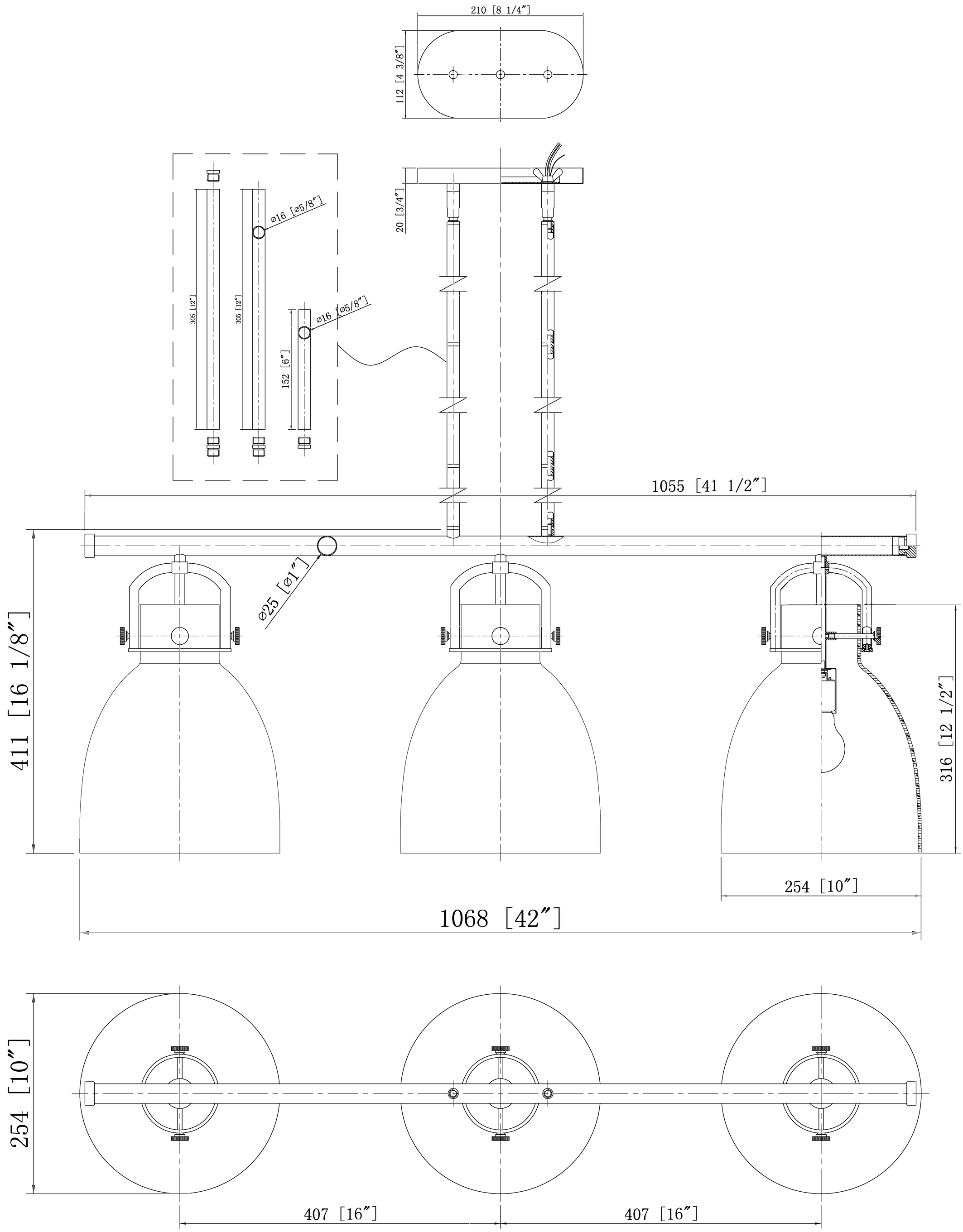
210 [8 1/4"]
112 [4 3/8"]
ø16 [ø5/8"]
305 [12"]
305 [12"]
ø16 [ø5/8"]
152 [6"]
20 [3/4"]
1055 [41 1/2"]
ø25 [ø1"]
411 [16 1/8"]
316 [12 1/2"]
254 [10"]
1068 [42"]
254 [10"]
407 [16"]
407 [16"]

ITEM: