GARDEN SHED 8x4FT

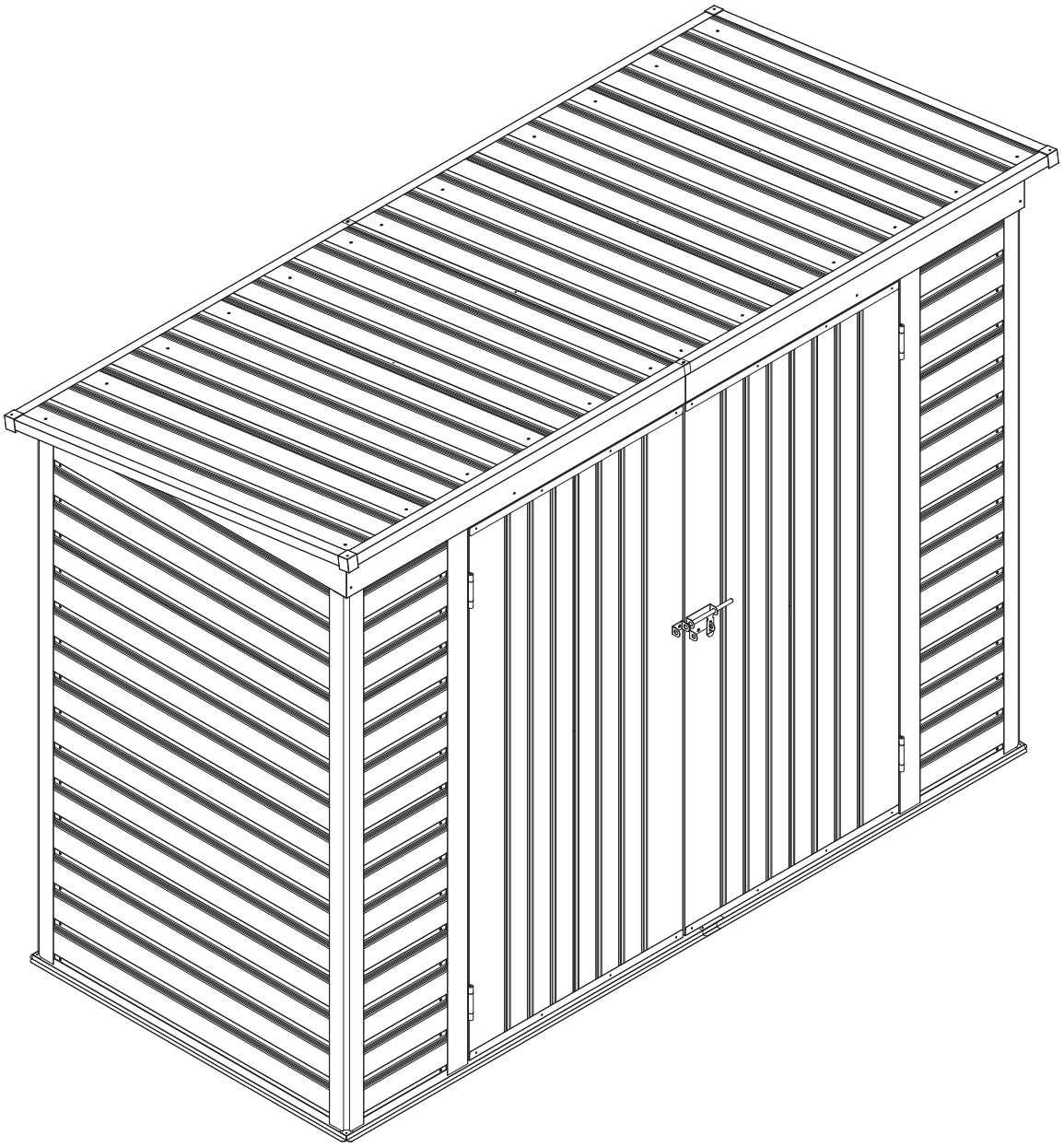

ASSEMBLY INSTRUCTIONS

Requires two people and takes 2-3 hours for Installation.

WARNING

Please read the instruction manual carefully before assembly.
Please assembly strictly in accordance with the instrution.
Please double-check to ensure that all parts of the package contents intact.
To avoid injury, work gloves are recommended during assembly.

BEFORE YOU BEGIN

Owner's Manual
Before beginning construction, check local building codes regarding footings, location and other requirements. Study and understand this owner's manual. Important information and helpful tips will make your construction easier and more enjoyable.
Assembly Instructions: Instructions are supplied in this manual and contain all appropriate information for your building model. Review all instructions before you begin, and during assembly, follow the step sequence carefully for correct results.
Parts and Parts List: Check to be sure that you have all the necessary parts, you're your building.
Separate contents of the carton by the part number while reviewing parts list.
The first few steps show how to join related parts to make larger sub assemblies which will be used later.
Familiarize yourself with the hardware and fasteners for easier use during construction.
These are packaged within the carton. Note that extra fasteners have been supplied for your convenience.

PLAN AHEAD

Watch the Weather: Be sure the day you select to install your building is dry and calm. Do not attempt to assemble your building on a windy day. Be careful on wet or muddy ground.
Teamwork: Whenever possible, two or more people should work together to assemble your building. One person can position parts or panels while the other is able to handle the fasteners and the tools.
Tools and Materials: These are some basic tools and materials you will need for the construction of your building. Decide which method of anchoring and the type of foundation you wish to use in order to form a complete list of the materials you will need.

CARE & MAINTENANCE

Finish: For long lasting finish, periodically clean and wax the exterior surface. Touch-up scratches as soon as you notice them on your unit. Immediately clean the area with a wire brush; wash it and apply touch-up paint per manufacturer's recommendation.
Roof: Keep roof clear of leaves and snow with long handled, soft-bristled broom. Heavy amounts of snow on roof can damage building making it unsafe to enter. In snow country, Roof Strengthening Kits are available for most Arrow Buildings for added protection against heavy snow accumulation.
Doors: Always keep the door tracks clear of dirt and other debris that prevent them from sliding easily. Lubricate door track annually with furniture polish or silicone spray. Keep doors closed and locked to prevent wind damage
Fasteners: Use all washers supplied to protect against weather infiltration and to protect the metal from being scratched by screws. Regularly check your building for loose screws, bolts, nuts, etc. and retighten them as necessary.
Moisture: A plastic sheet (vapor barrier) placed under the entire floor area with good ventilation will reduce condensation.
Other Tips....
Wash off inked part numbers on coated panels with soap and water.
Silicone caulking may be used for watertight seals throughout the building.
Do not store swimming pool chemicals in your building. Combustibles and corrosives must be stored in air tight approved containers.

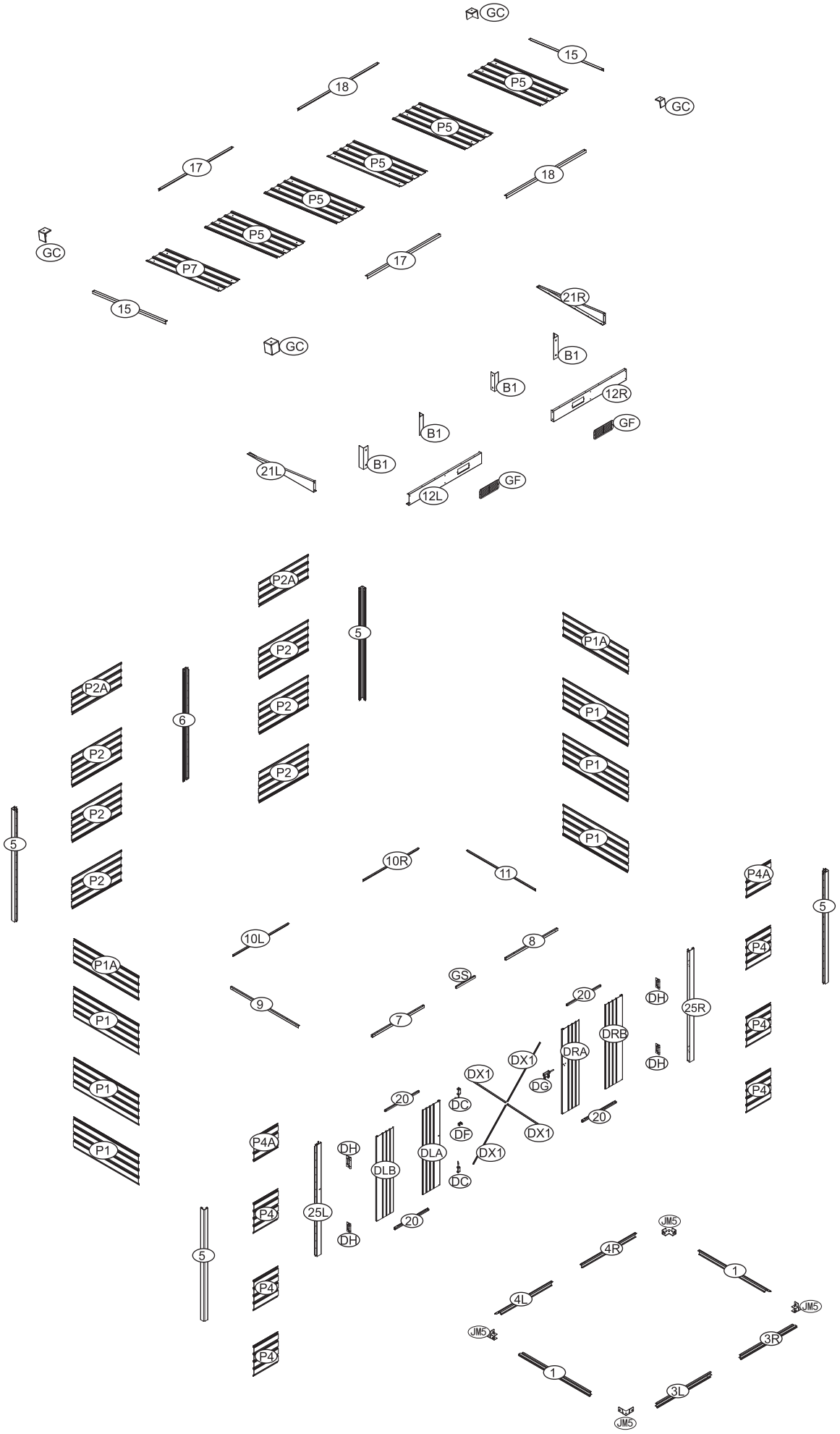
GC
15
18
P5
GC
P5
17
P5
18
P5
GC
P5
P7
17
15
21R
GC
B1
B1
12R
GF
B1
21L
B1
12L
GF
P2A
5
P2
P1A
P2A
6
P2
P1
P2
P1
P2
5
P1
P2
10R
11
P4A
5
10L
8
P4
P1A
GS
9
20
DH
25R
P1
7
DRB
P4
DX1
DRA
DH
DX1
DG
P1
20
DC
P4
DF
20
P1
P4A
DH
DLA
DX1
DLB
DC
P4
25L
20
JM5
DH
5
4R
1
P4
4L
JM5
JM5
3R
P4
1
3L
JM5

PARTS LIST

NO.	PART	Qty.
1		2
3L	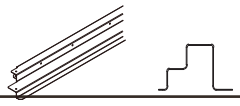	1
3R	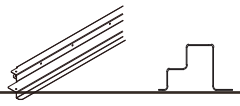	1
4L	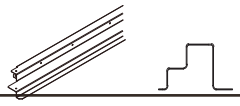	1
4R	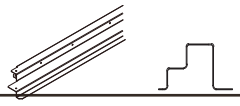	1
5		4
6		1
P1	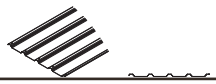	6
P1A		2
P2		6
P2A		2
P4		6
P4A	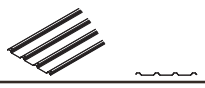	2

NO.	PART	Qty.
25L		1
25R	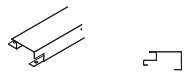	1
7		1
8		1
9	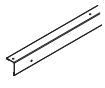	1
10L	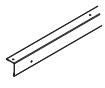	1
10R	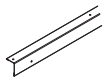	1
11	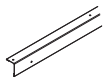	1
GS	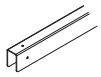	1
DRA	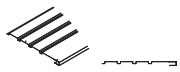	1
DRB		1
DX1		4
DLA		1
DLB		1

PARTS LIST

NO.	PART	Qty.
B1	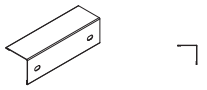	4
12L	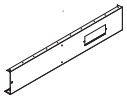	1
12R	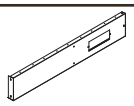	1
P5		5
P7	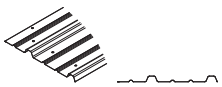	1
21L	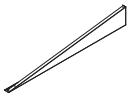	1
21R	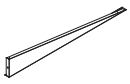	1
15		2
17		2
18		2
GC		4
DC		2
DF		1

NO.	PART	Qty.
DH		4
20		4
DG	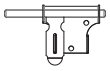	1
F1		304
F2		12
F3		32
F4		5
S2		270
S1		244
JM5	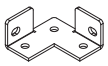	4
GF		2
F6	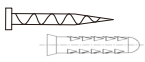	4

PART	NO.	Qty.
	F1	12

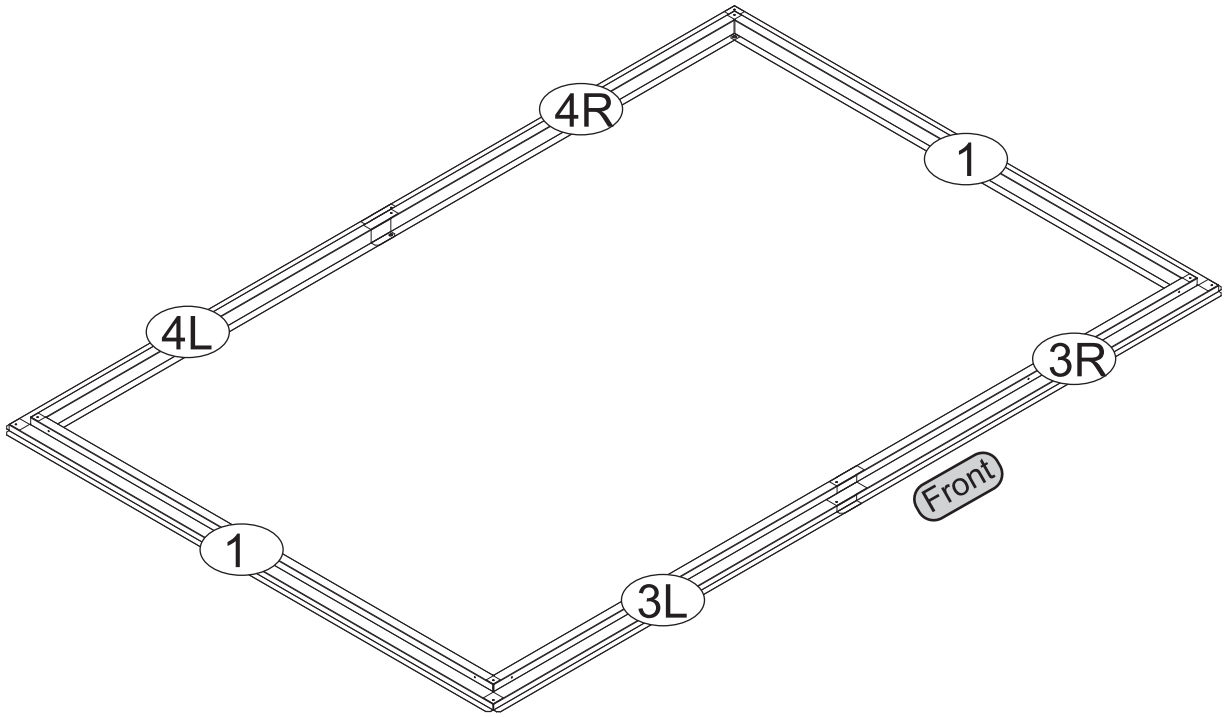

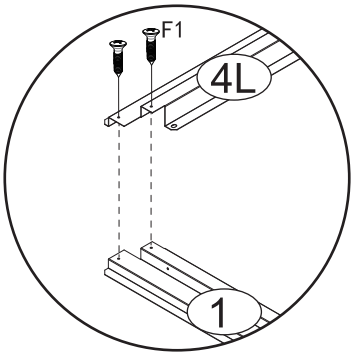

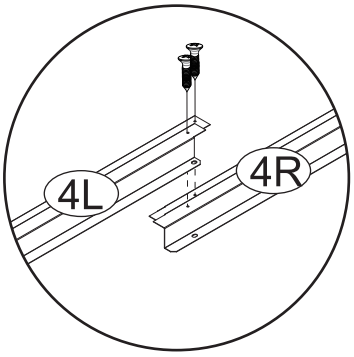

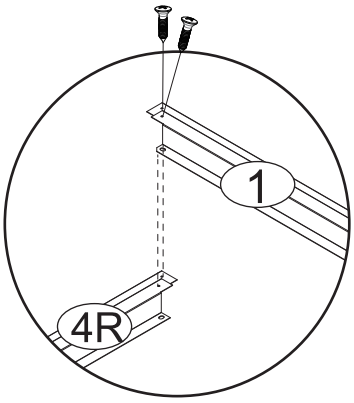

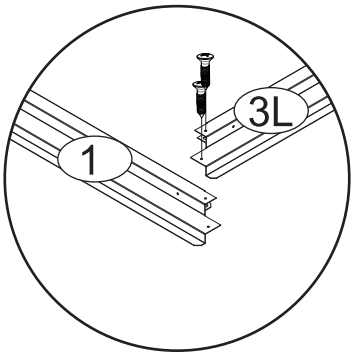

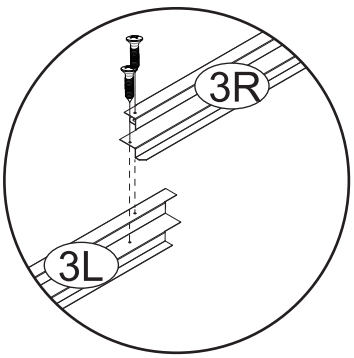

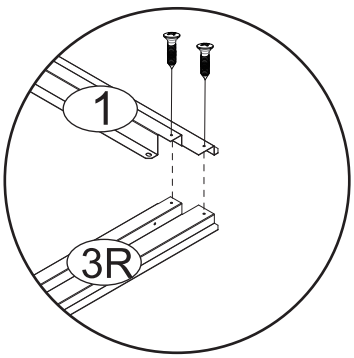

02

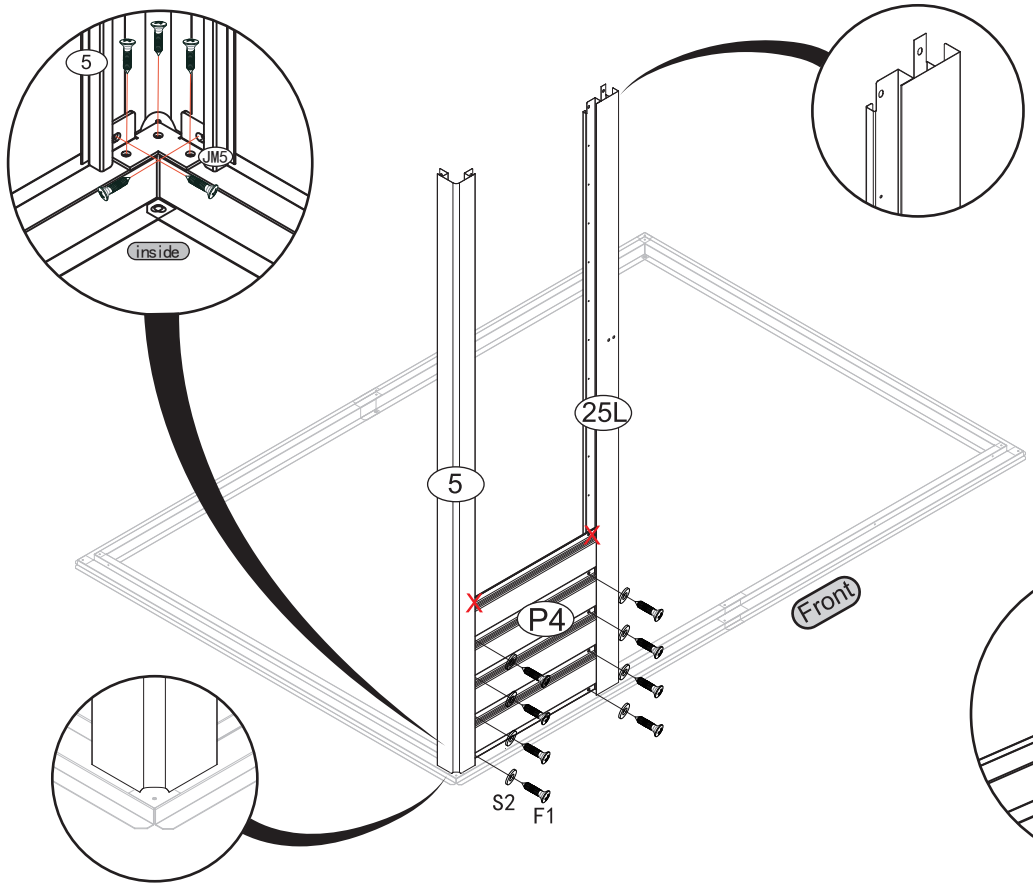

PART	NO.	Qty.
	5	1
	25L	1
	P4	1
	JM5	1
	F1	14
	S2	9

03

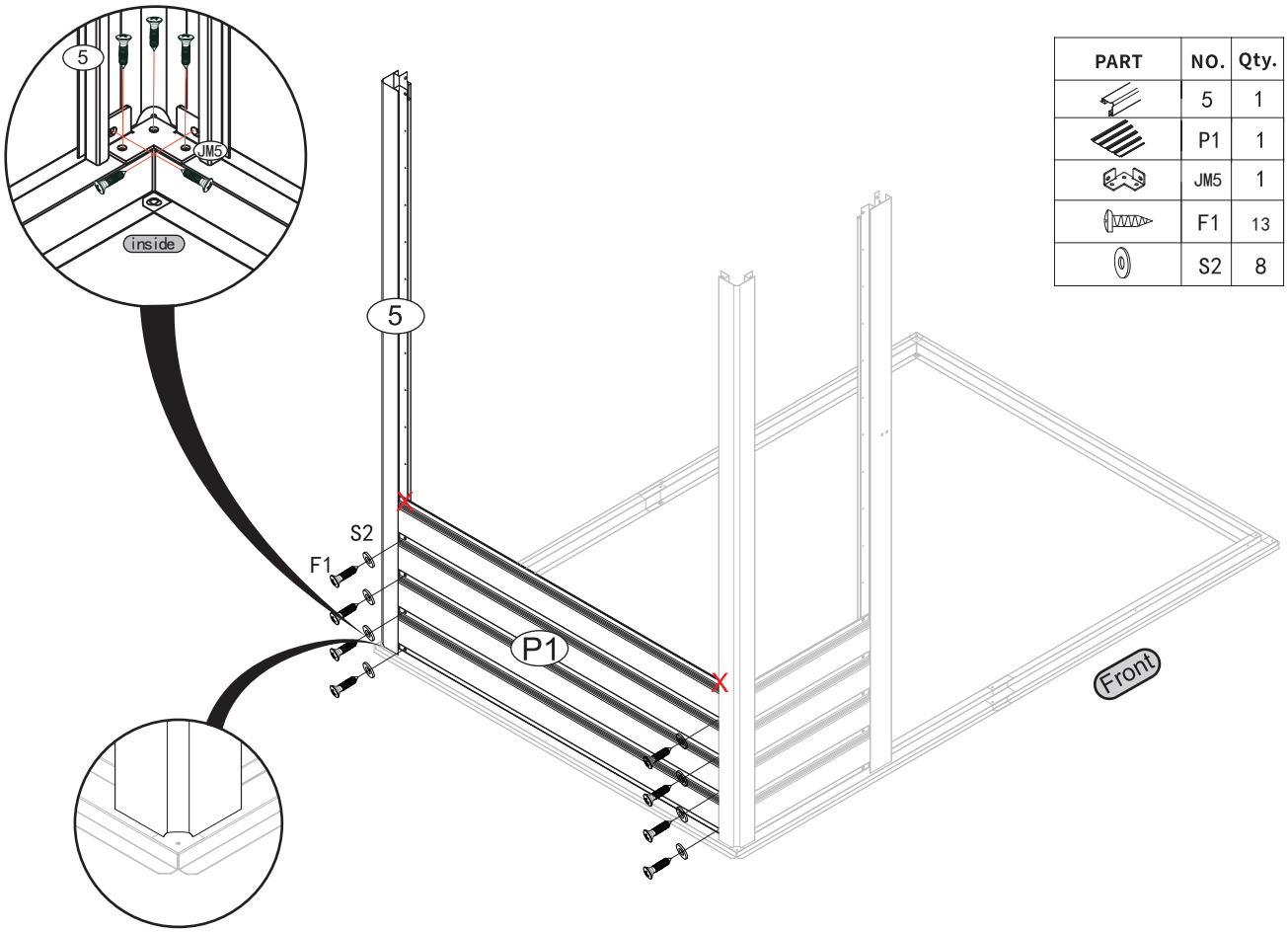

PART	NO.	Qty.
	5	1
	P1	1
	JM5	1
	F1	13
	S2	8

04

PART	NO.	Qty.
	6	1
	P2	1
	F1	8
	S2	8

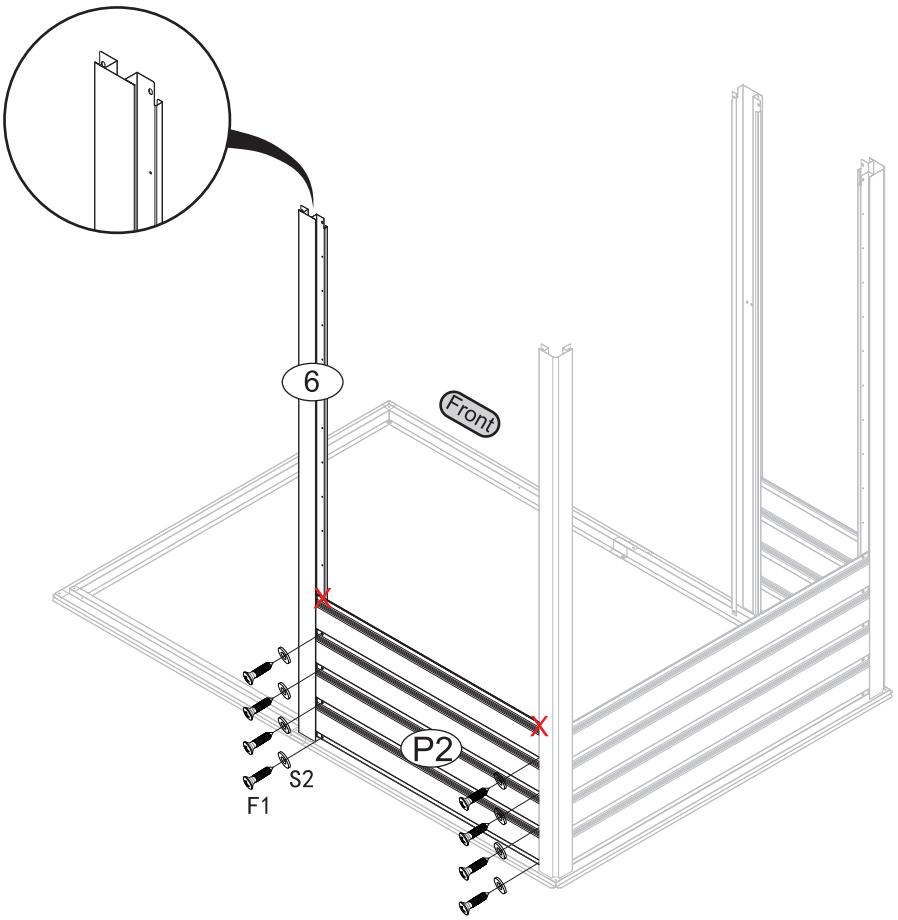

05

PART	NO.	Qty.
	5	1
	P2	1
	JM5	1
	F1	13
	S2	8

06

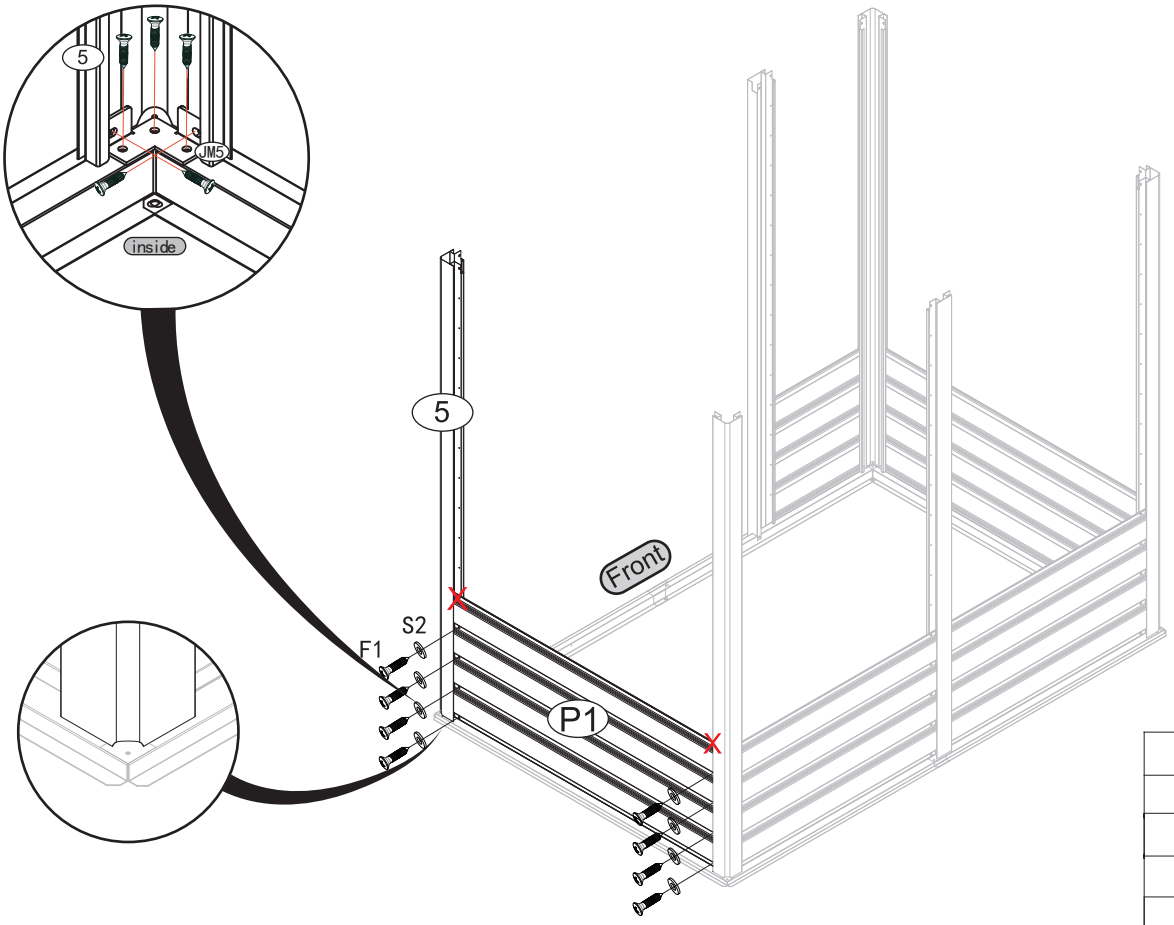

PART	NO.	Qty.
	5	1
	P1	1
	JM5	1
	F1	13
	S2	8

07

PART	NO.	Qty.
	25R	1
	P4	1
	F1	9
	S2	9

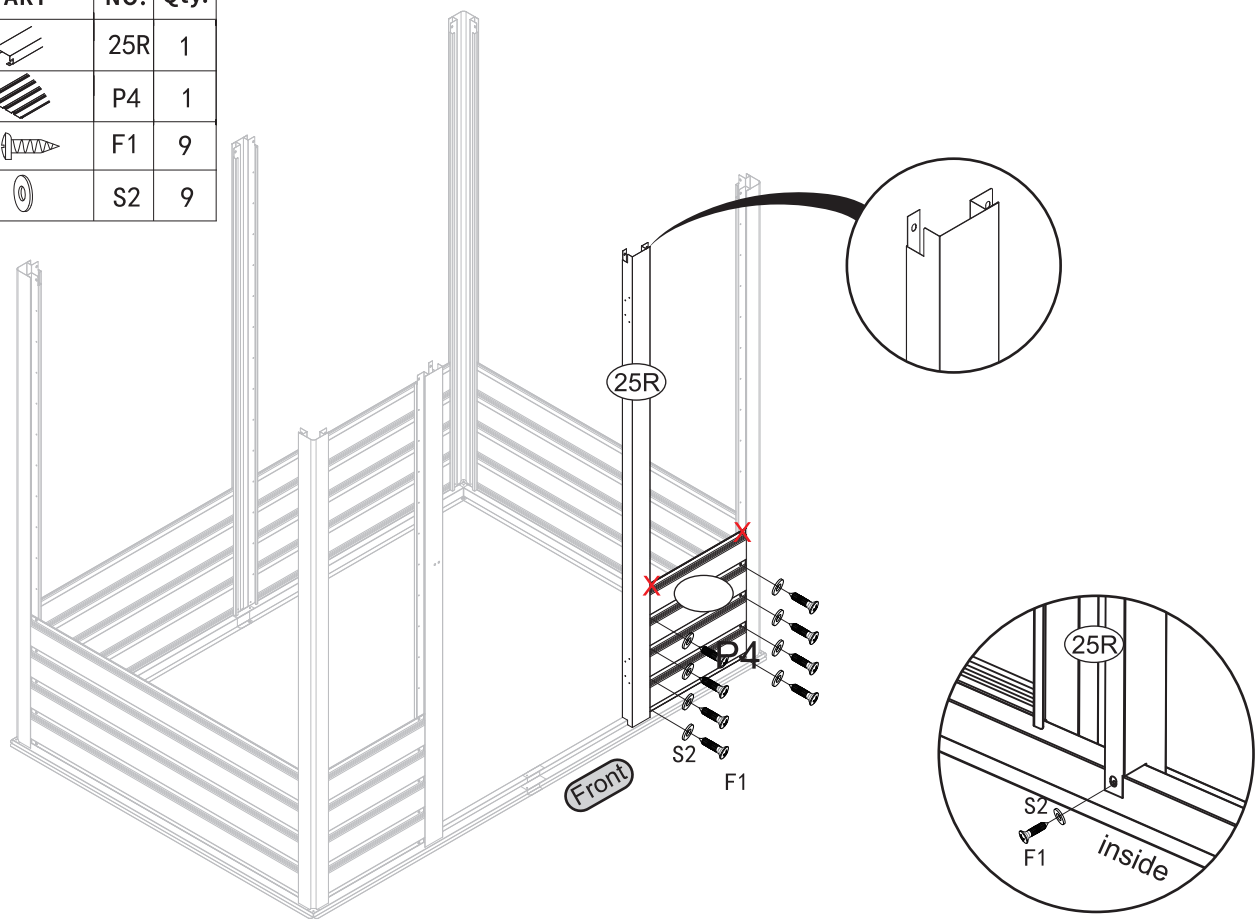

PART	NO.	Qty.
	P1	4
	P2	4
	P4	4
	P1A	2
	P2A	2
	P4A	2
	F1	132
	S2	132

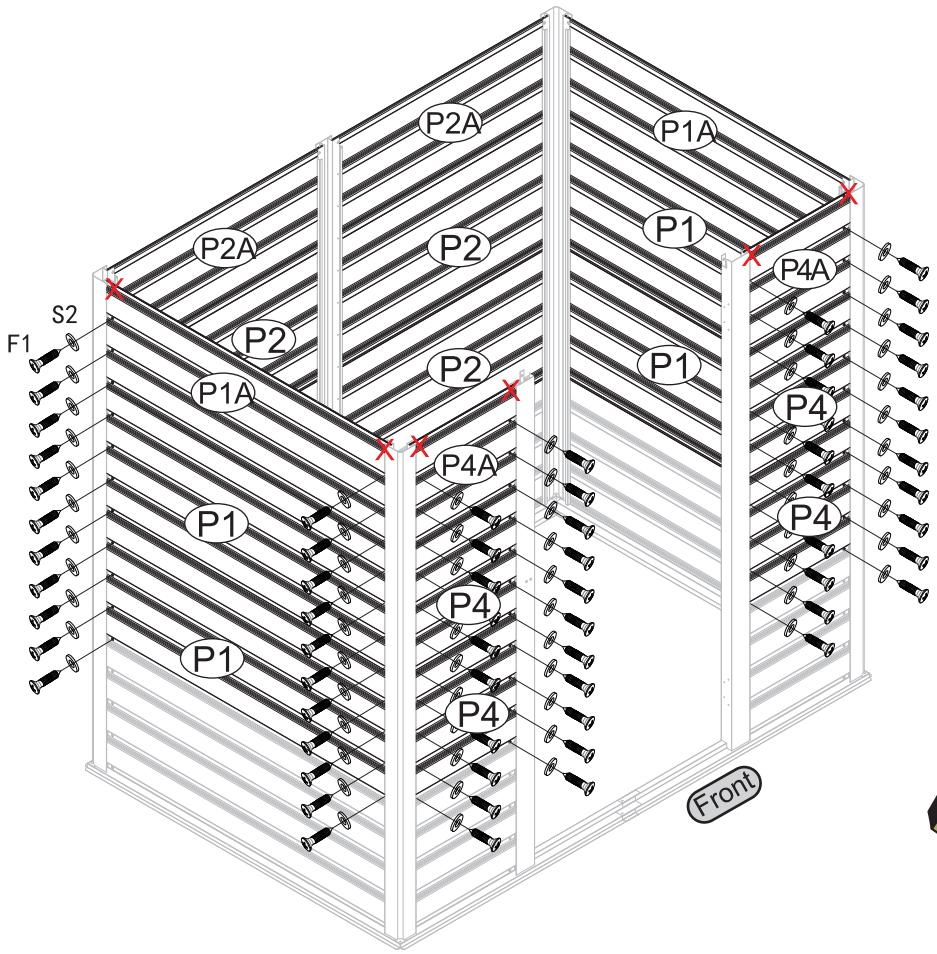

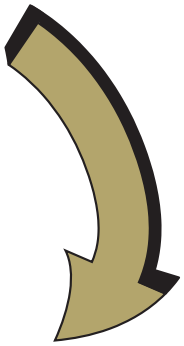

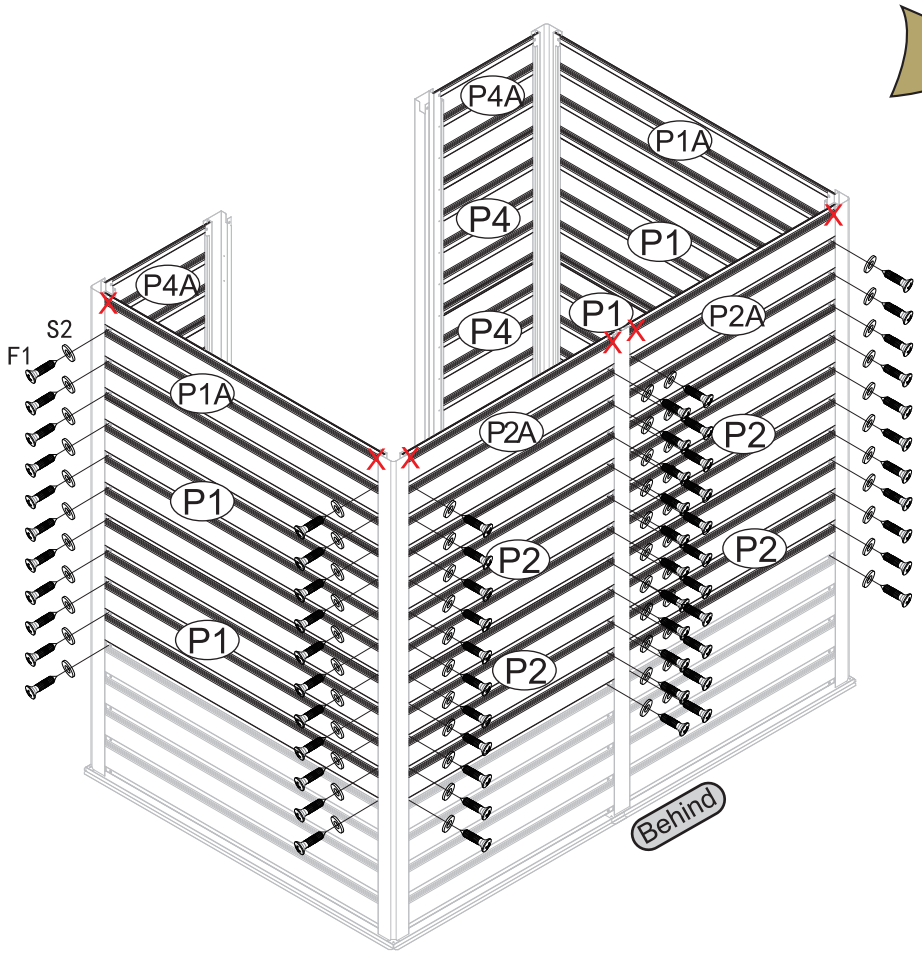

09

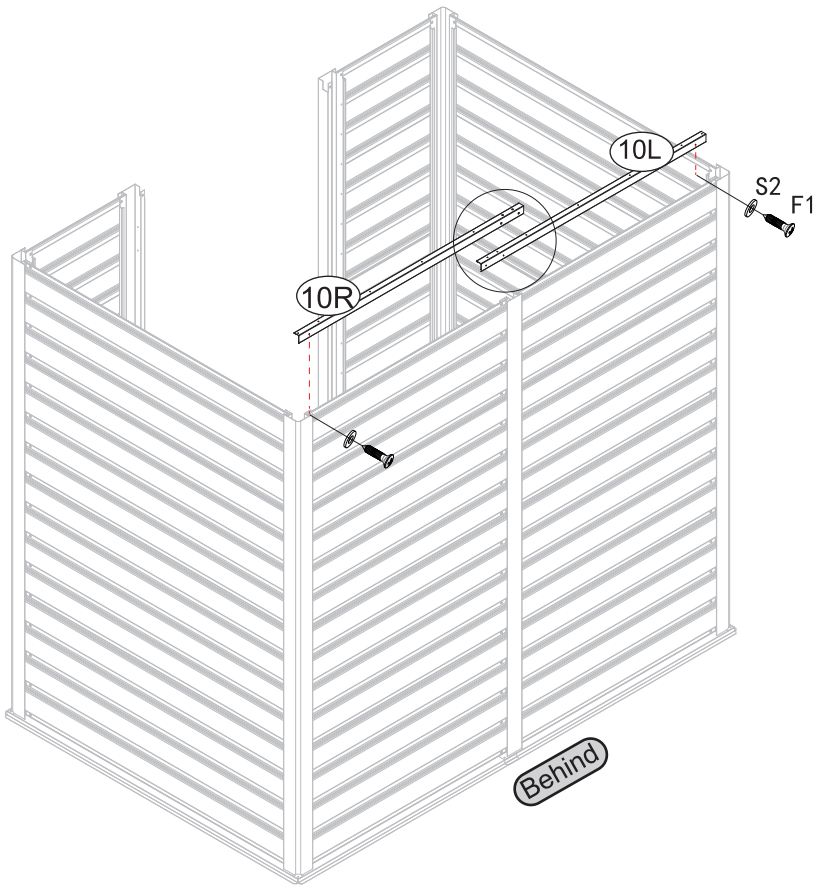

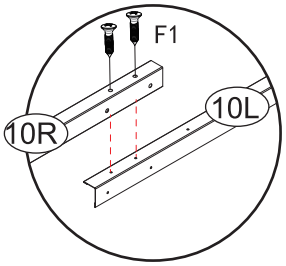

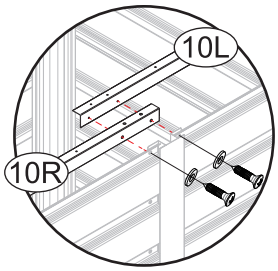

PART	NO.	Qty.
	10L	1
	10R	1
	F1	6
	S2	4

10

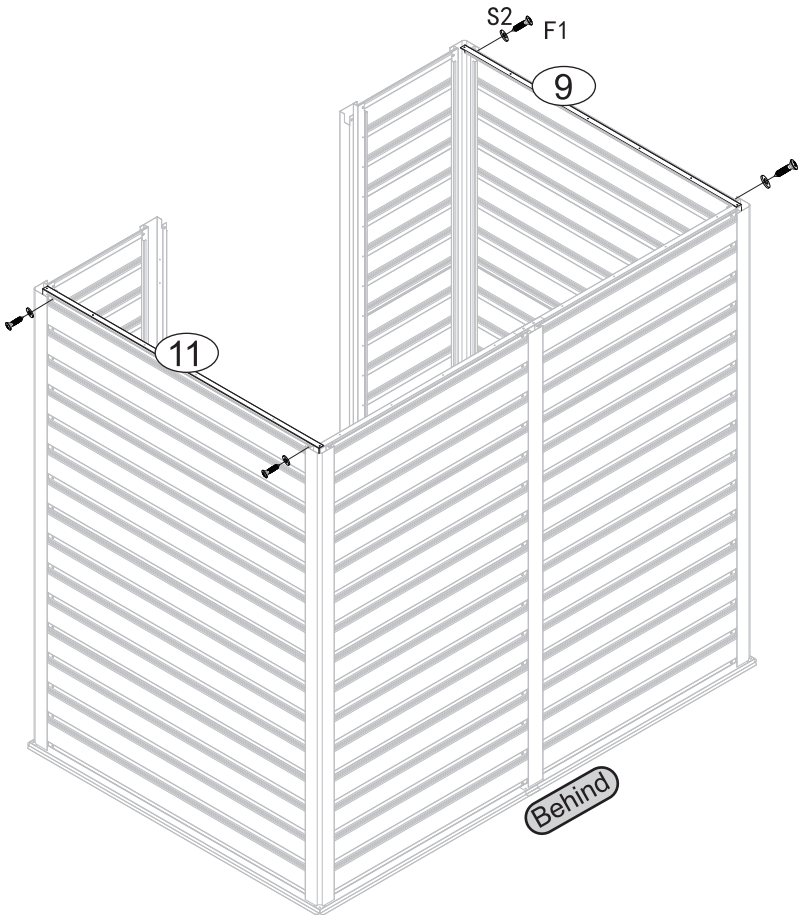

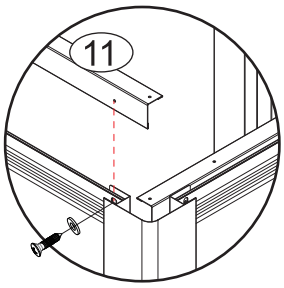

PART	NO.	Qty.
	9	1
	11	1
	F1	4
	S2	4

PART	NO.	Qty.
	7	1
	8	1
	GS	1
	F1	10
	S2	4

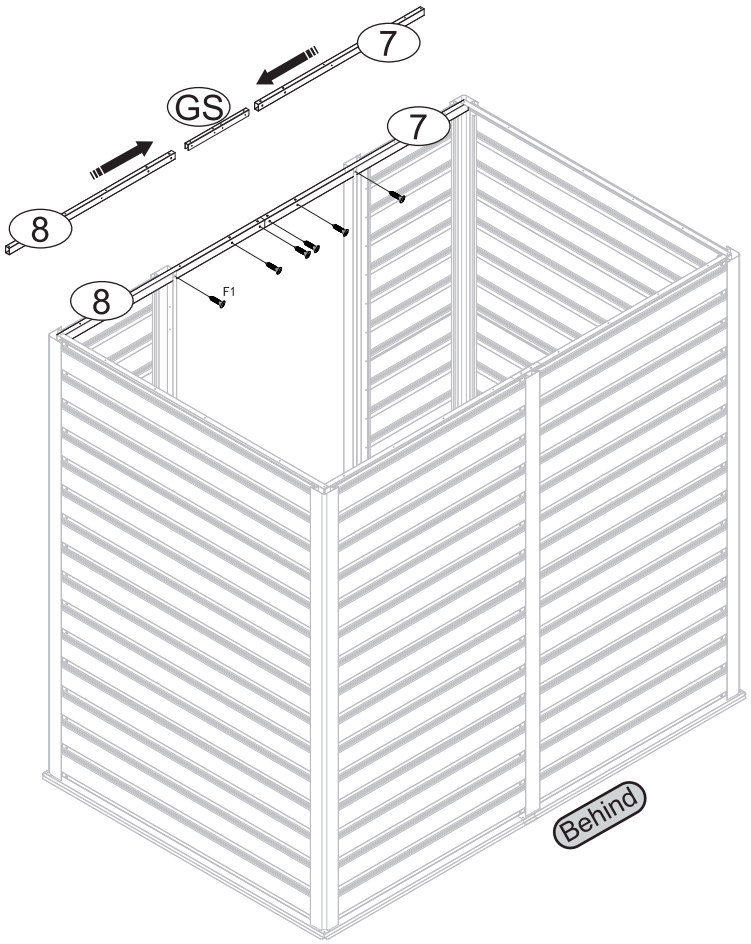

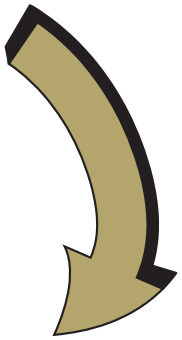

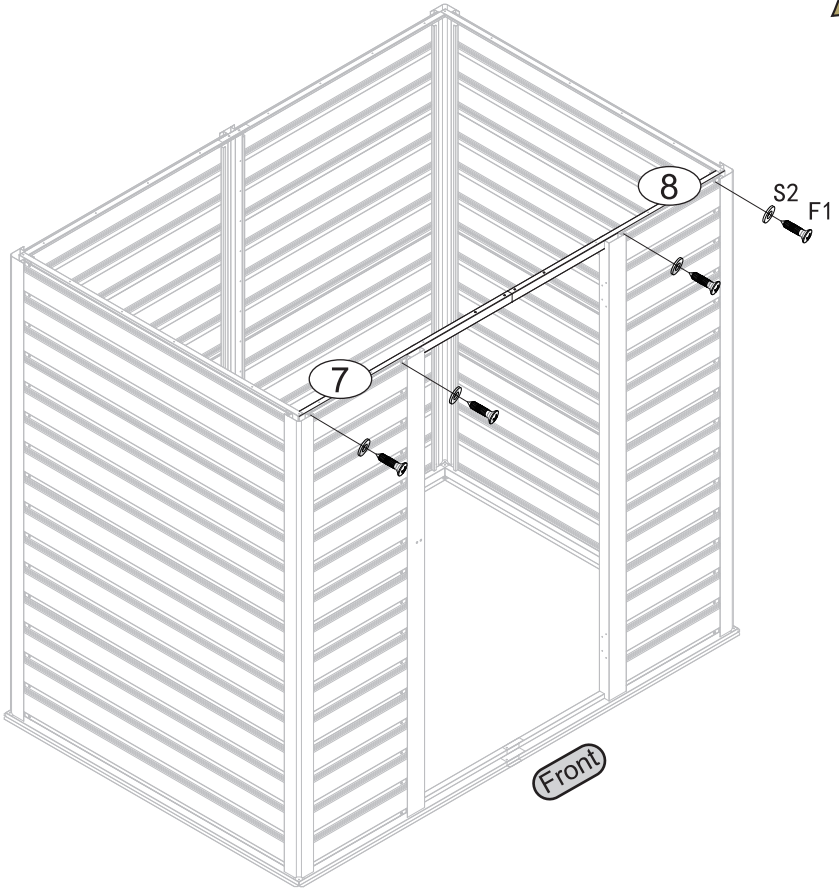

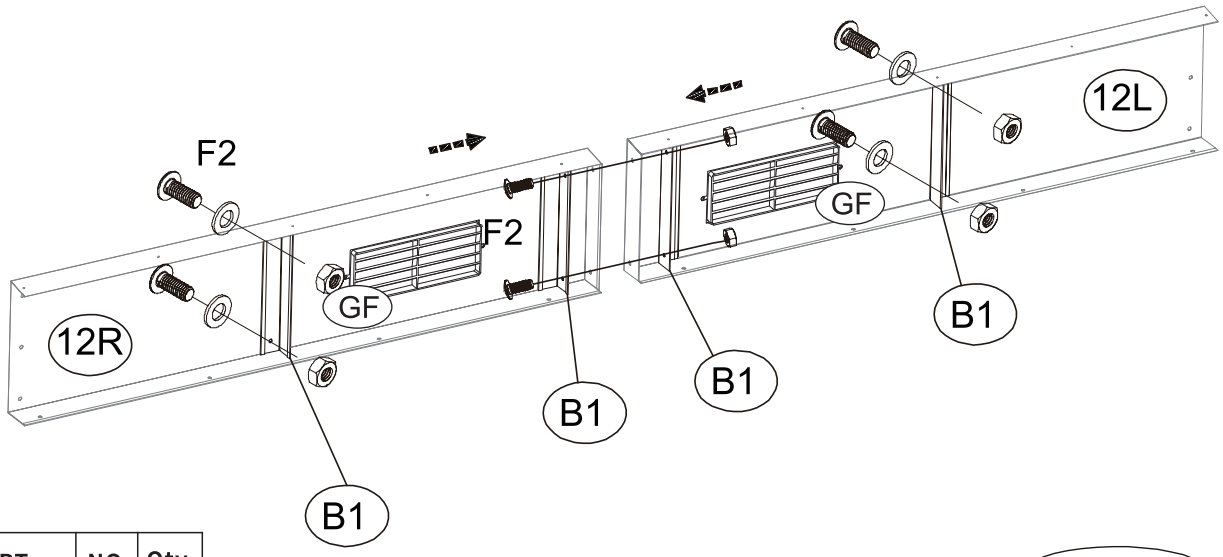

PART	NO.	Qty.
	GF	2
	12L	1
	12R	1
	B1	4
	S2	8
	F2	10

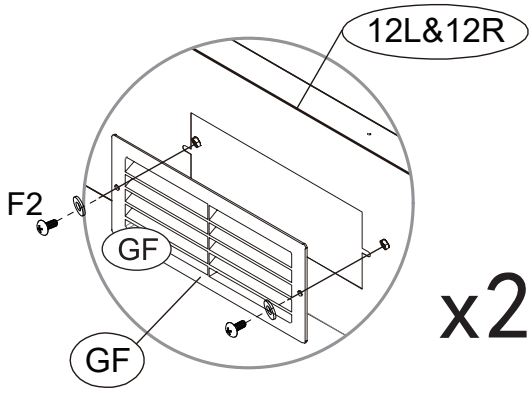

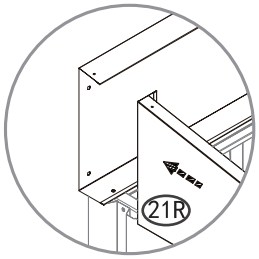

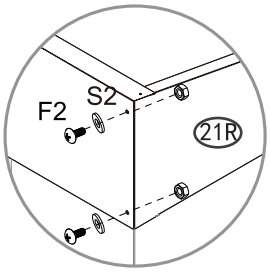

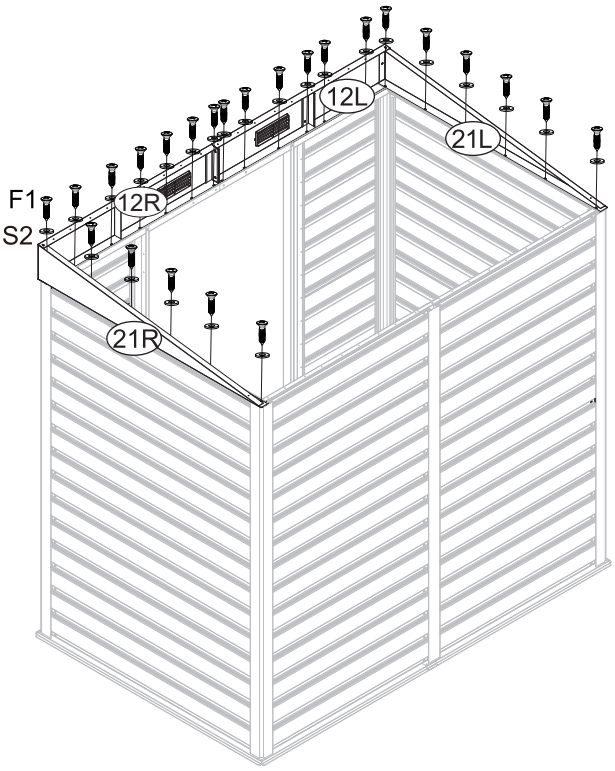

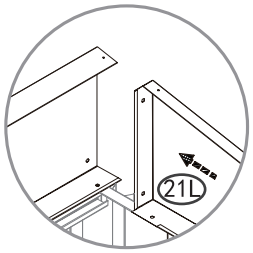

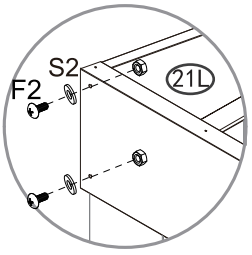

PART	NO.	Qty.
	21L	1
	21R	1
	F1	24
	S2	28
	F2	4

Note: Small hole locations at the four corners

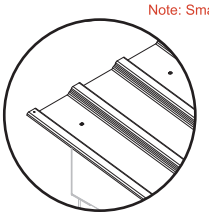

NO.	PART	Qty.
P5		5
P7		1
F1		24
S2		24

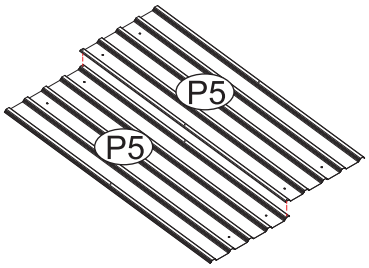

The two small holes should coincide

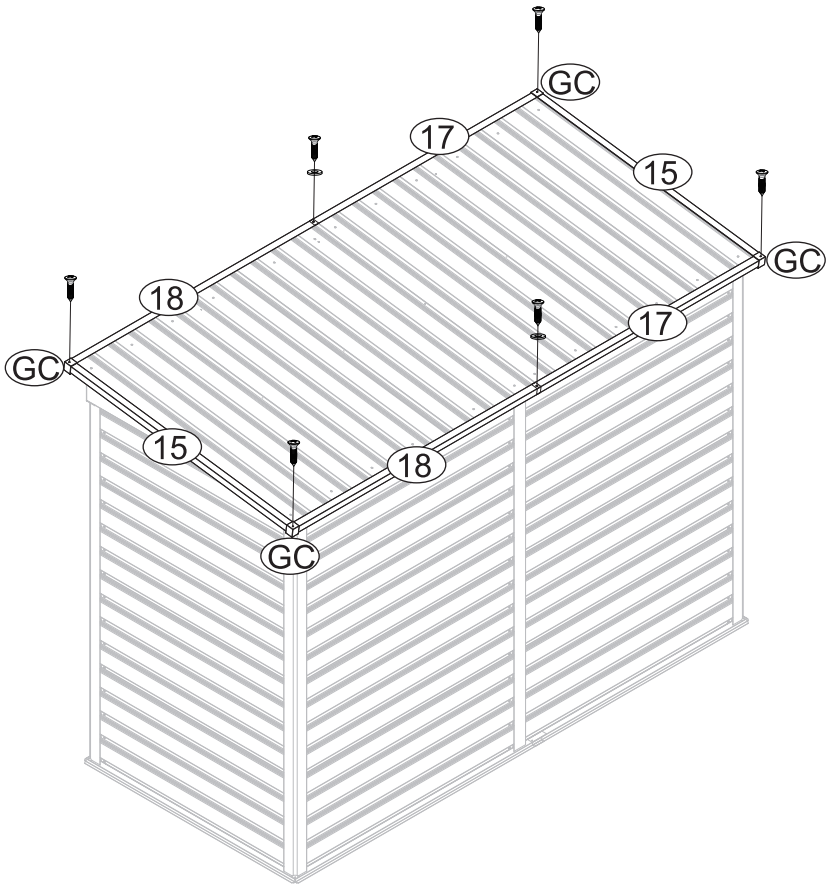

NO.	PART	Qty.
15		2
17		2
18		2
GC		4
F1		6
S2		2

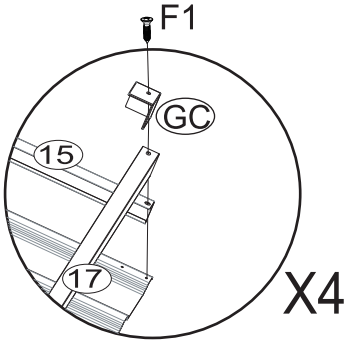

16

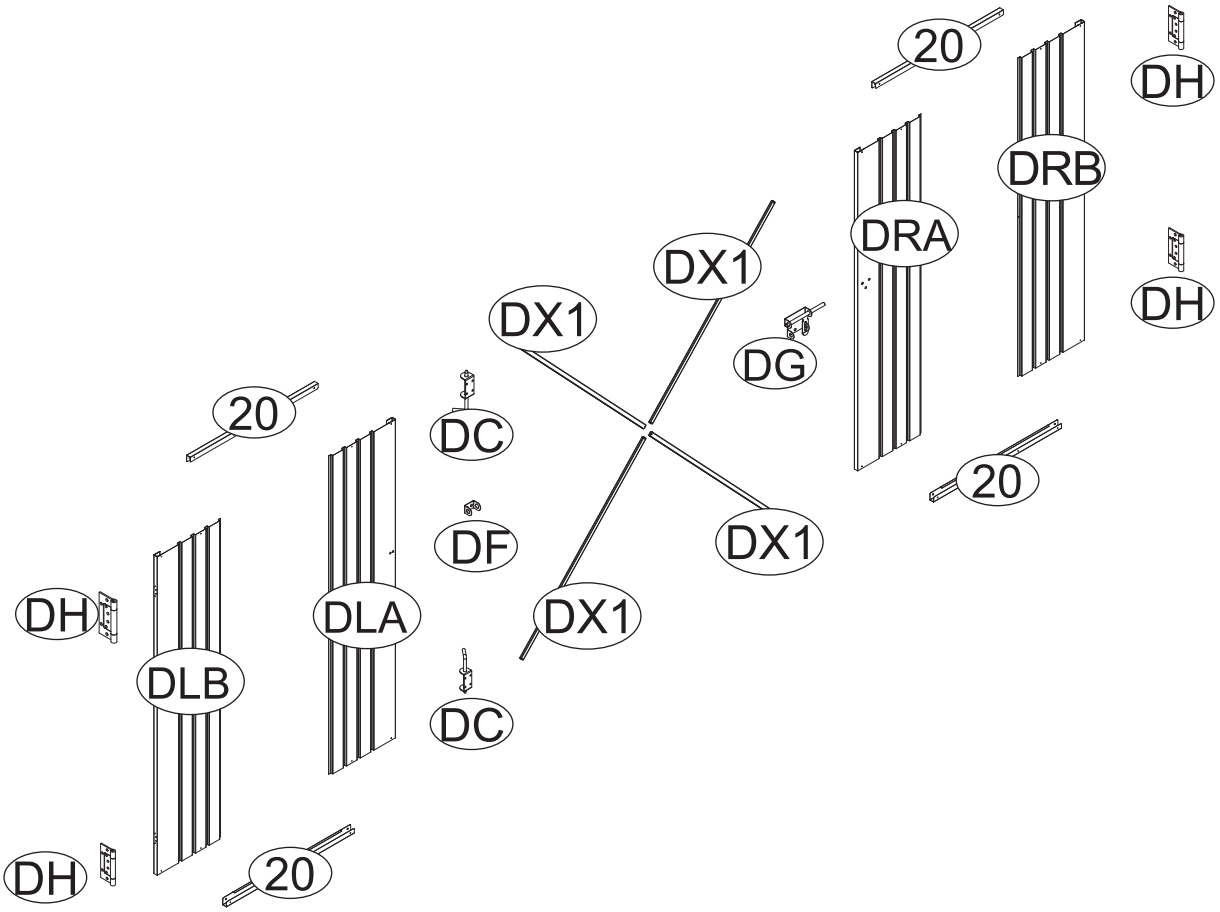
20
DH
DRB
DRA
DX1
DX1
DG
DH
20
DC
DF
DX1
20
DH
DLA
DX1
DLB
DC
DH
20

17

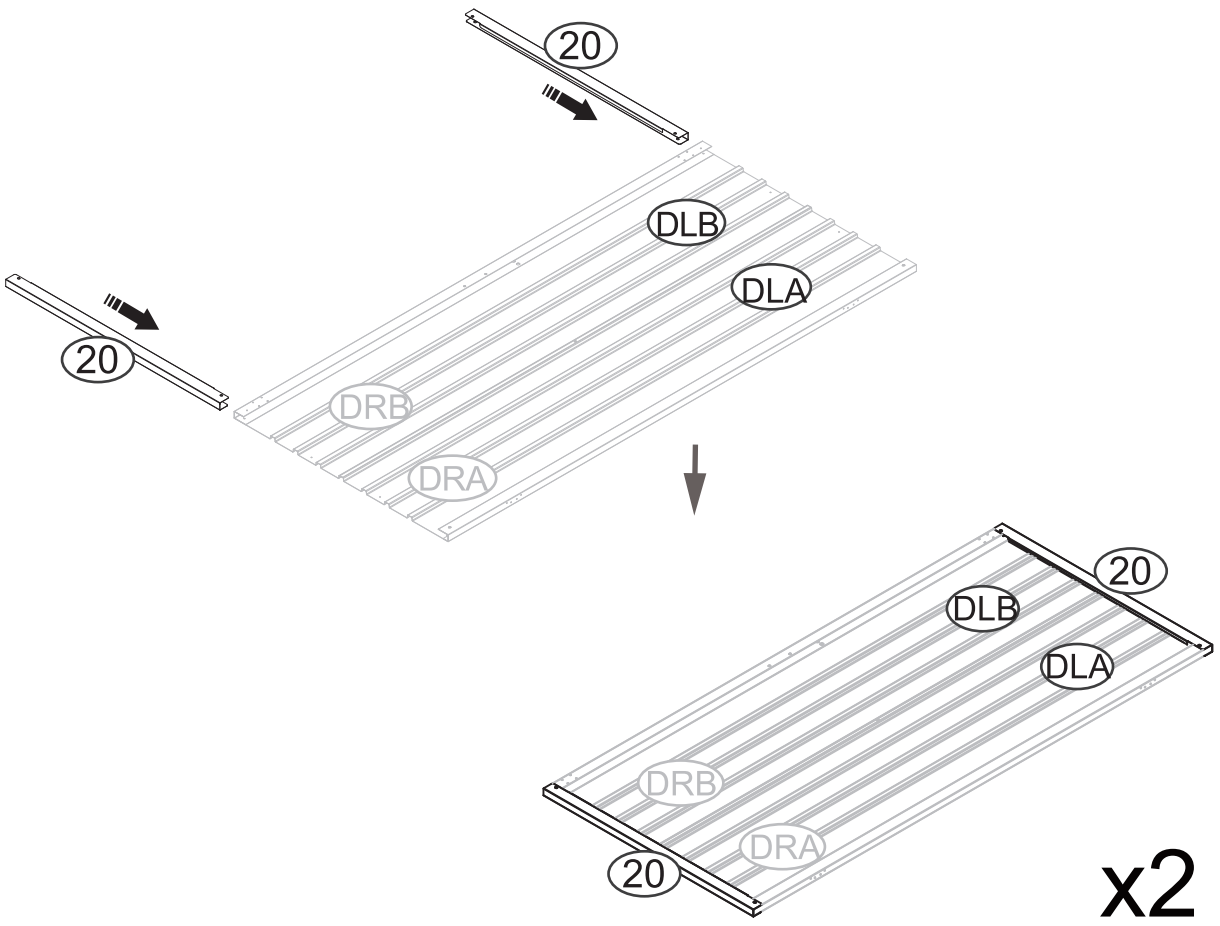
20
DLB
DLA
20
DRB
DRA
20
DLB
DLA
DRB
DRA
20

x2

PART	NO.	Qty.
	F4	2
	F1	22
	F3	8
	S2	9

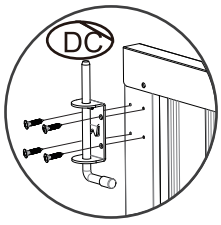

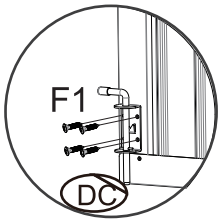

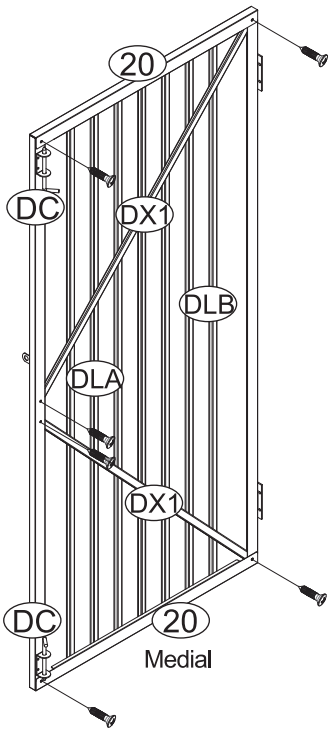

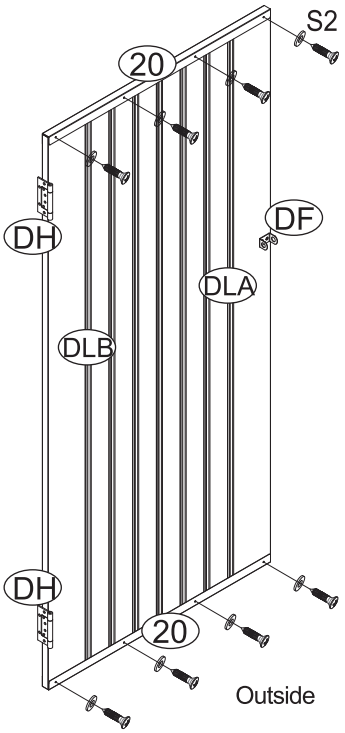

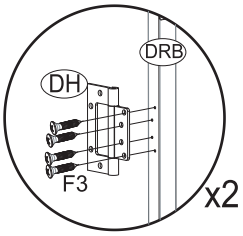

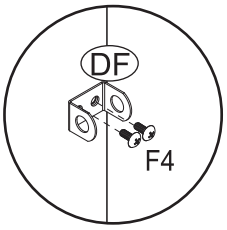

PART	NO.	Qty.
	F4	3
	F1	14
	F3	8
	S2	9

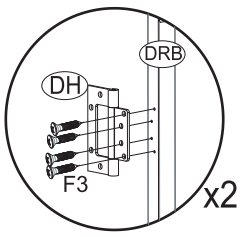

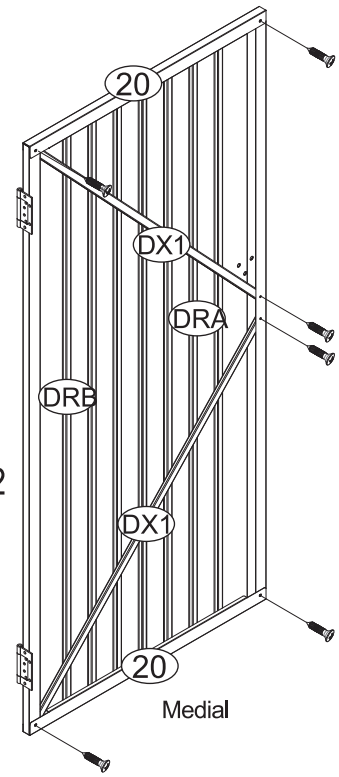

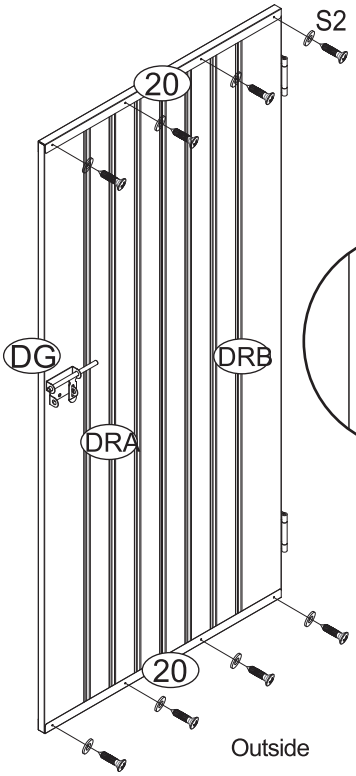

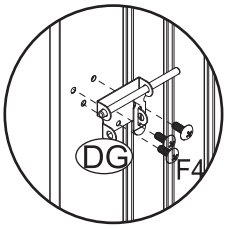

NO.	PART	Qty.
F3		16



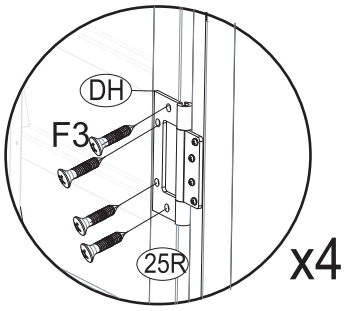

NO.	PART	Qty.
S1		244

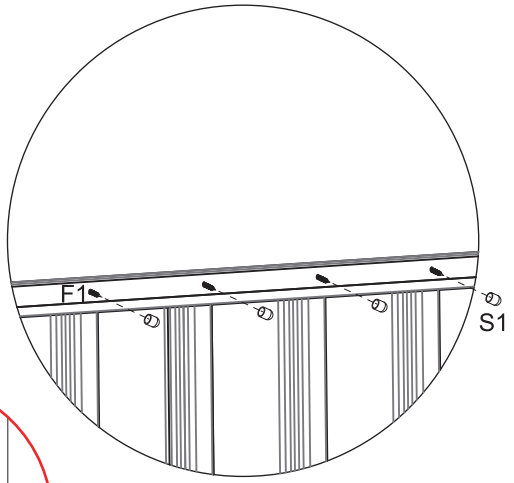

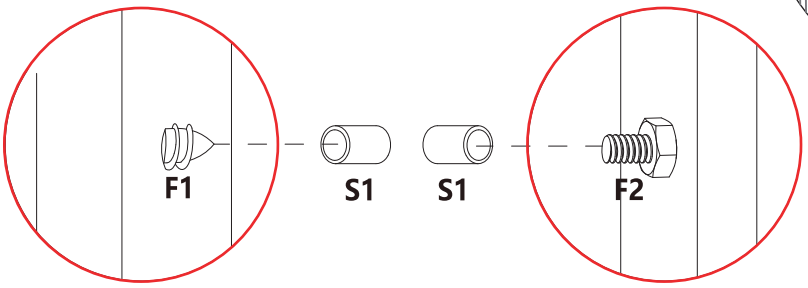

NO.	PART	Qty.
F6	Ø 6x80	4

