ASSEMBLY INSTRUCTION

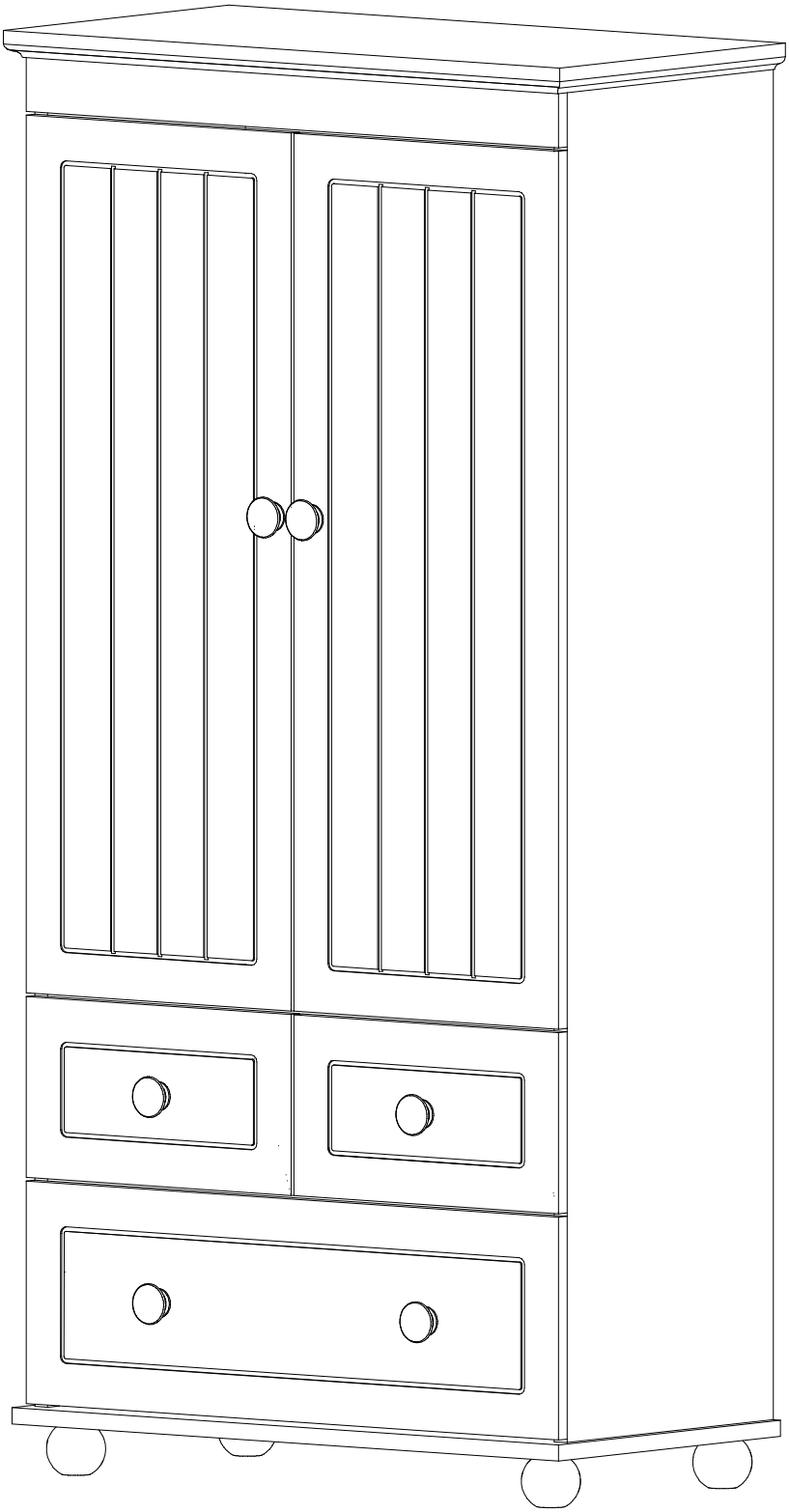

ASSEMBLY INSTRUCTION

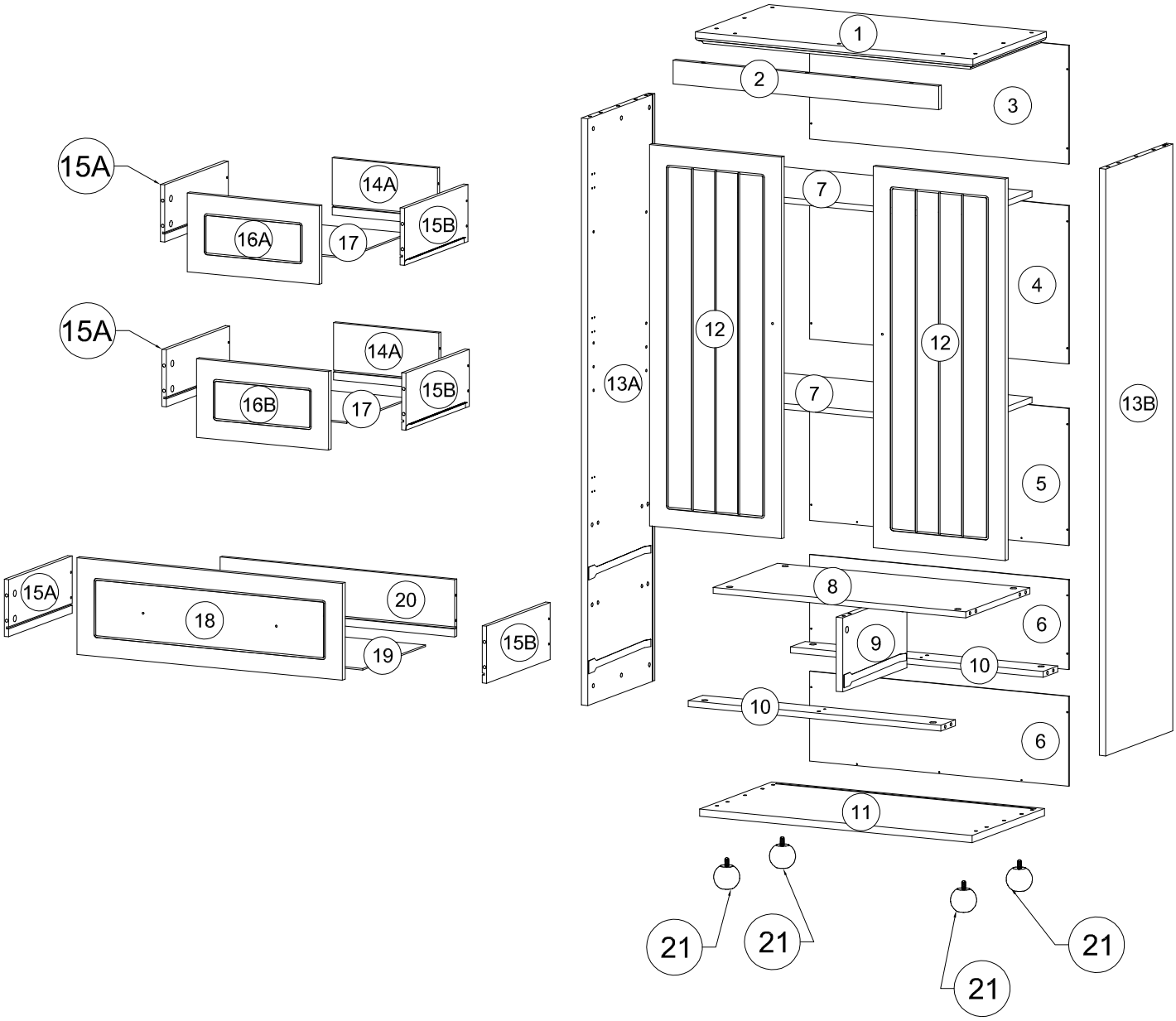

Part List

1 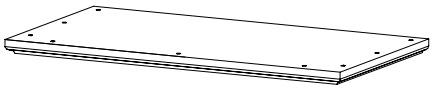 The top of the cabinet-1pc	2 Short bar - 1pc	3 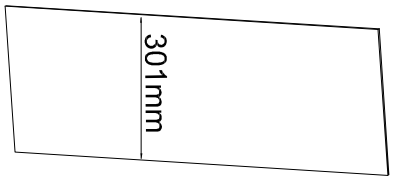 Cabinet Back-1pc
4 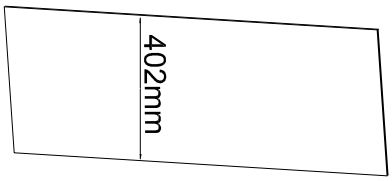 Cabinet Back-1pc	5 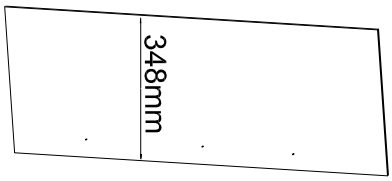 Cabinet Back-1pc	6 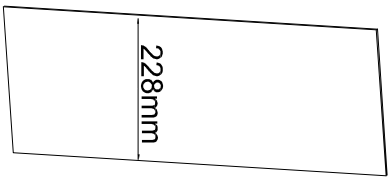 Cabinet Back-2pcs
7 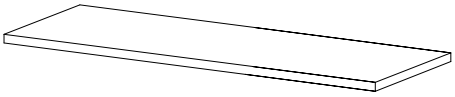 MOVING SHELVES-2pcs	8 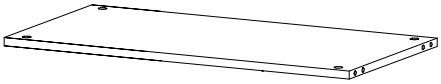 FIXED SHELF-1pc	9 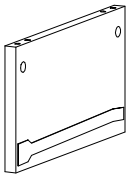 vertical bar-1pc
10 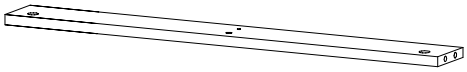 Short bar - 2pcs	11 CABINET BOTTOM-1pc	12 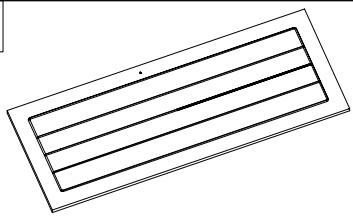 CABINET WINGS-2pcs
13A 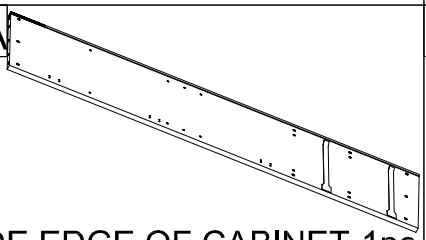 SIDE EDGE OF CABINET-1pc	13B 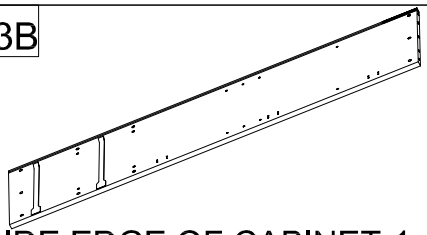 SIDE EDGE OF CABINET-1pc	14A 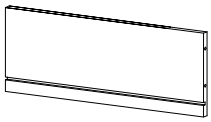 DRAWER-Back Panels-2pcs
15A 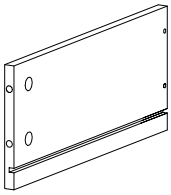 DRAWER-SIDE Panels-3pcs	15B 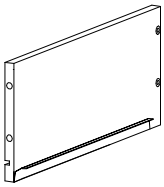 DRAWER-SIDE Panes-3pcs	16A 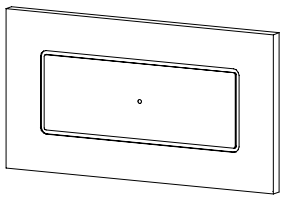 DRAWER-FRONT Panels-1pcs
16B 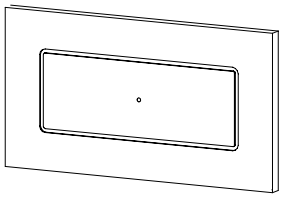 DRAWER-FRONT Panels-1pcs	17 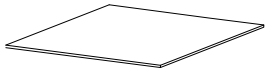 Panel- 2pcs	18 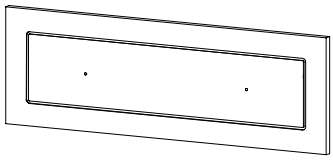 DRAWER-FRONT Panels-1pc

Part List

19	20	21
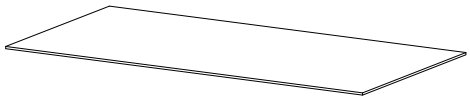	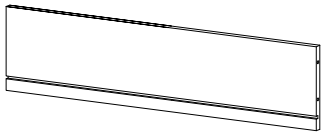	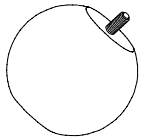
Panel- 1pc	DRAWER-Back Panels-1pc	Legs-4pcs

Hardware List

A Link 1 - 22 pcs	B 12MM Link 2- 12mm - 2pcs	C 1/4" x 10mm Horizontal -Hole bolts 15pcs
D 1/4" x 60mm Hex-Head bolts 6pcs	E Ø8 x 30 mm Wood dowel 22pcs	F #4 x 15 mm Wood Screws 36pcs
G 1/4" x 70mm Hex-Head bolts 9pcs	H Hinge - 6pcs	R Handle 6pcs
J Support Pin 8pcs	K Ø1/4 x 30 mm wood screws 2pcs	L M4 x 20mm Hex-Head bolts 6pcs
M #4 x 30 mm Wood Screws 16pcs	N 10MM Link 2 -10mm - 20 pcs	O M4 x 20 mm Wood Screws 27pcs
P 1 2 3 4 5 Wall brackets 1set	Q Allen Key 1pcs	

Assembly Tools Required (Not Included)

STEP 1: Following below illustration:

E	K	A	B
4pcs	2pcs	2pcs	2pcs

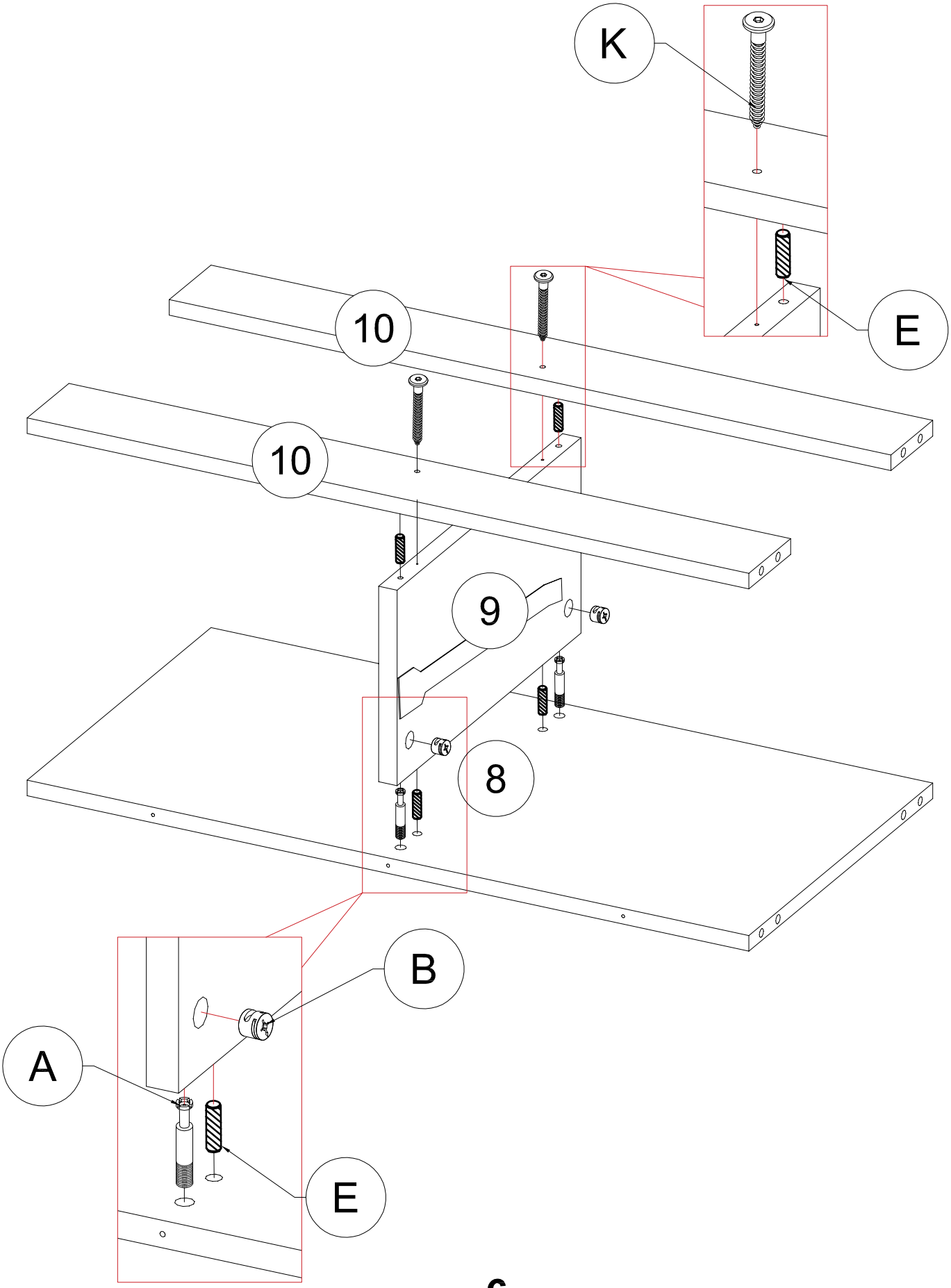

STEP 2: Following below illustration:

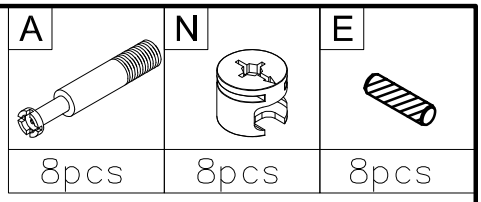

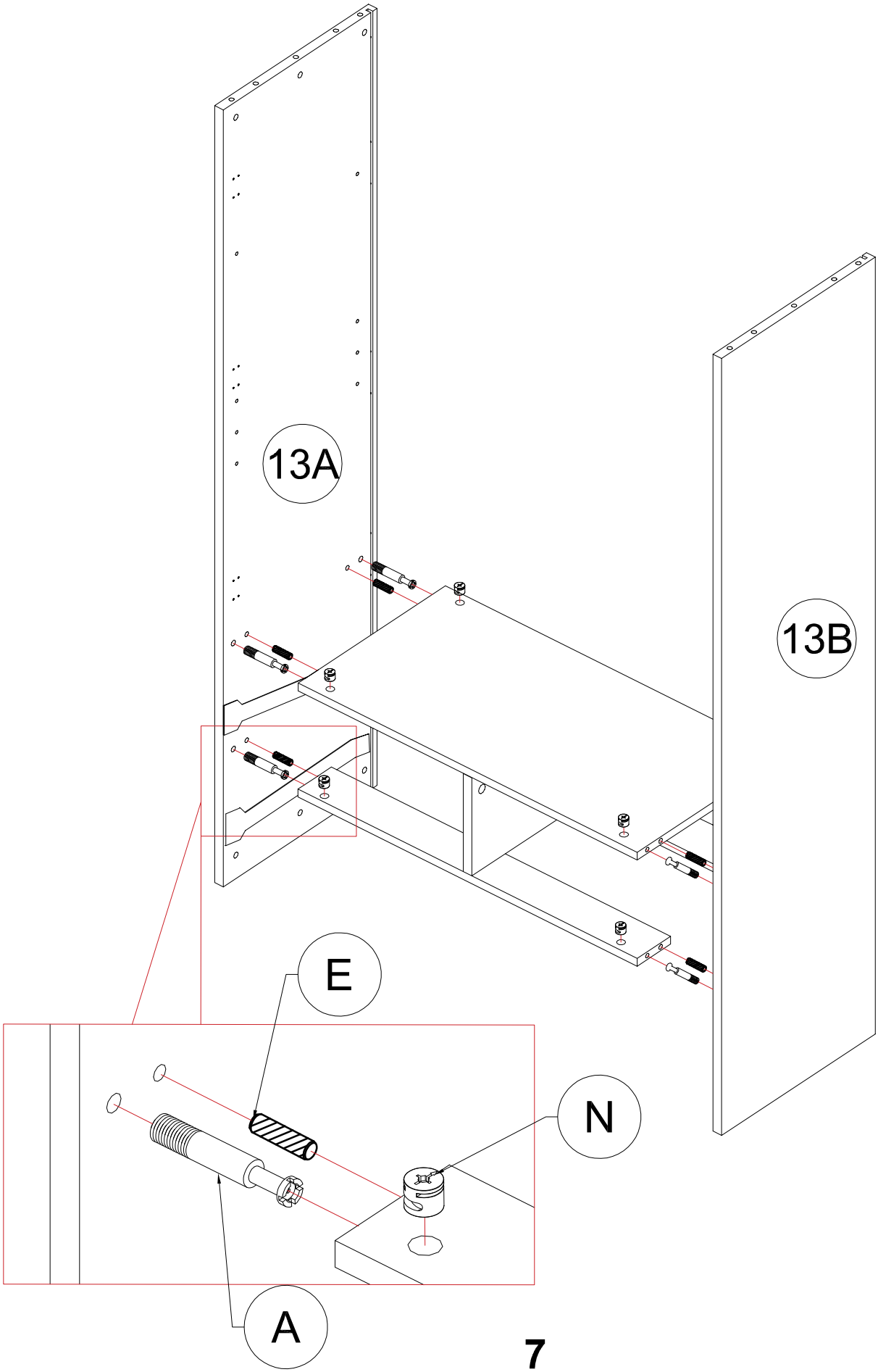

STEP 3: Following below illustration:

D	C	E
6pcs	6pcs	4pcs

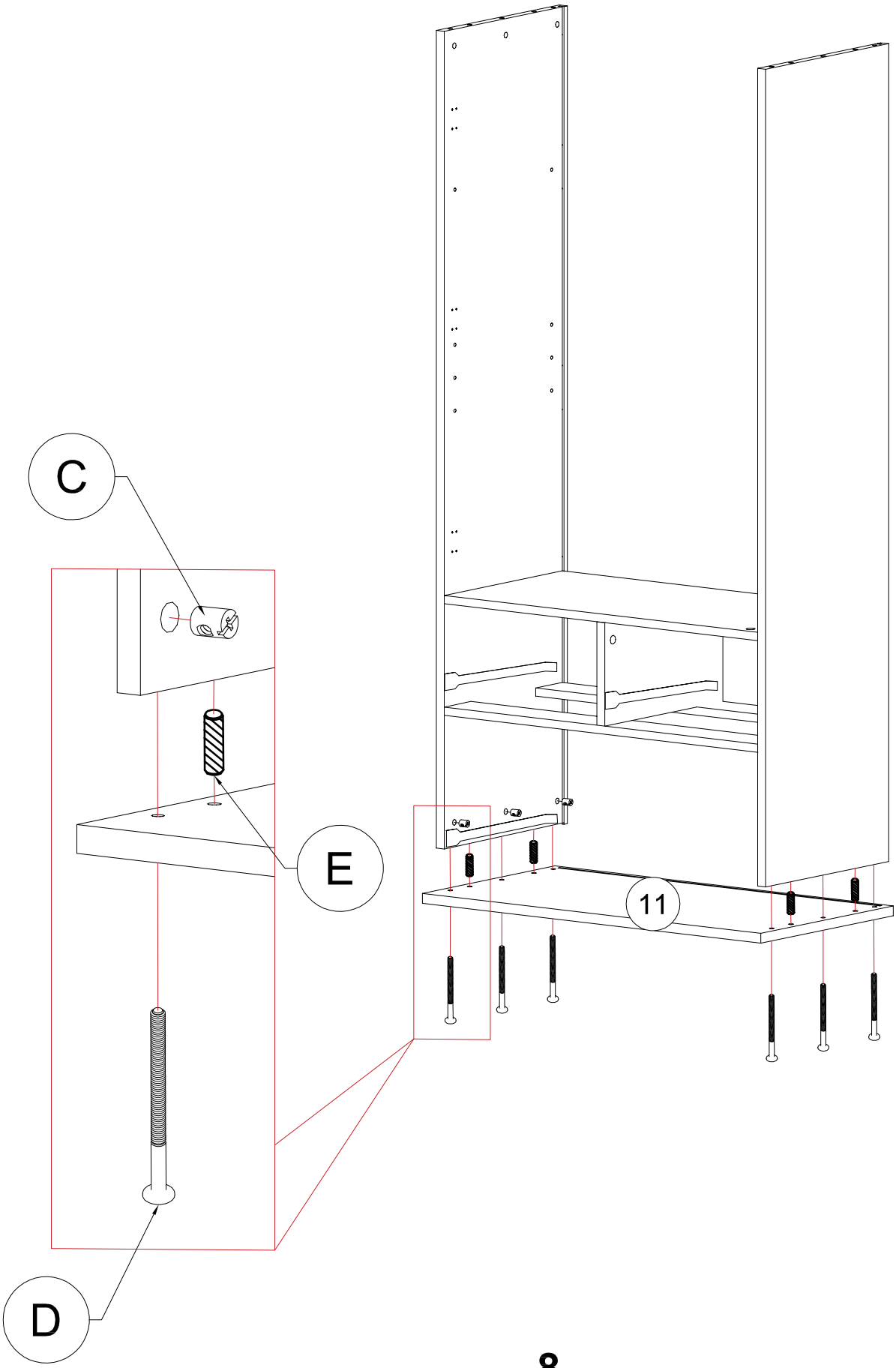

STEP 4: Following below illustration:

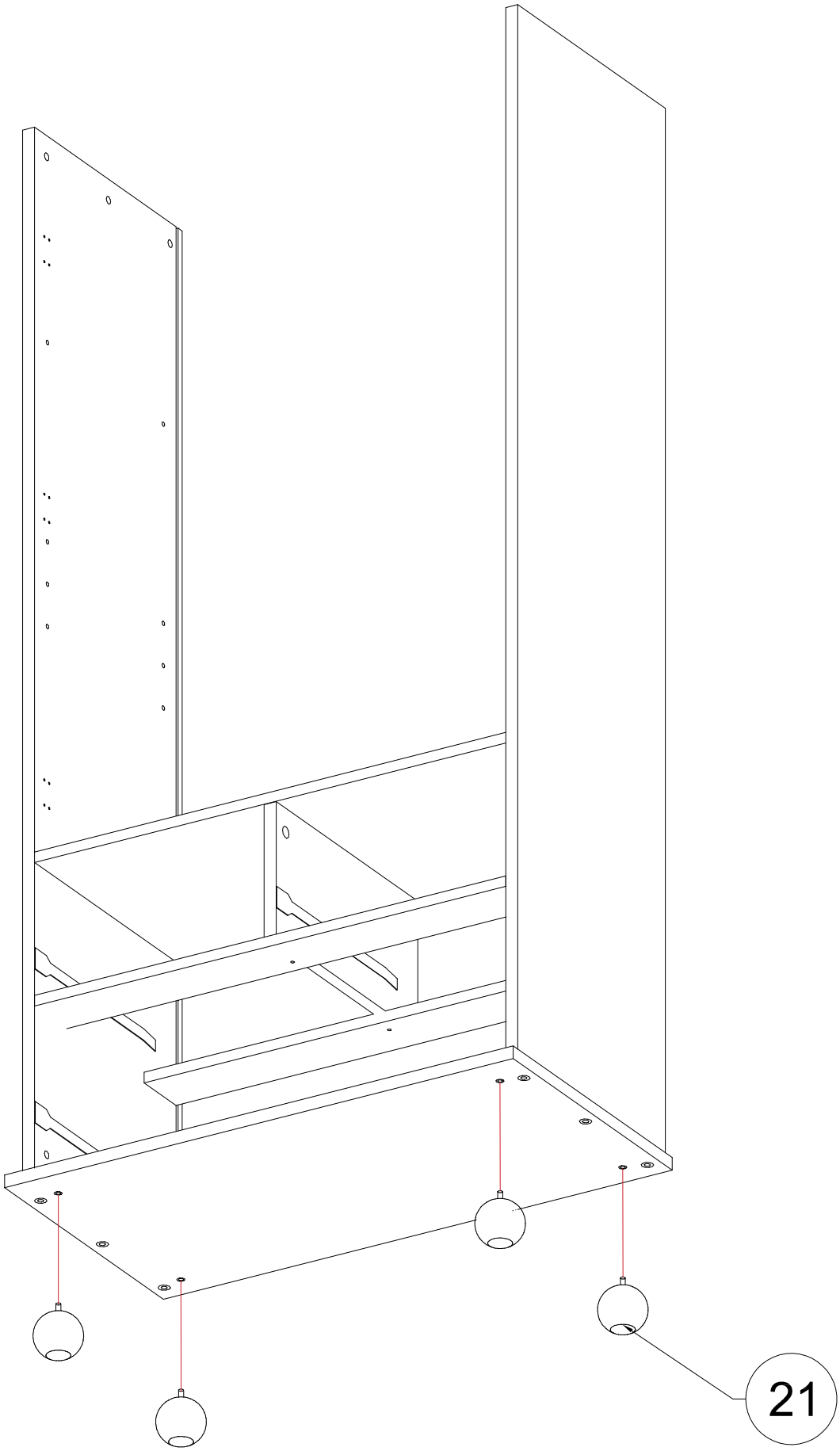

STEP 5: Following below illustration:

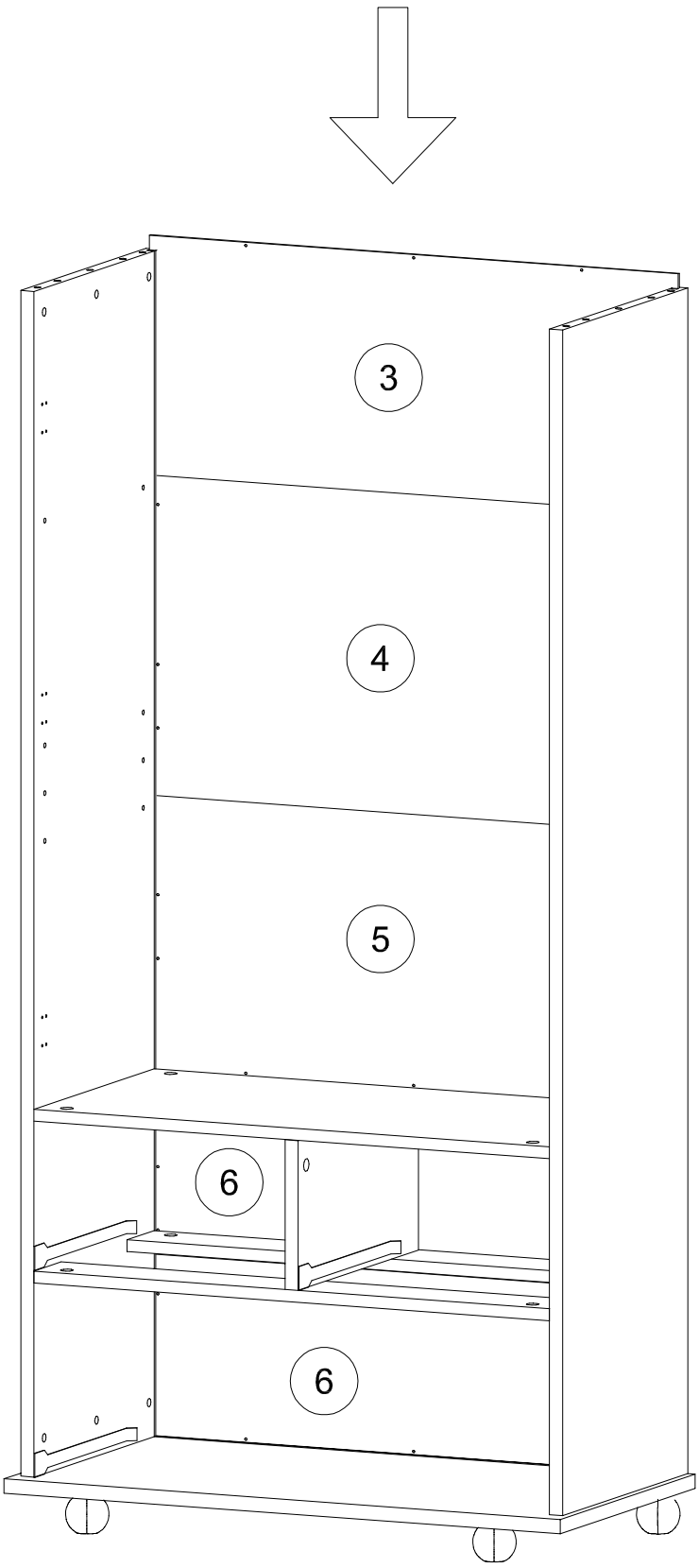

STEP 6: Following below illustration:

G	C	E
6pcs	6pcs	4pcs

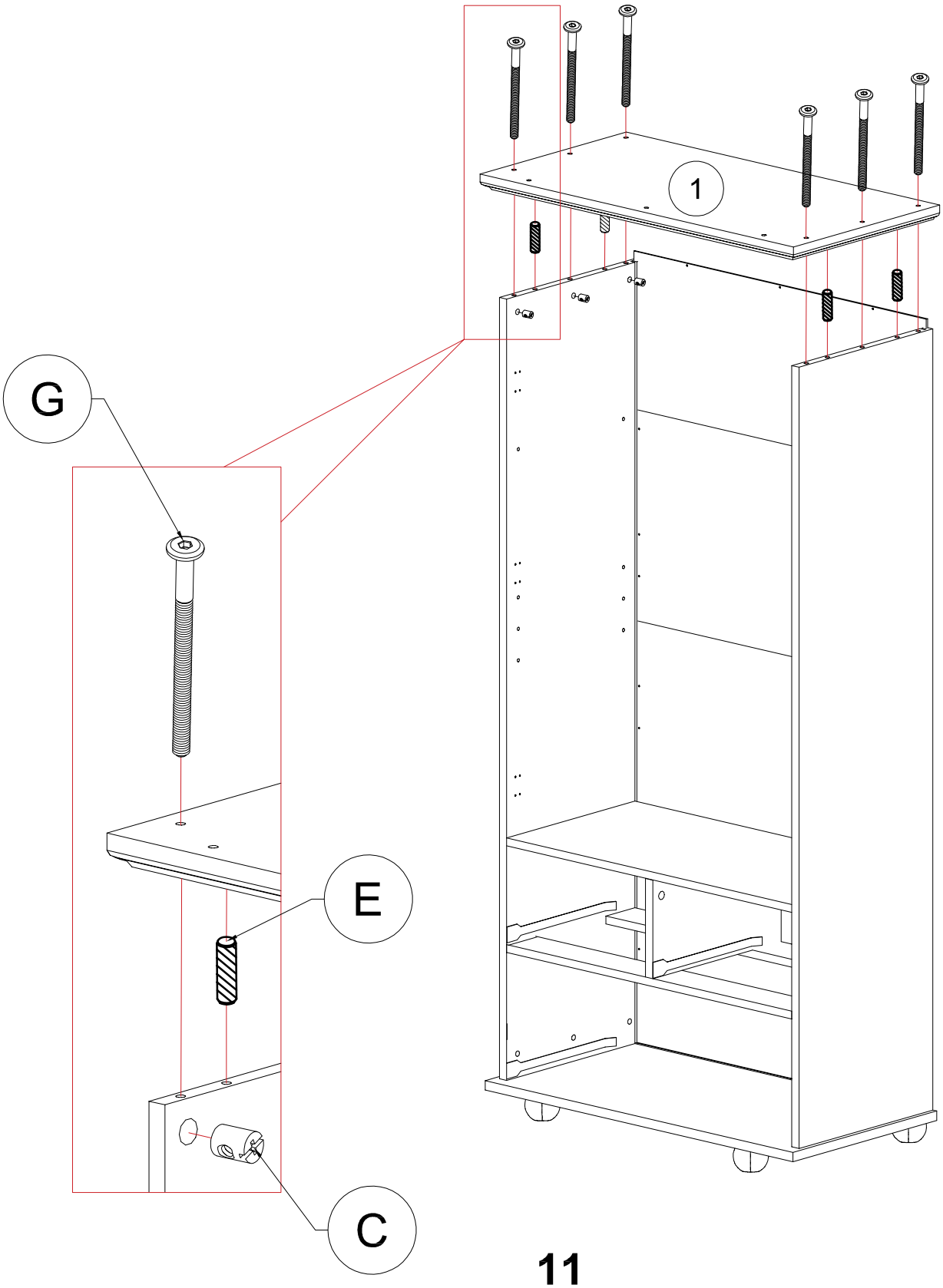

STEP 7: Following below illustration:

G	C	E
3pcs	3pcs	2pcs

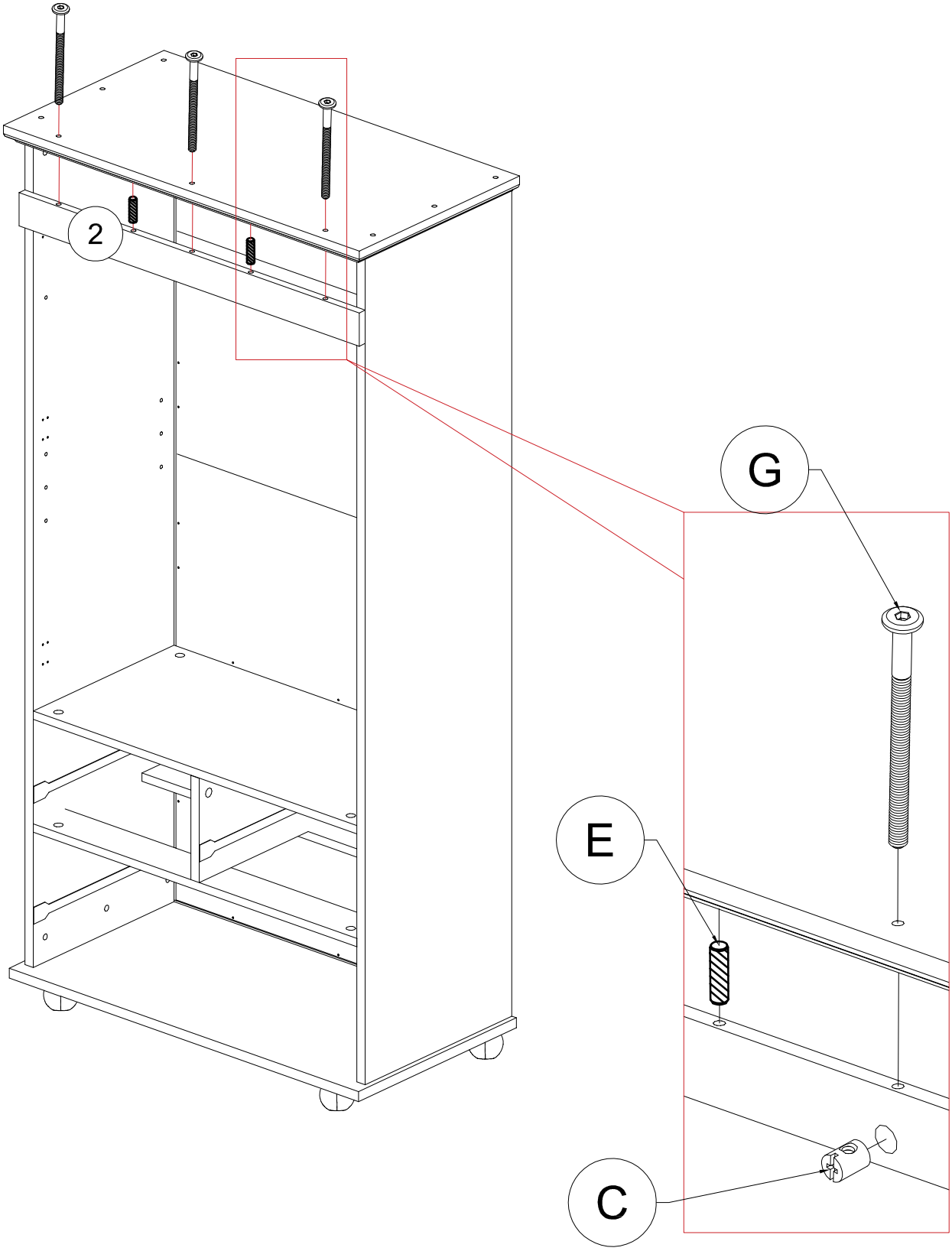

STEP 8: Following below illustration:

H	F
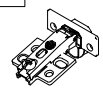	
6pcs	12pcs

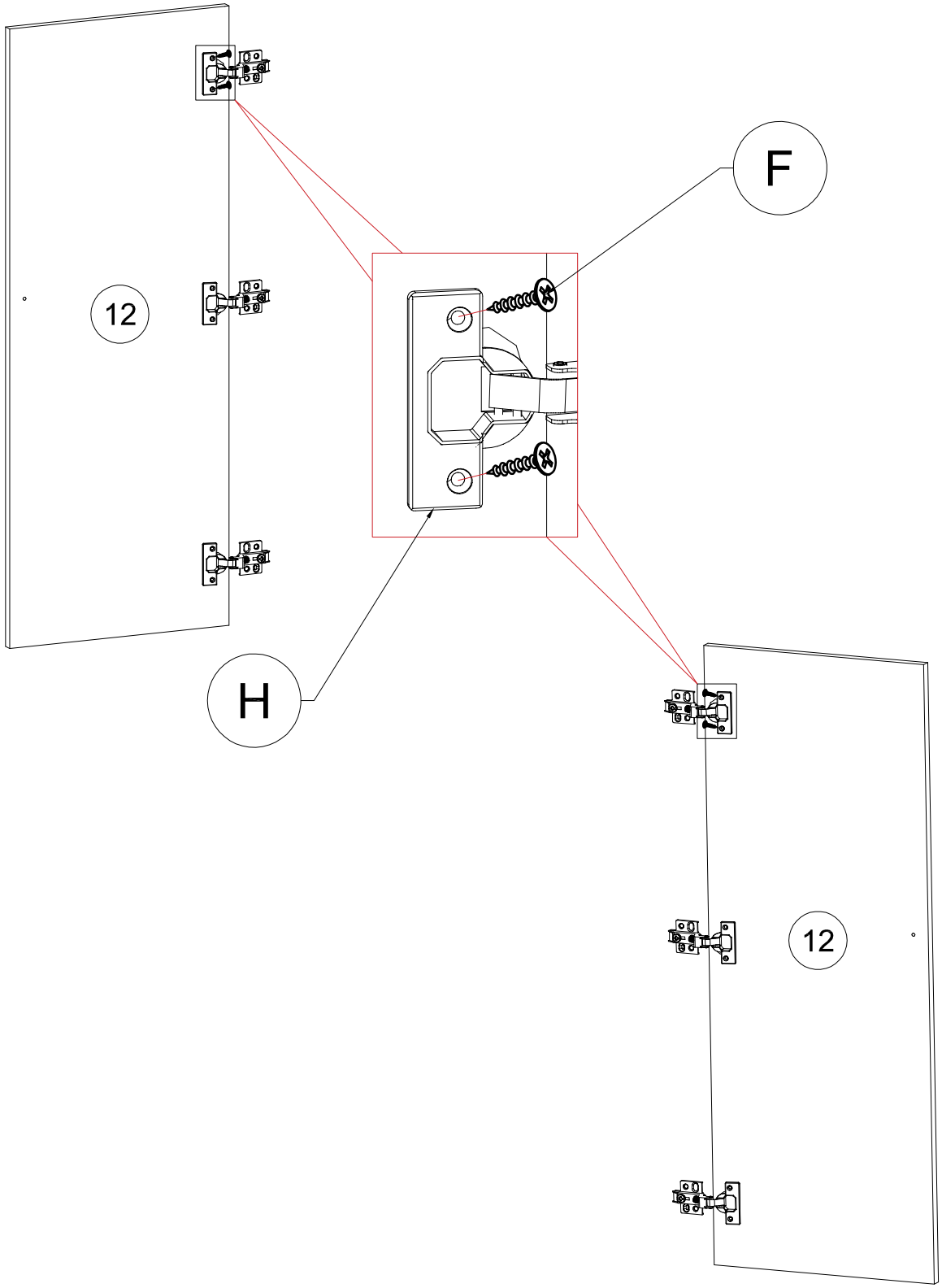

STEP 9: Following below illustration:

R	L	F
2pcs	2pcs	24pcs

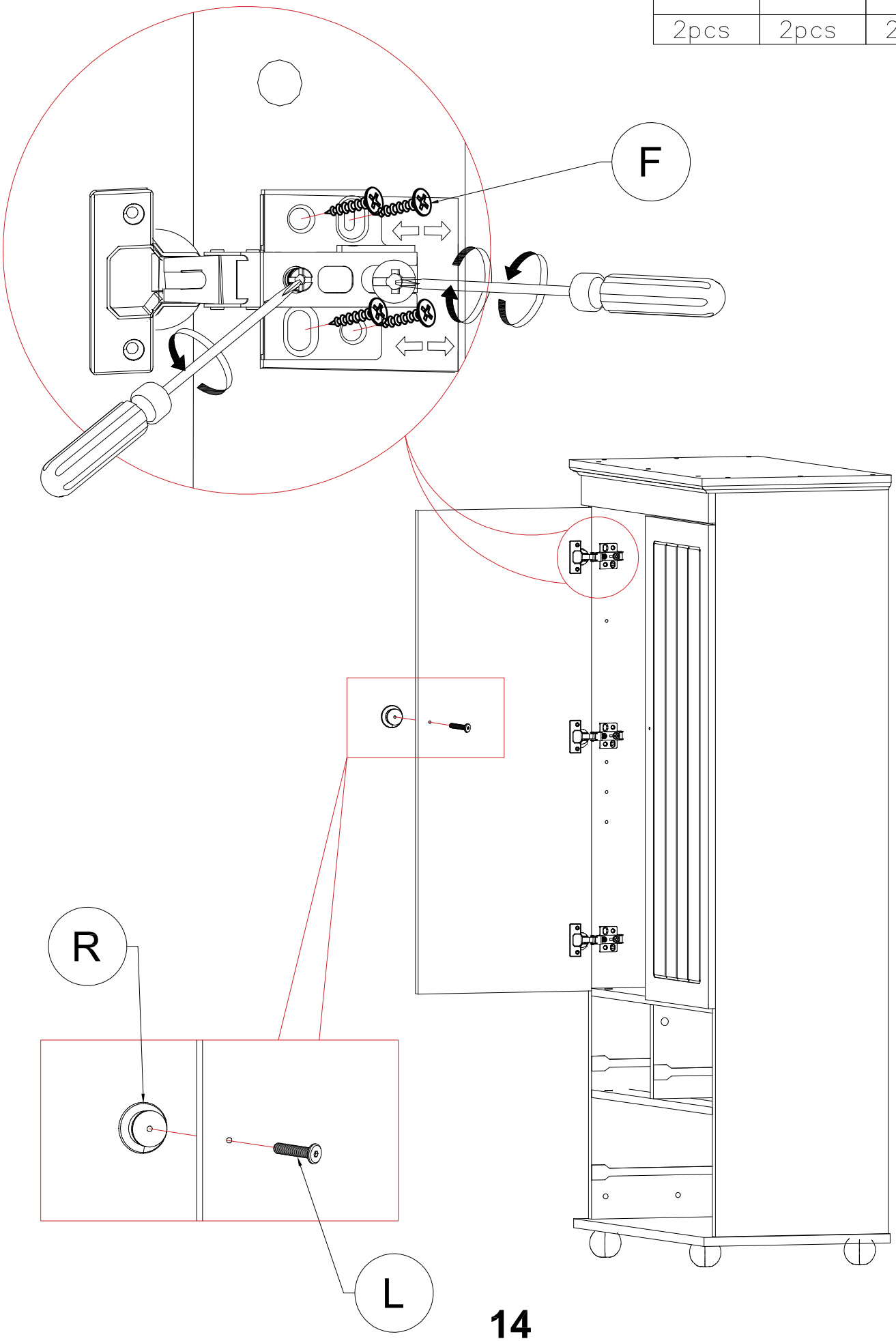

STEP 10.1: Following below illustration:

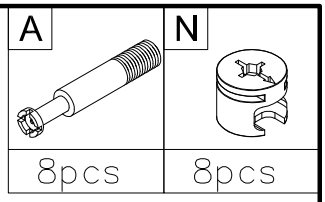

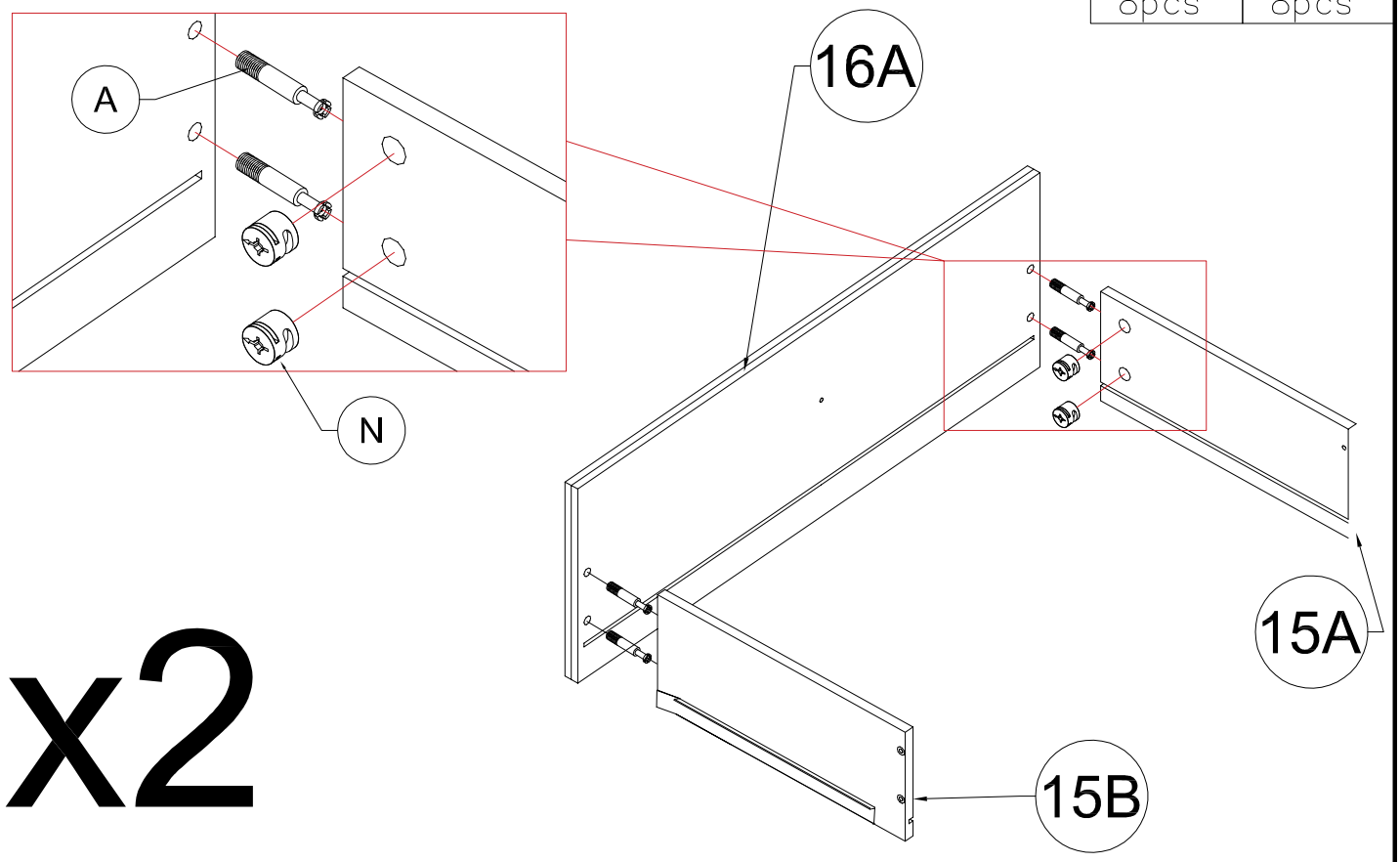

STEP 10.2: Following below illustration:

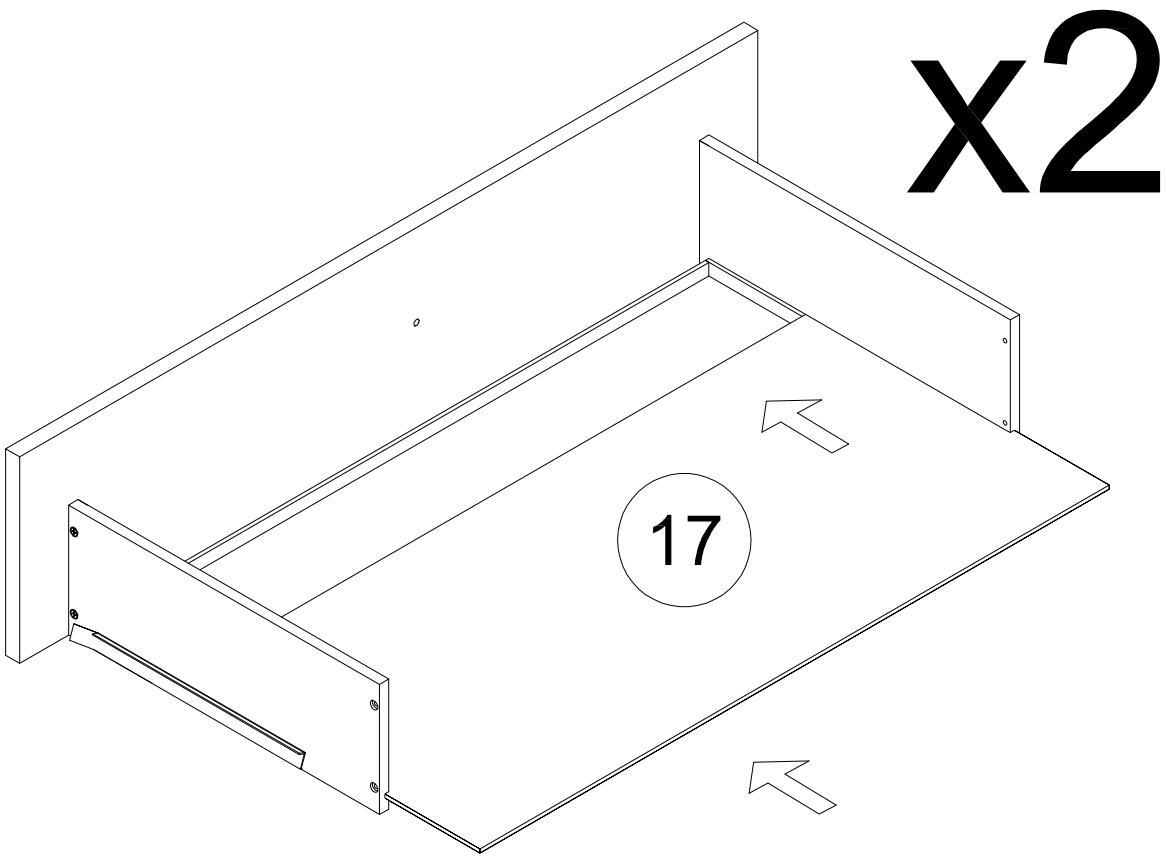

STEP 11.1: Following below illustration:

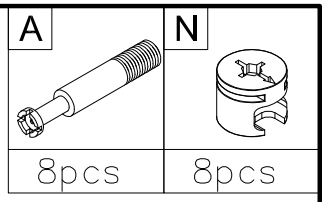

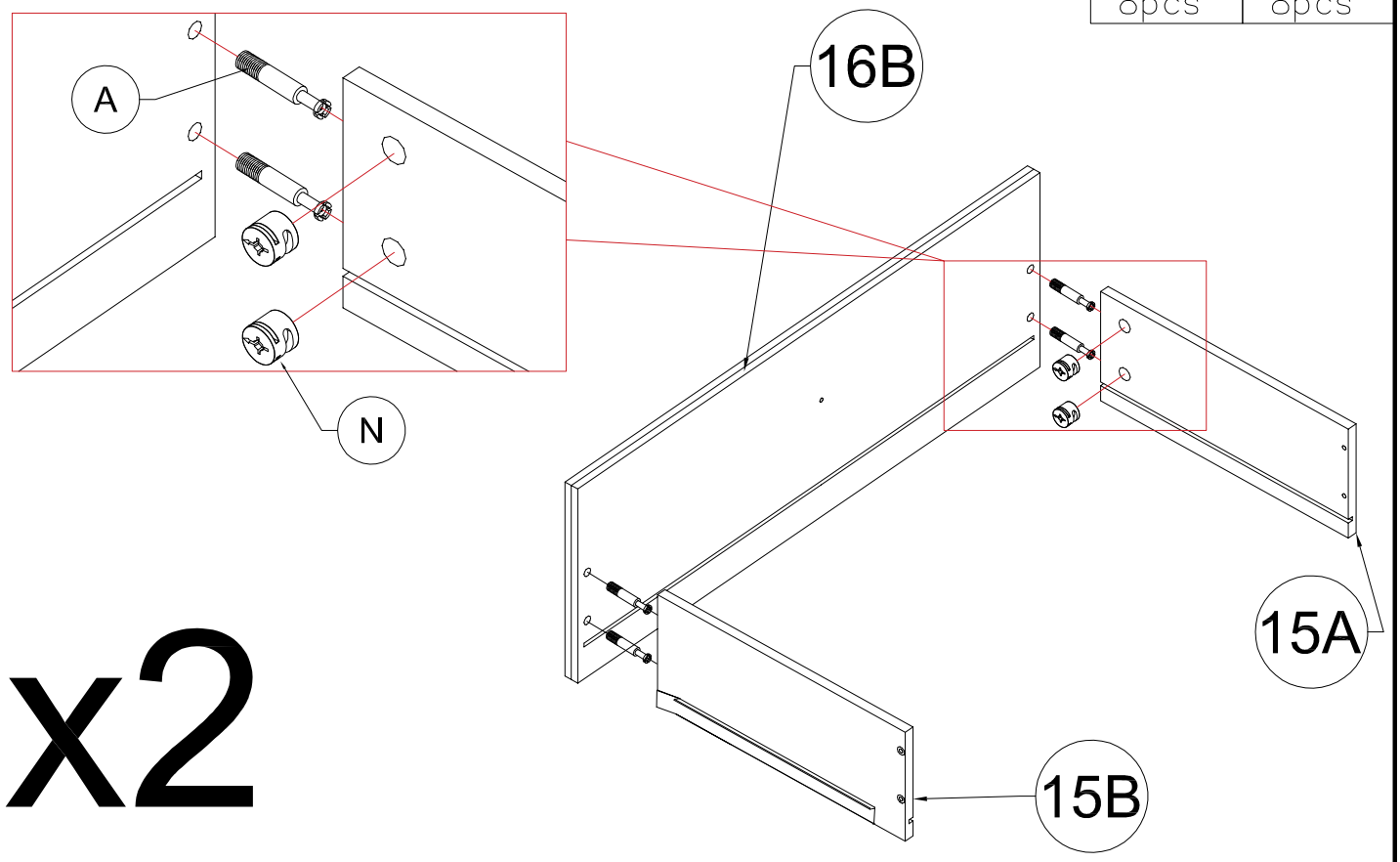

STEP 11.2: Following below illustration:

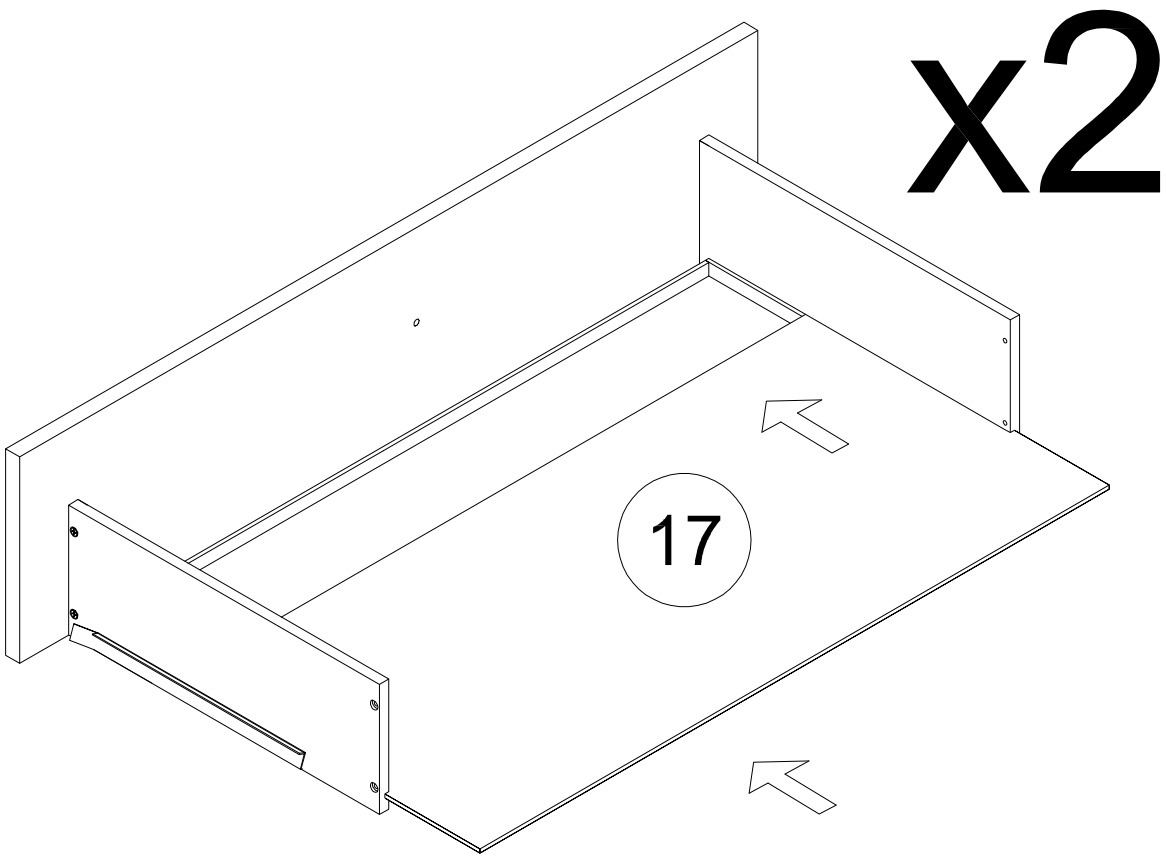

STEP 12: Following below illustration:

R	L	M
2pcs	2pcs	8pcs

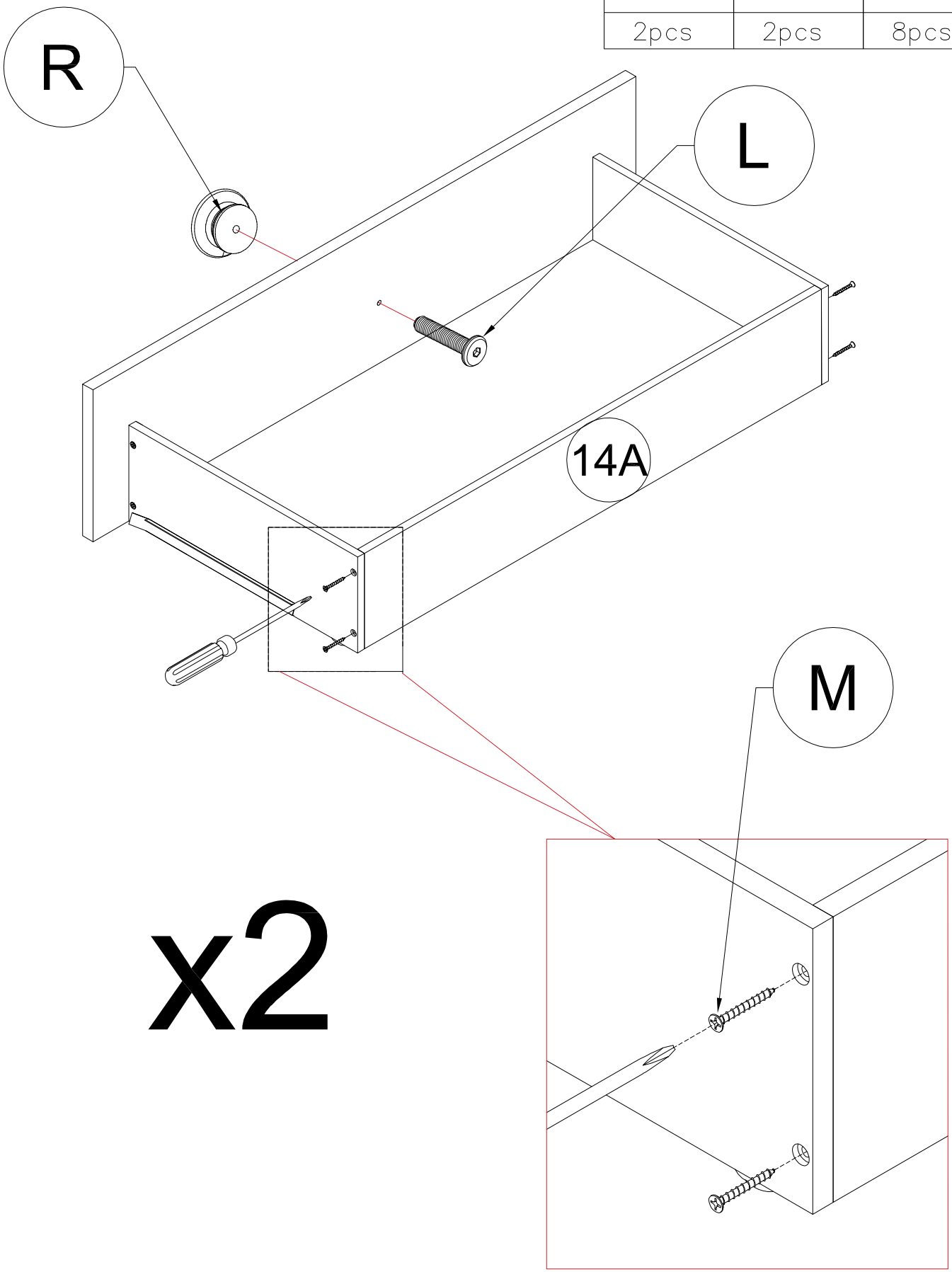

STEP 13.1: Following below illustration:

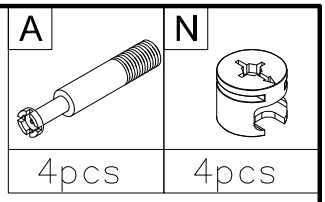

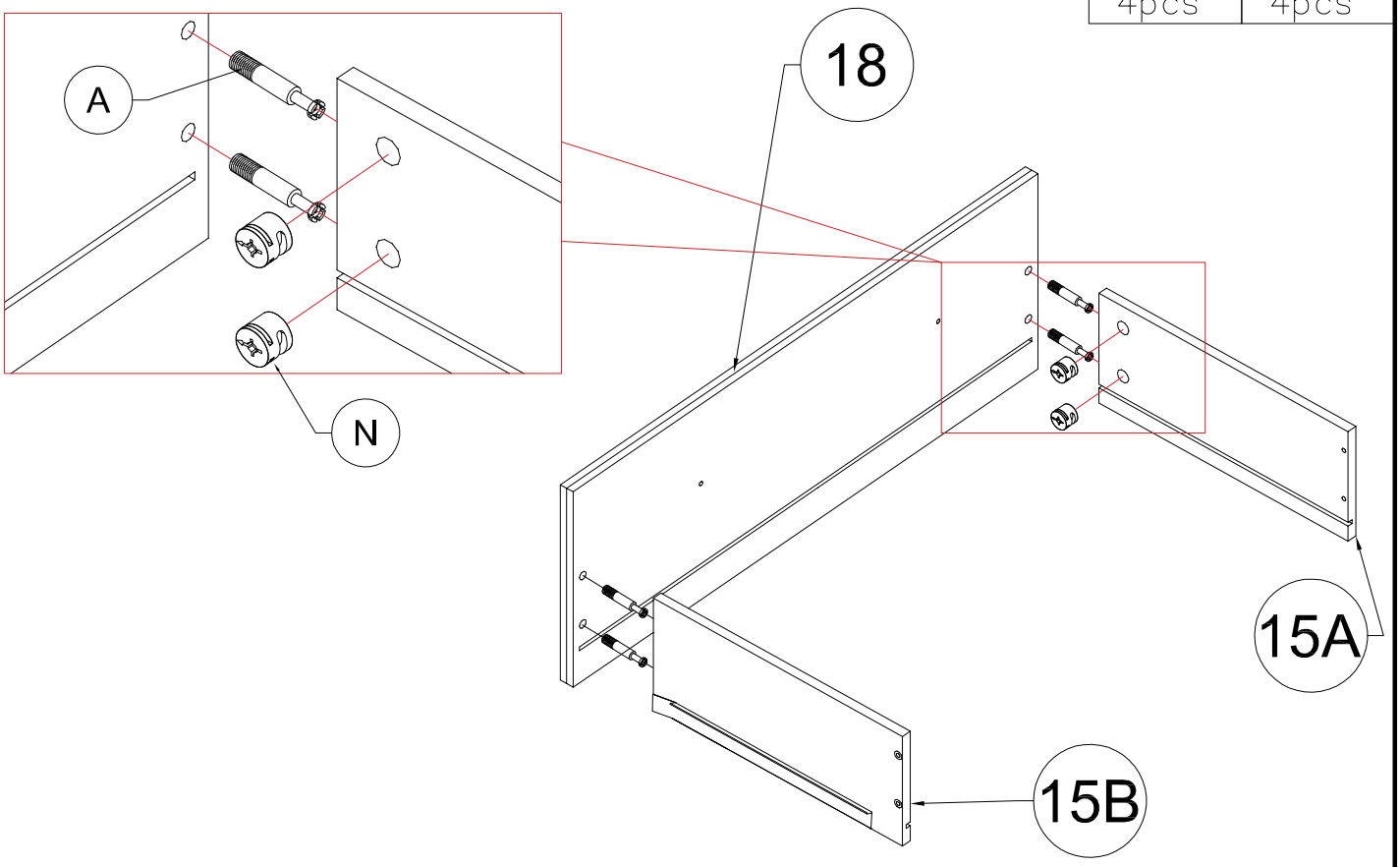

STEP 13.2: Following below illustration:

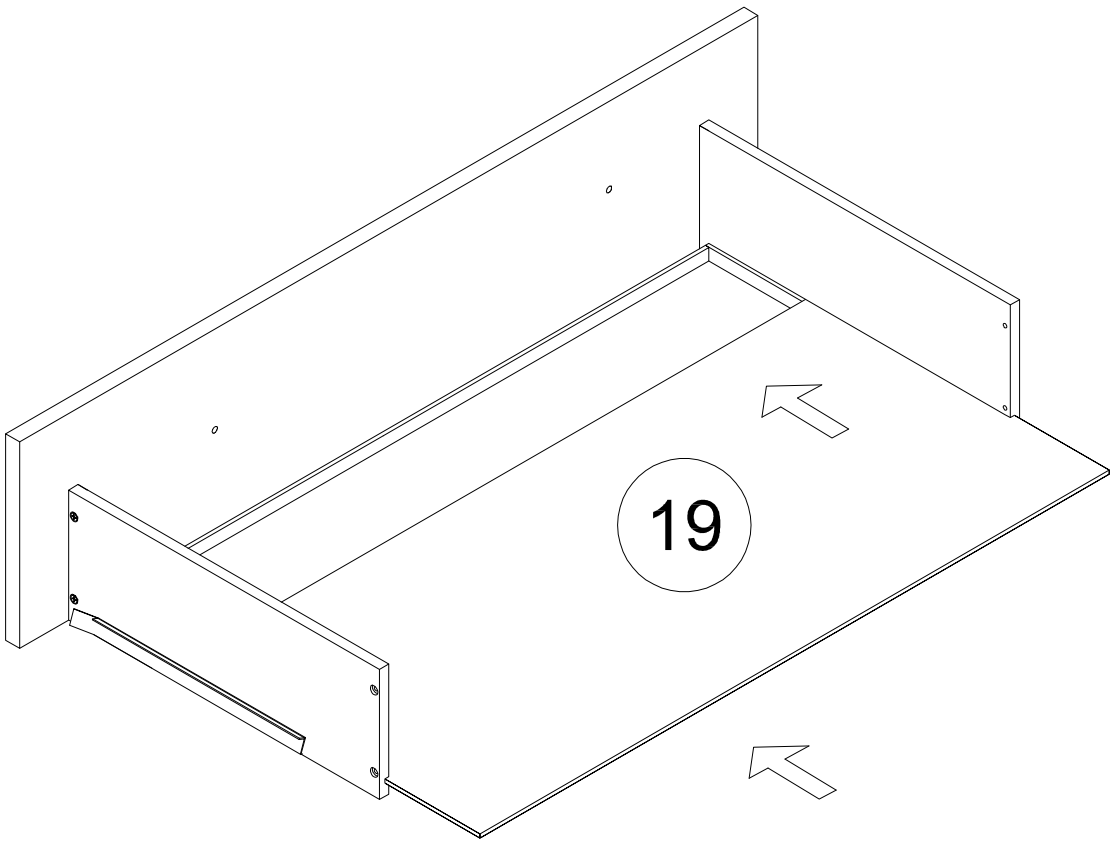

STEP 14: Following below illustration:

R	L	M
2pcs	2pcs	4pcs

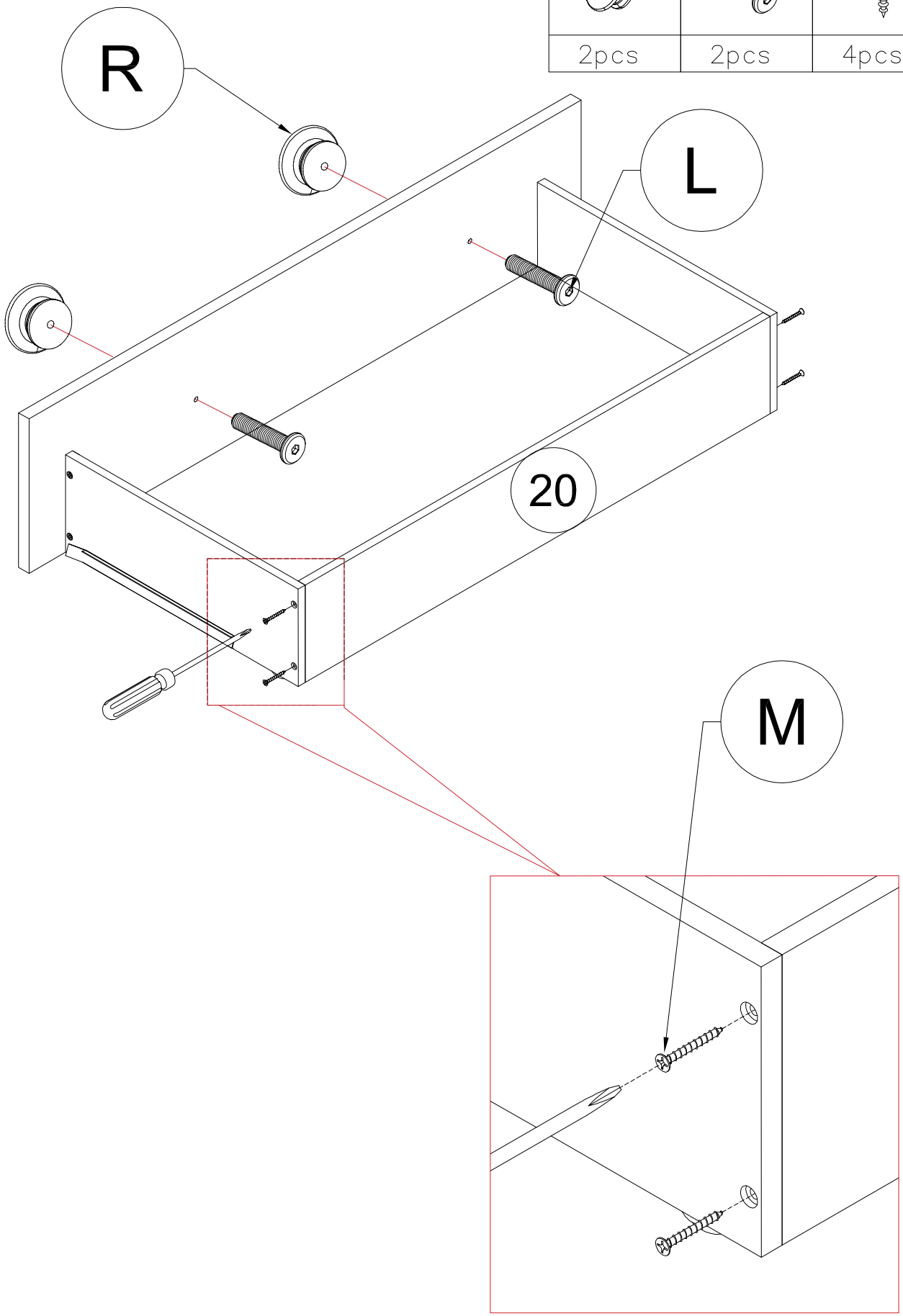

STEP 15: Following below illustration:

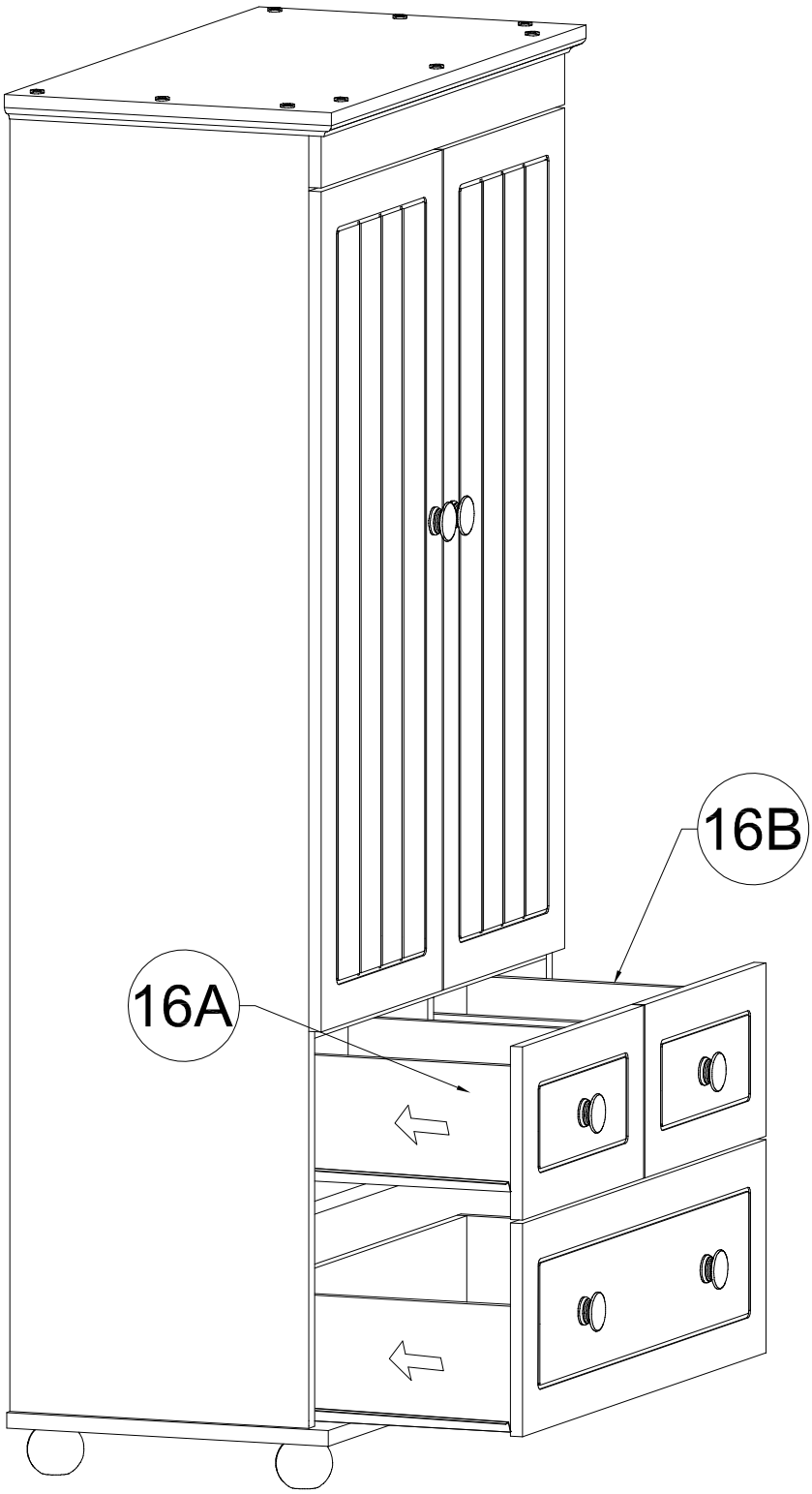

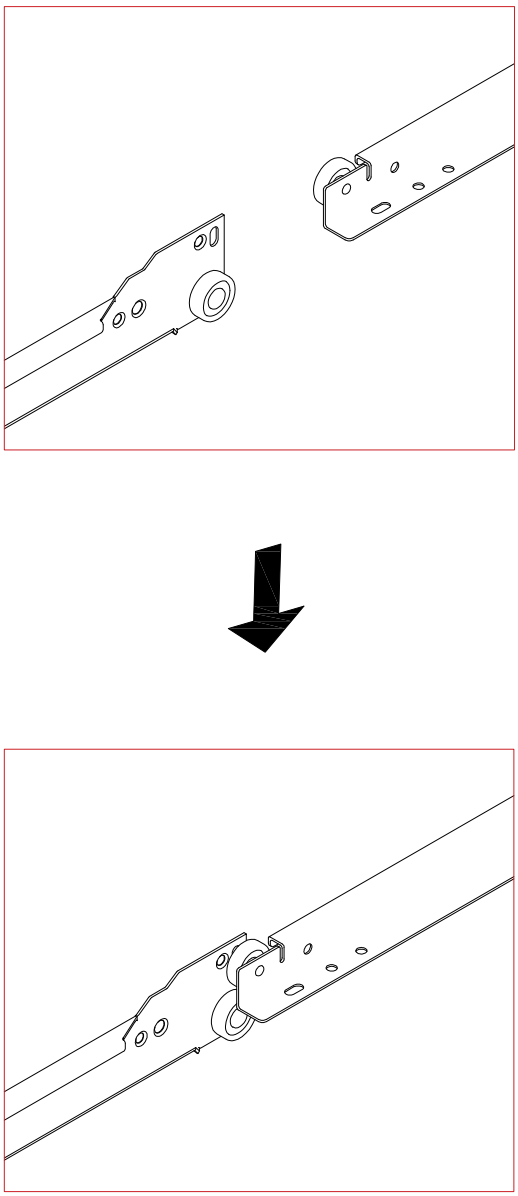

STEP 16: Following below illustration:

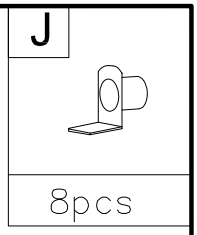

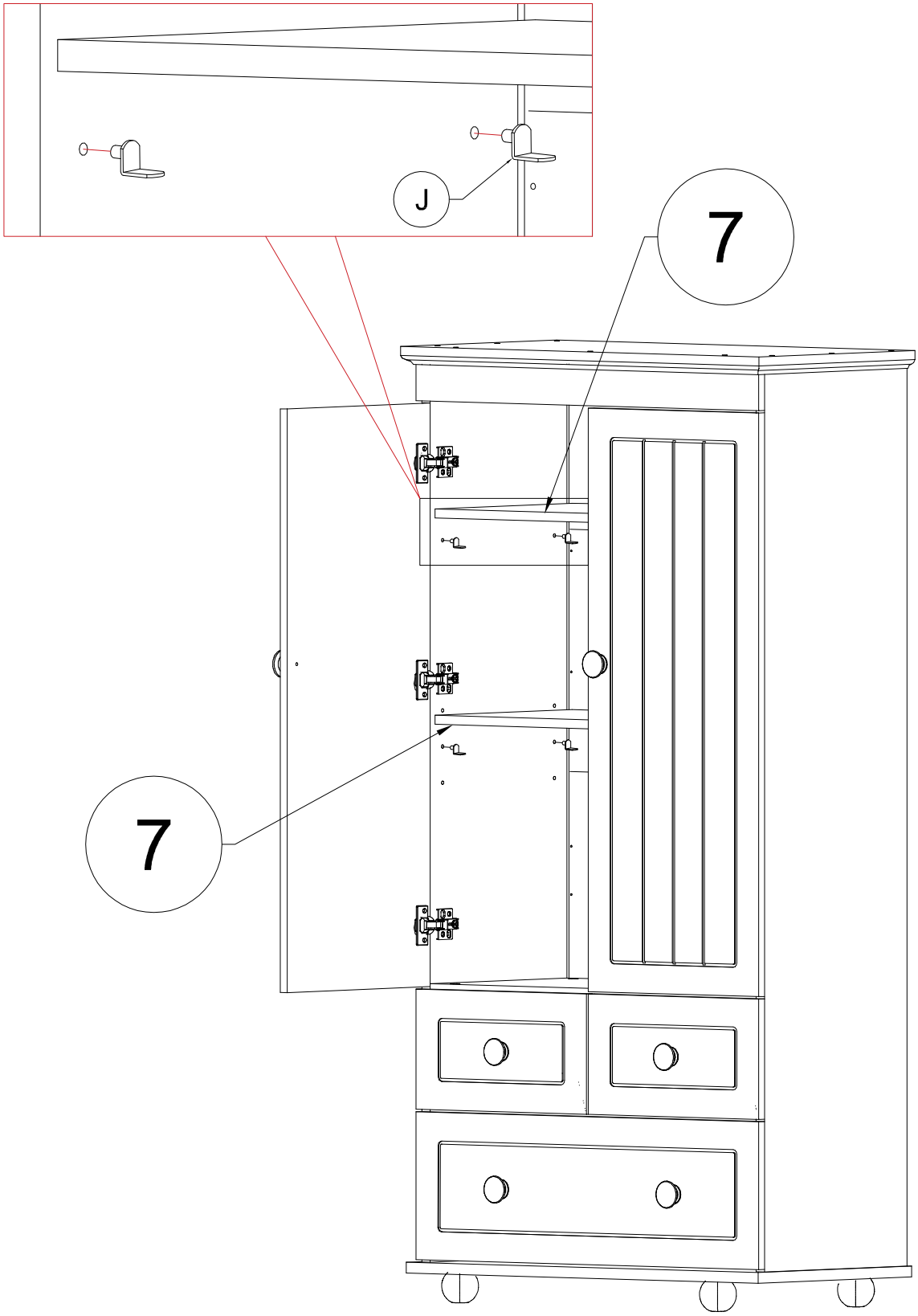

STEP 17: Following below illustration:

P-2	P-5	O
2pcs	2pcs	27pcs

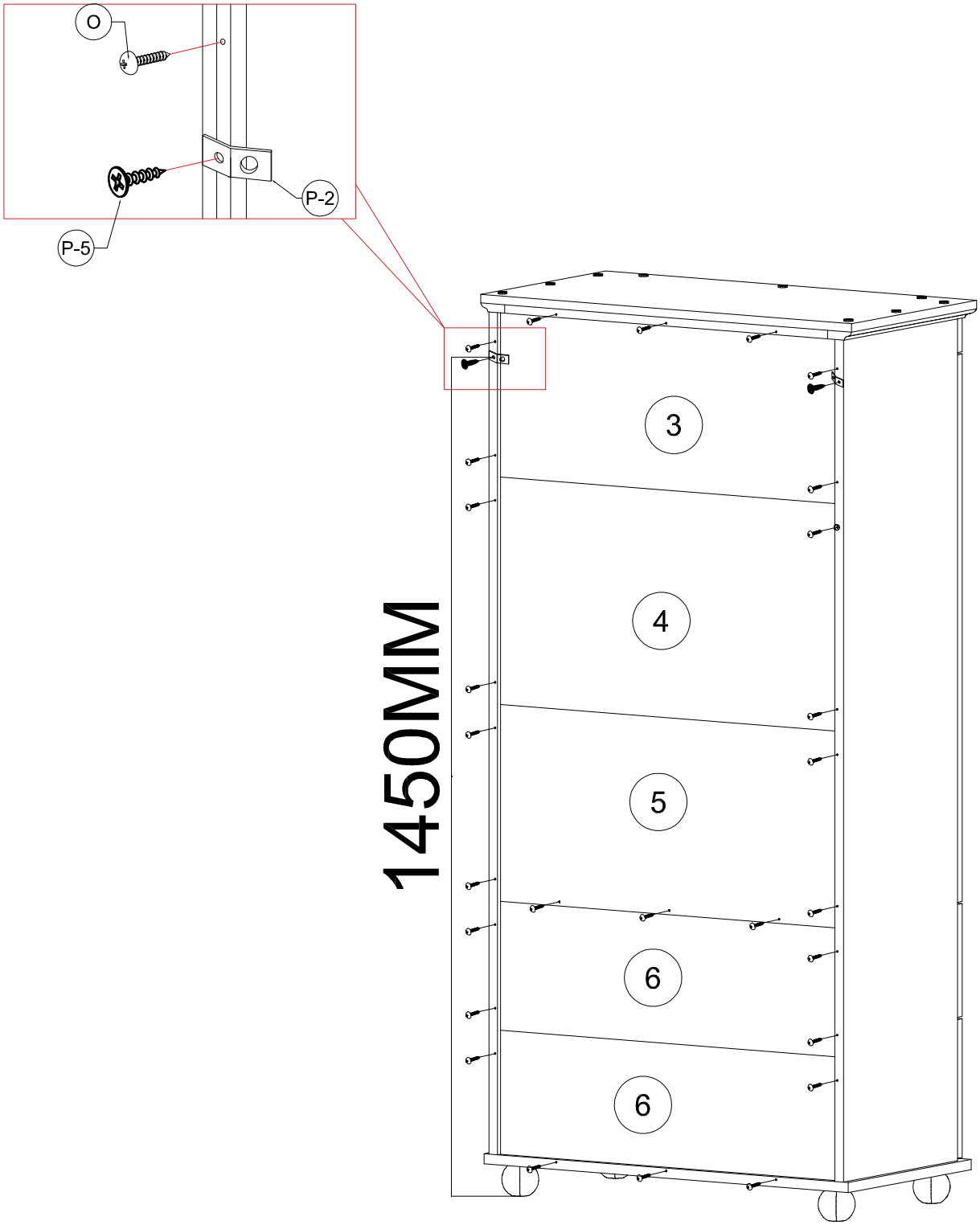

STEP 18: Following below illustration:

P-2	P-4	P-3
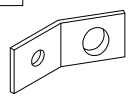	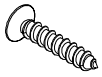	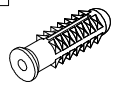
2pcs	2pcs	2pcs

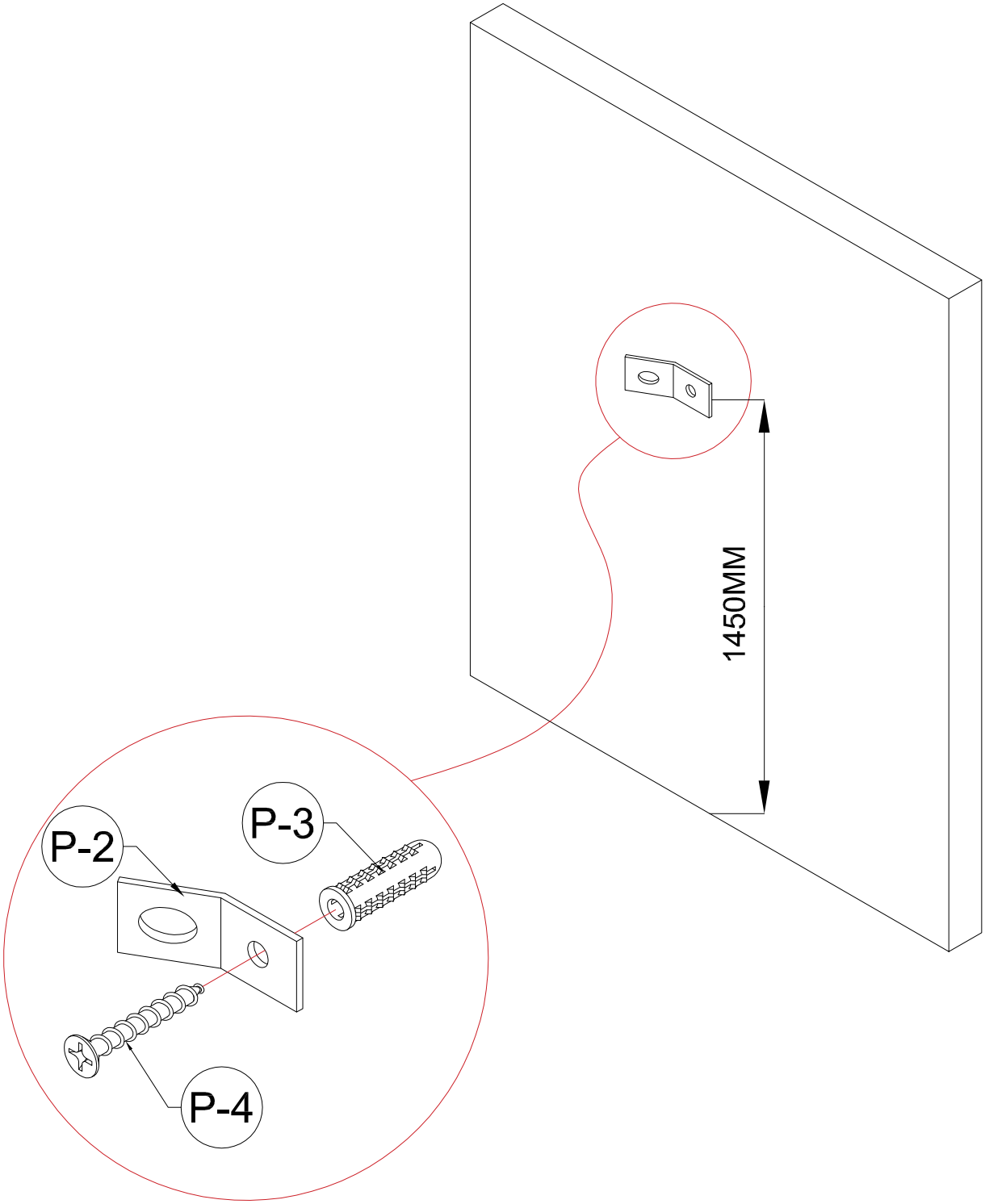

STEP 19: Following below illustration:

P-1
2pcs

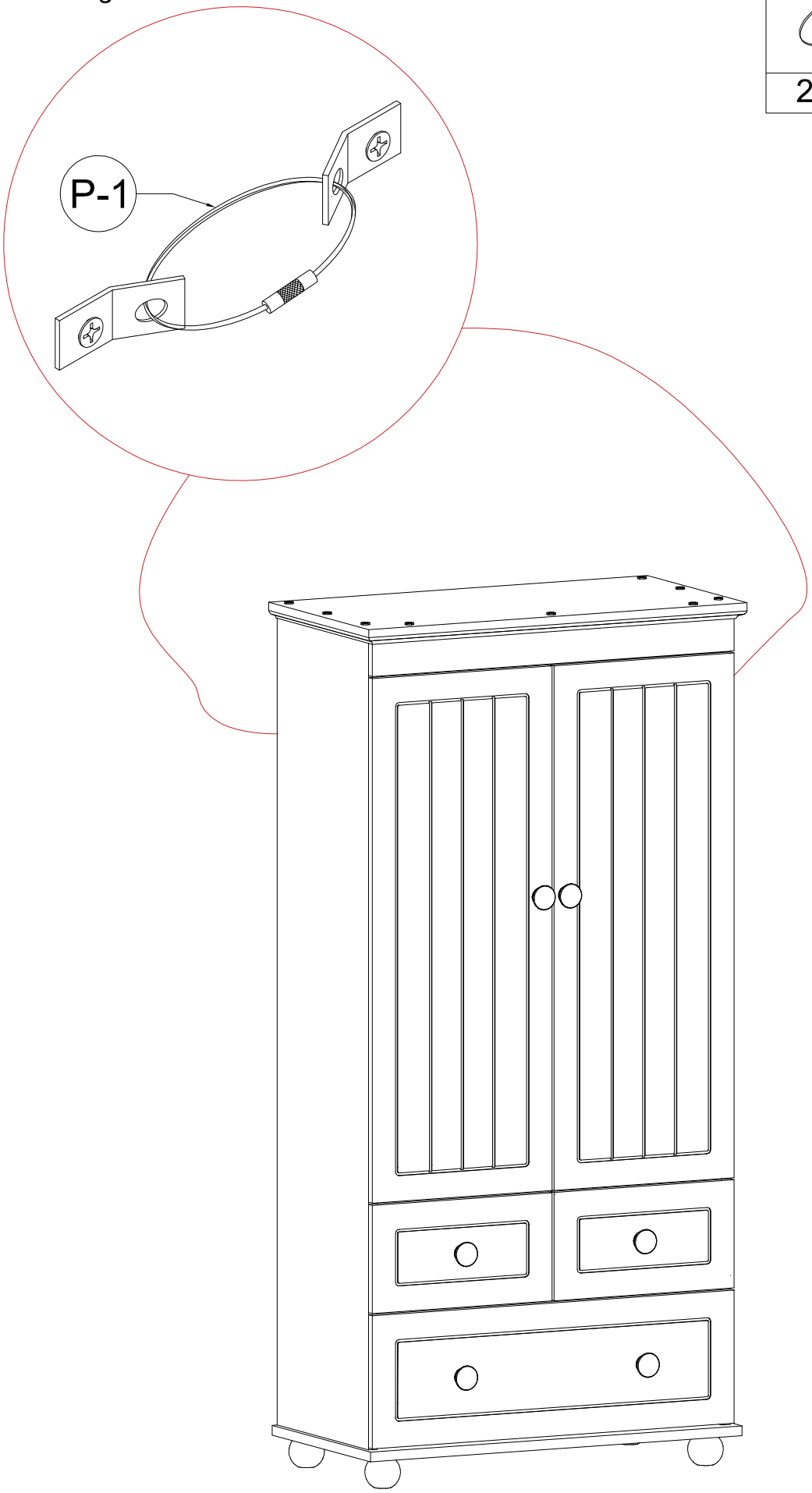
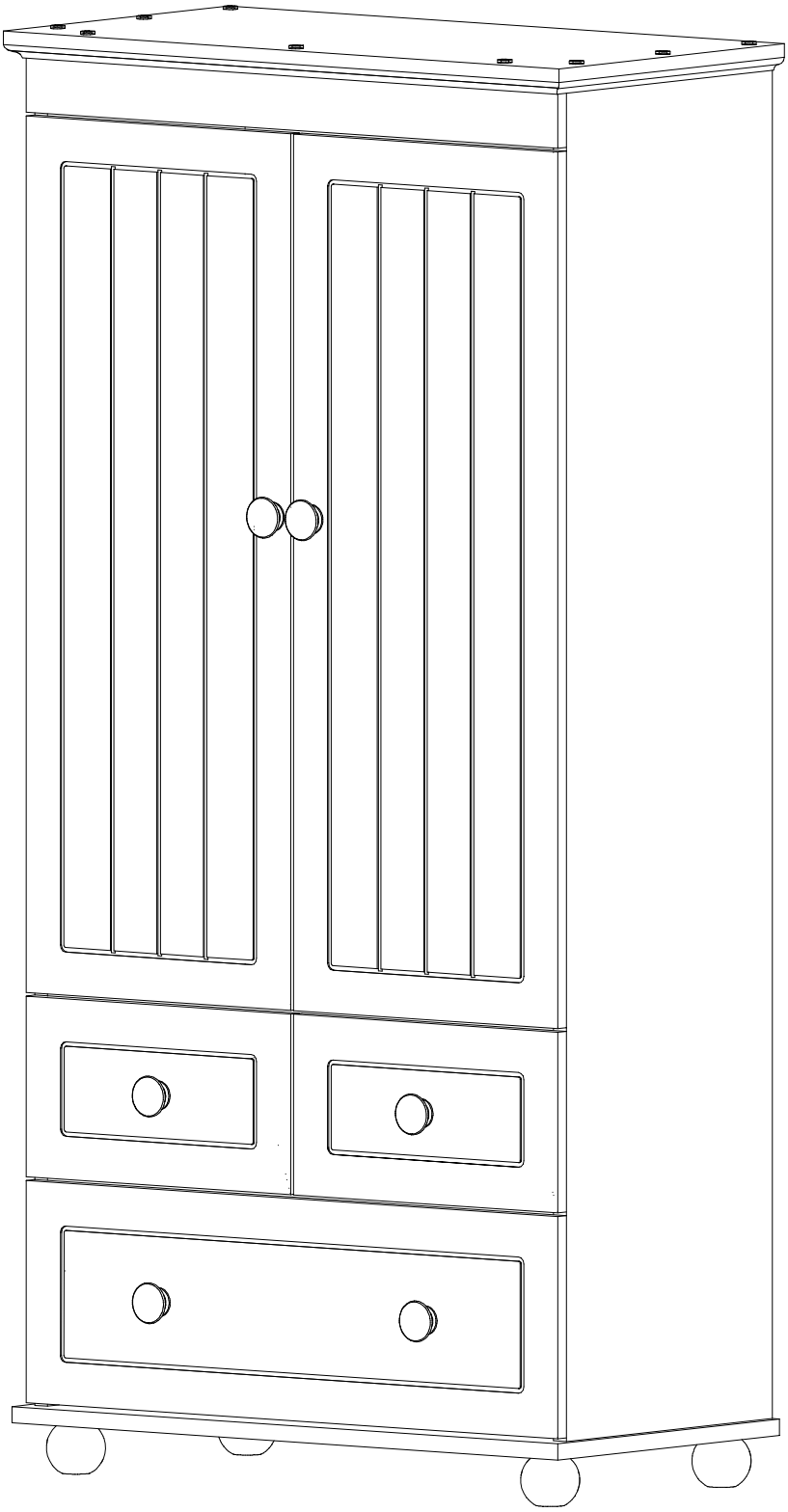
FINISH