67063 MIRROR JEWELLERY CABINET

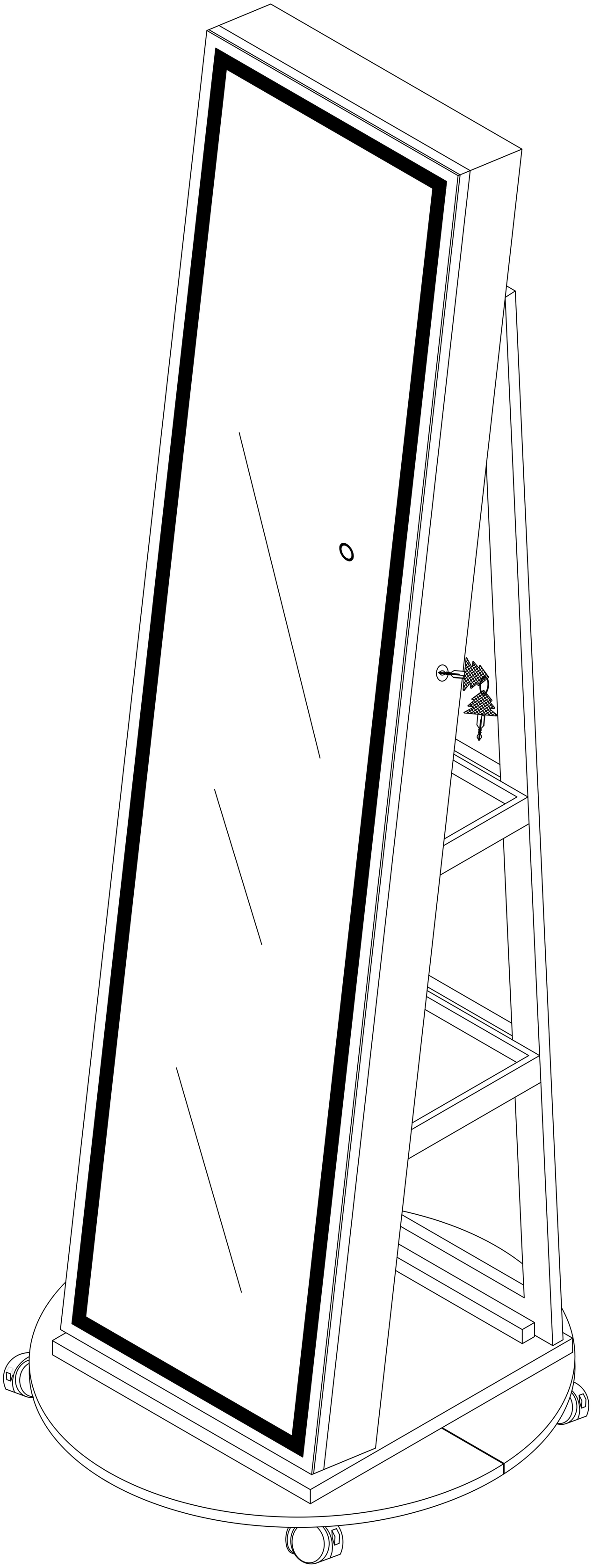

Hardware list

Accessories list

A	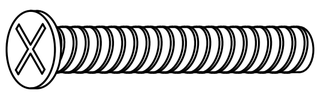	Long screw(6*30mm)	6 Pcs
		The key	1 Pcs
C	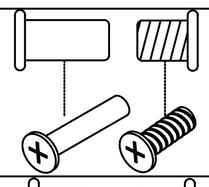	Long cross screw assembly（5*20mm）	4 Pcs
D	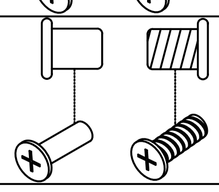	Short cross screw assembly（5*8mm）	4 Pcs
	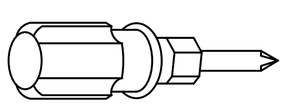	Bolt driver	1 Pcs
F	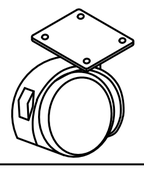	Wheel	4 Pcs
G	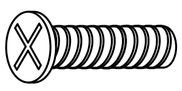	Cross nut（6x22mm）	4 Pcs
I	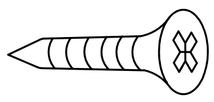	Screw（3.5*12mm）	16 Pcs
	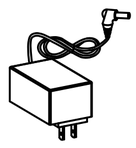	The power adapter(12V 3A)	1 Pcs

Anti tipping hardware

K

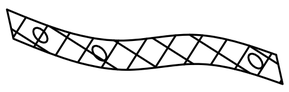
x1

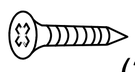
x1 (3x16mm)

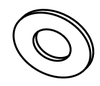
x1

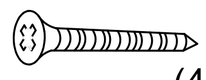
x1 (4x45mm)

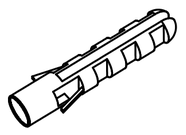
x1

Step 1

I	(3.5*12mm) x16	F	x 4
A	(6*30mm) x 2	G	(6*22mm) x 4

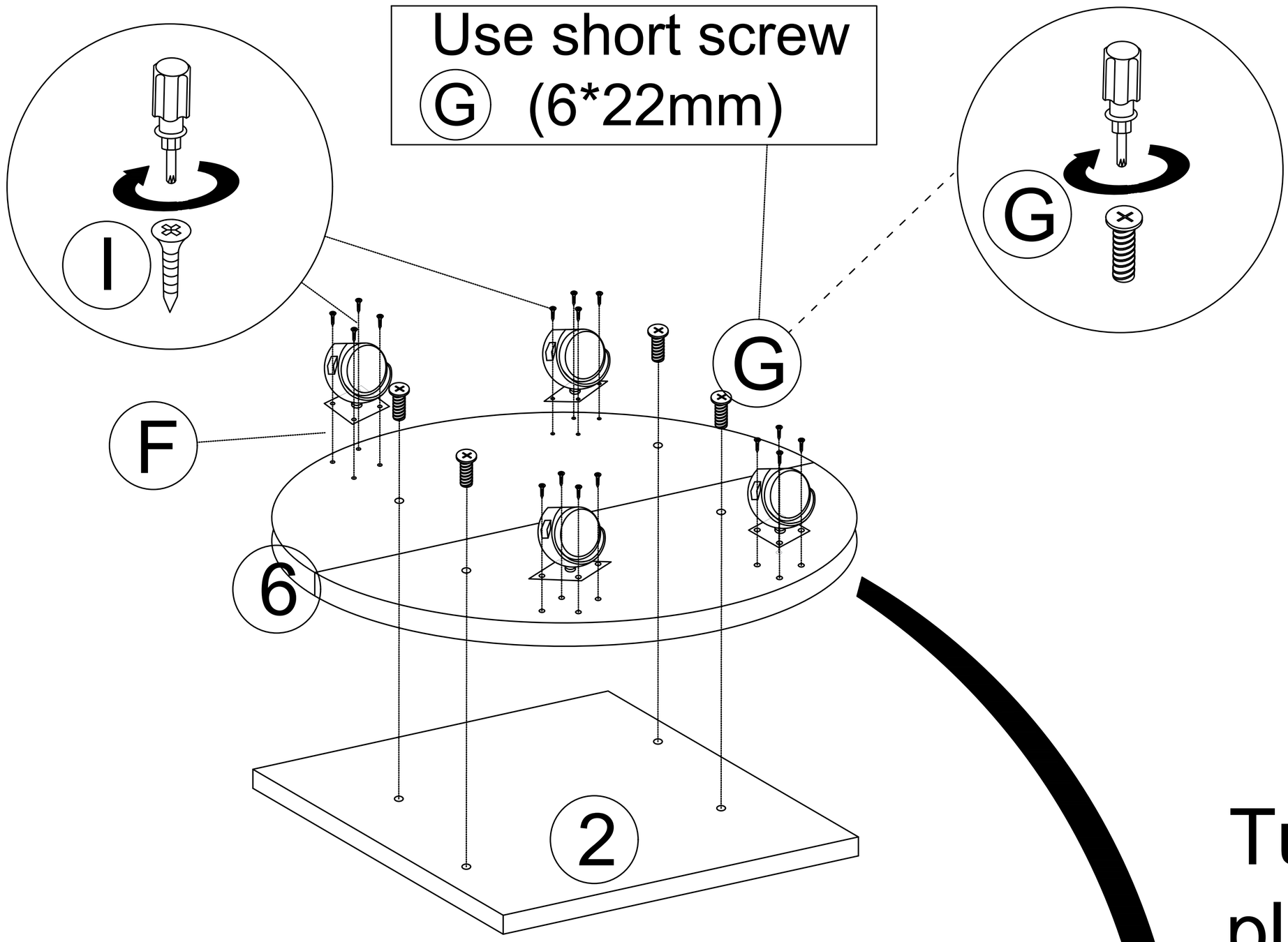

Step 2

A (6*30mm) x 4

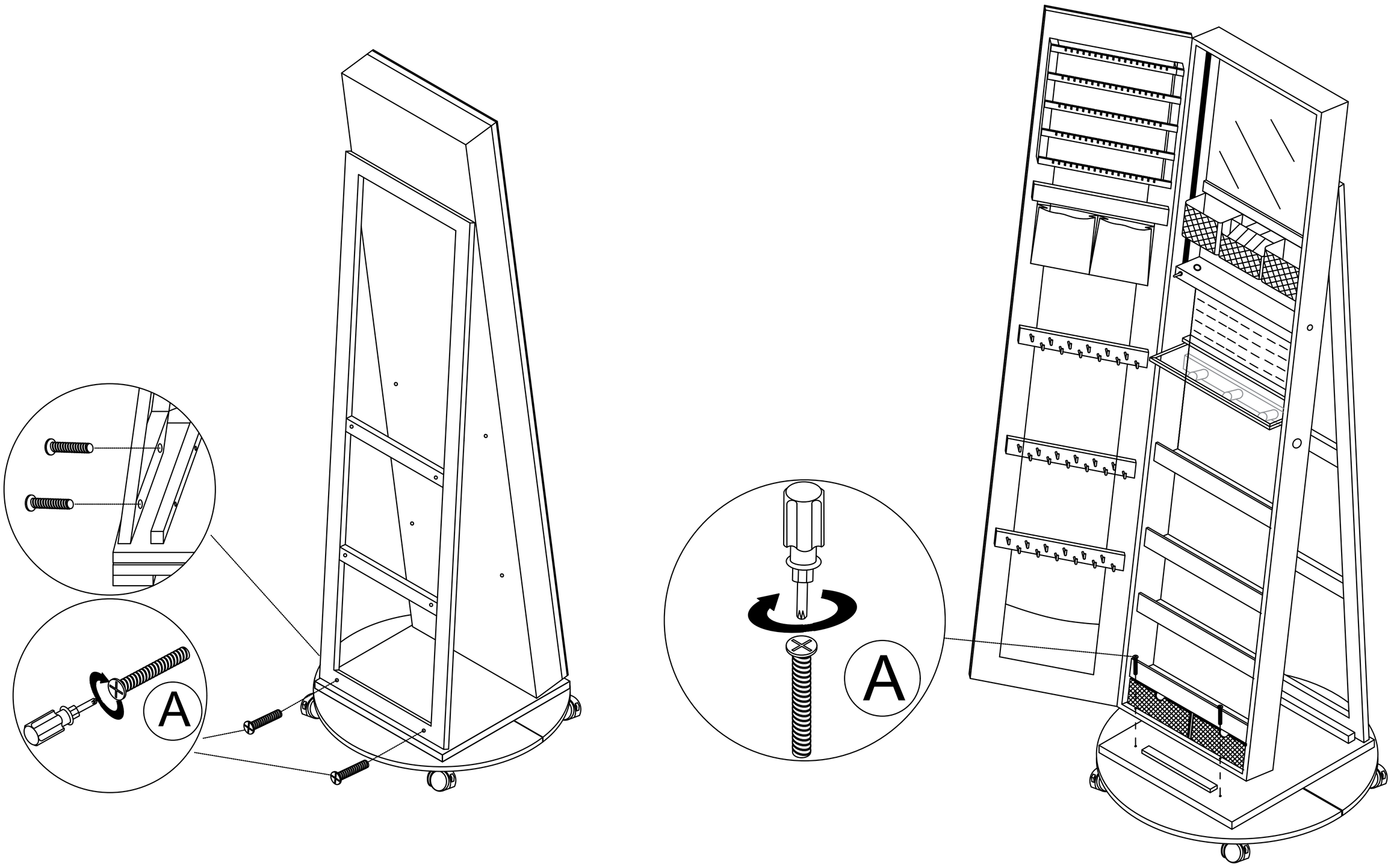

Step 3

K (3x16mm) x 1

D (5*8mm) x 4

C (5*20mm) x 4

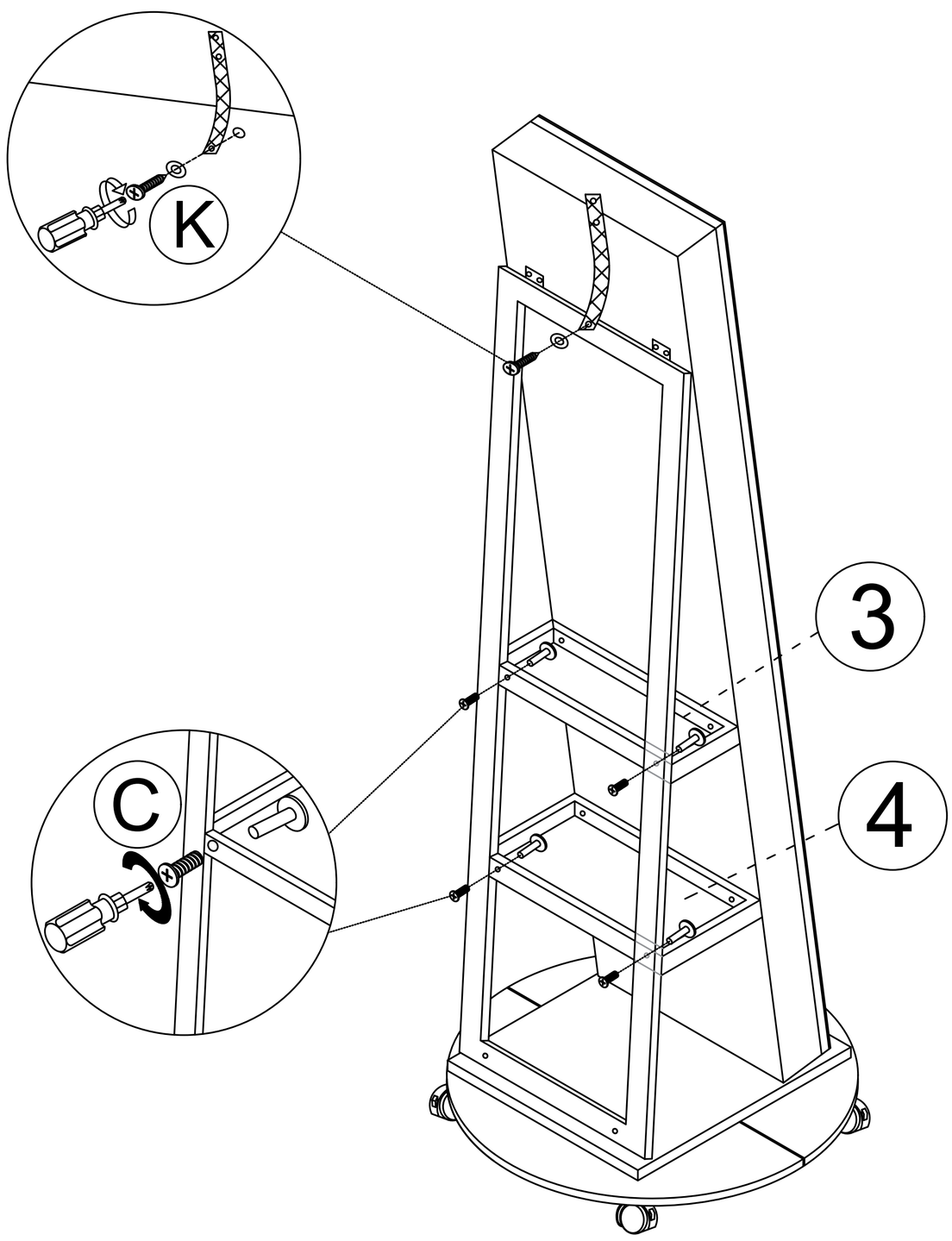

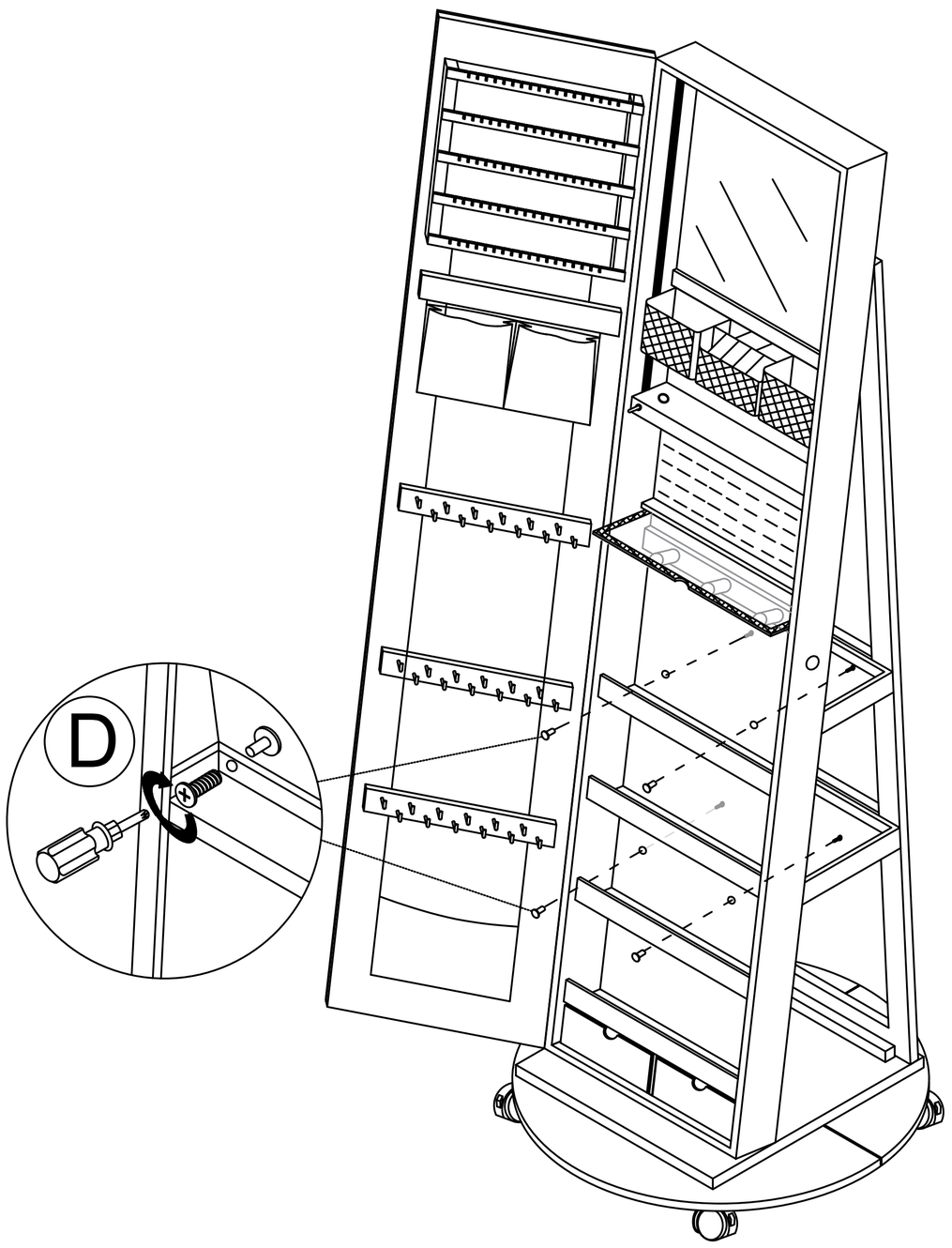

Step 4

K	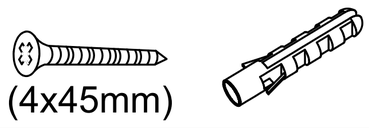 (4x45mm)	x 1
	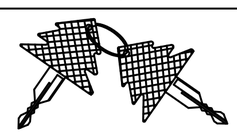	x 1

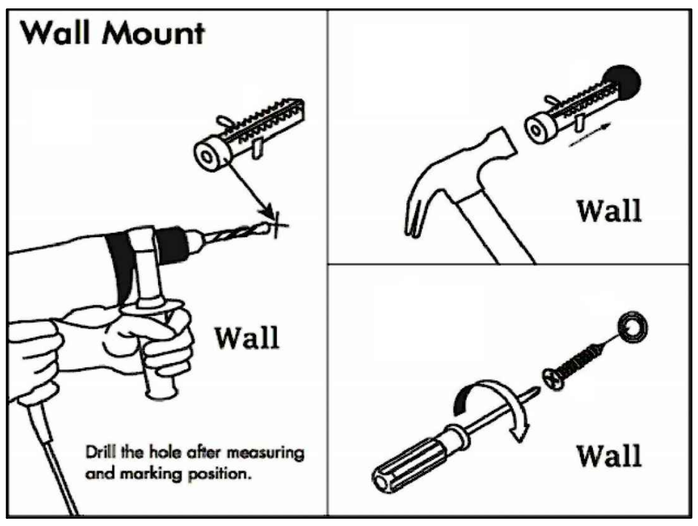

Battery installation

(Tip: use 3 AA batteries)
need to bring your own

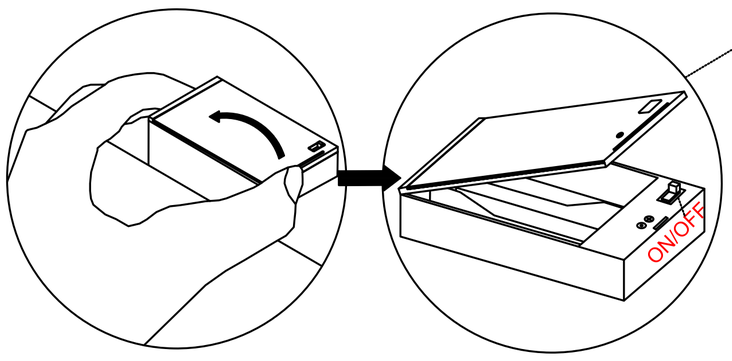

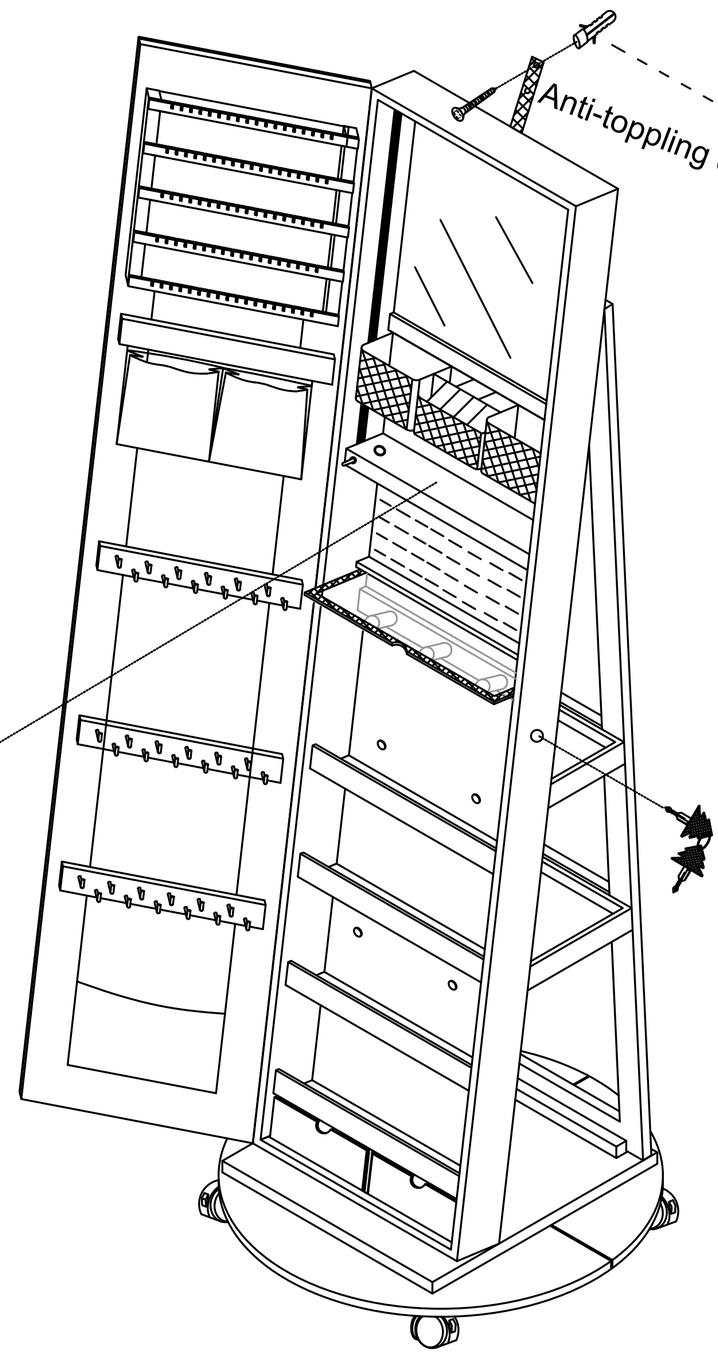

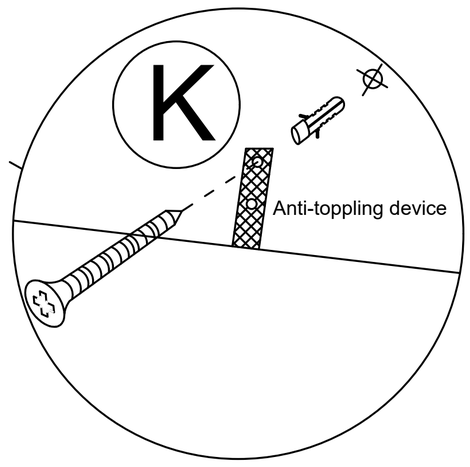

	x 1

