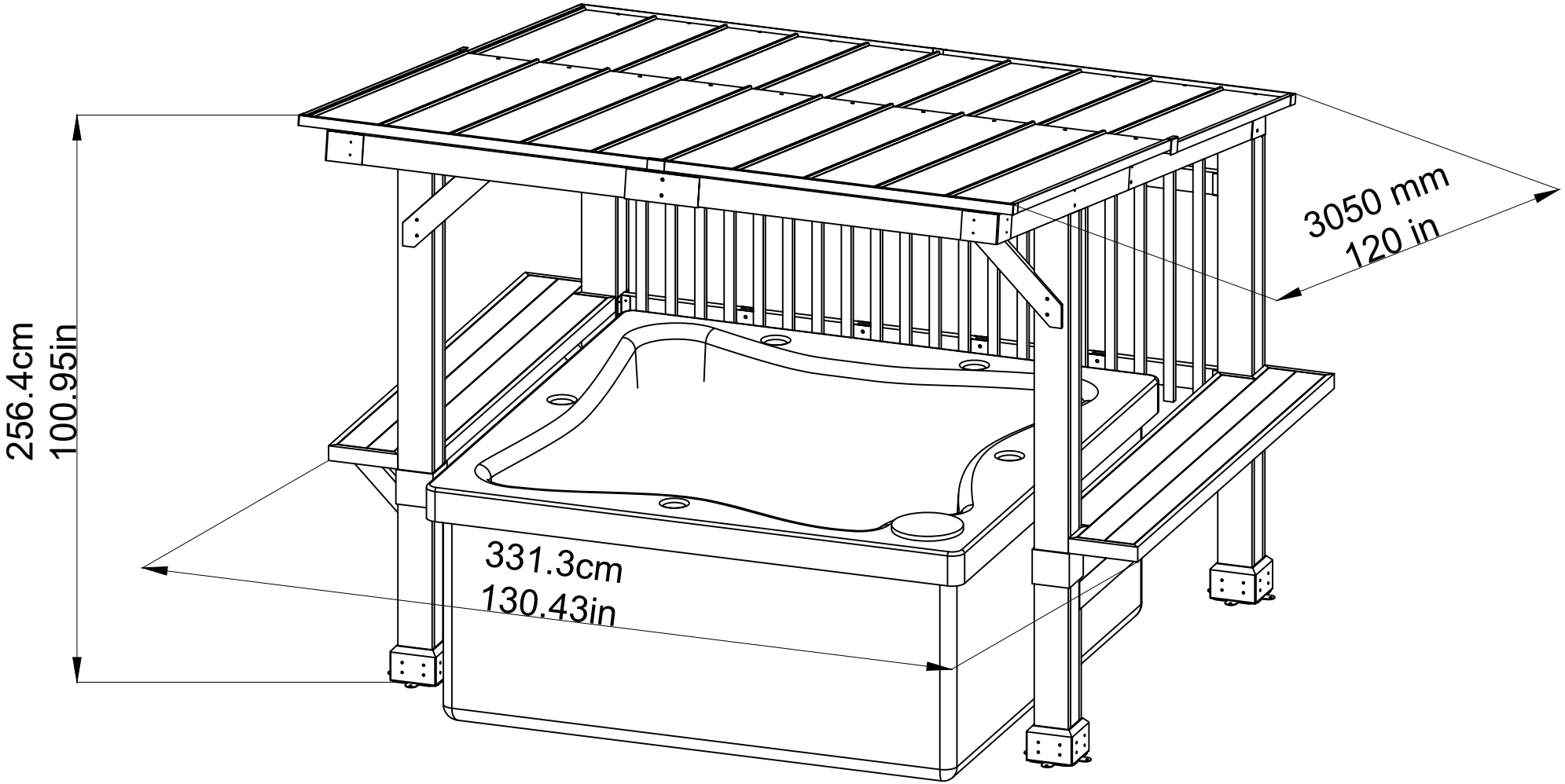
256.4cm
100.95in
3050 mm
120 in
331.3cm
130.43in

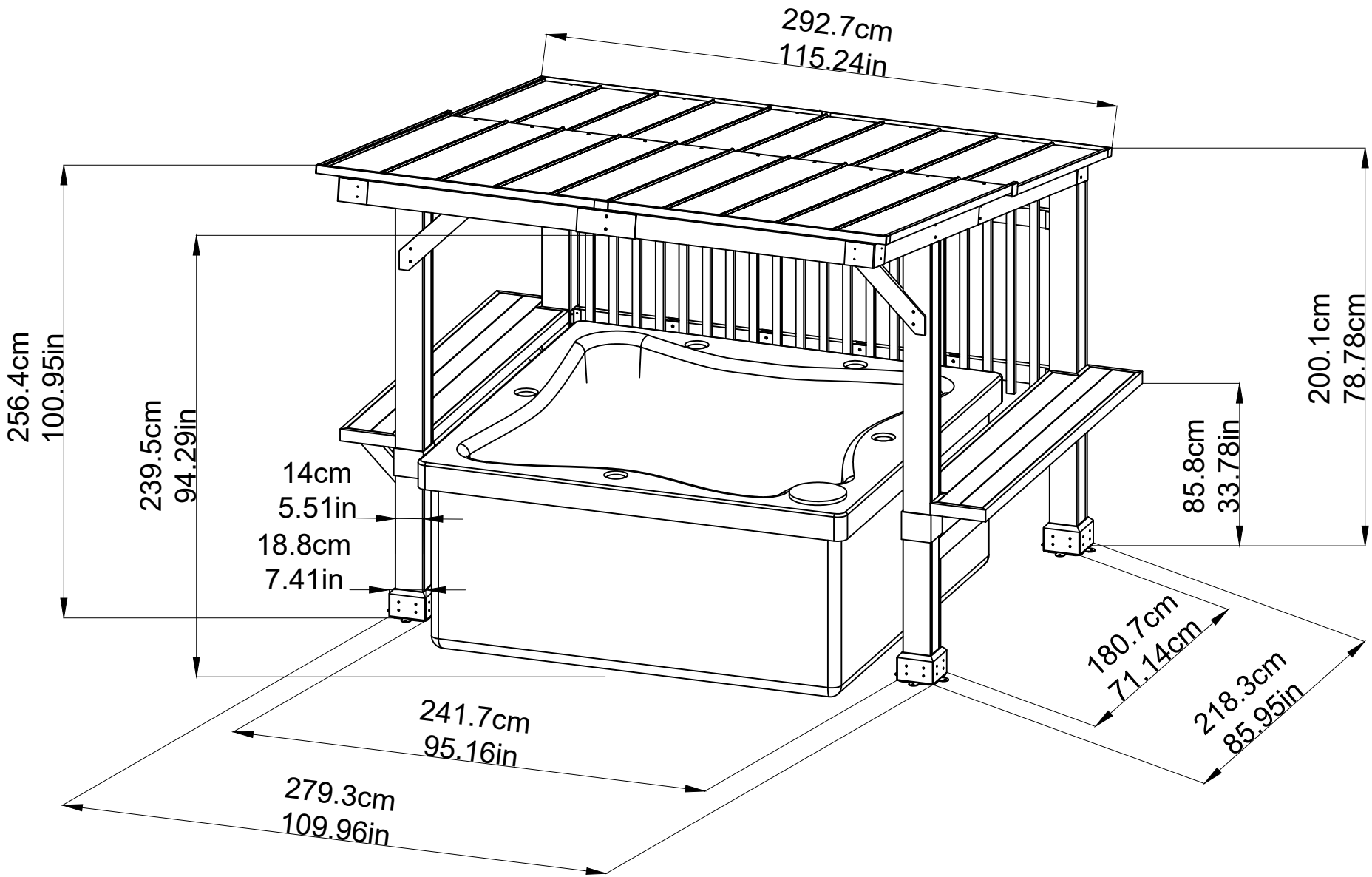
292.7cm
115.24in
256.4cm
100.95in
239.5cm
94.29in
14cm
5.51in
18.8cm
7.41in
200.1cm
78.78cm
85.8cm
33.78in
180.7cm
71.14cm
218.3cm
85.95in
241.7cm
95.16in
279.3cm
109.96in