GATCO

FINE BATHWARE

A-LINE COLLECTION

TOWEL BAR SPECIFICATIONS

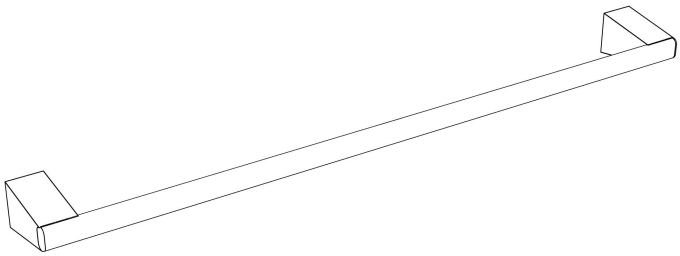

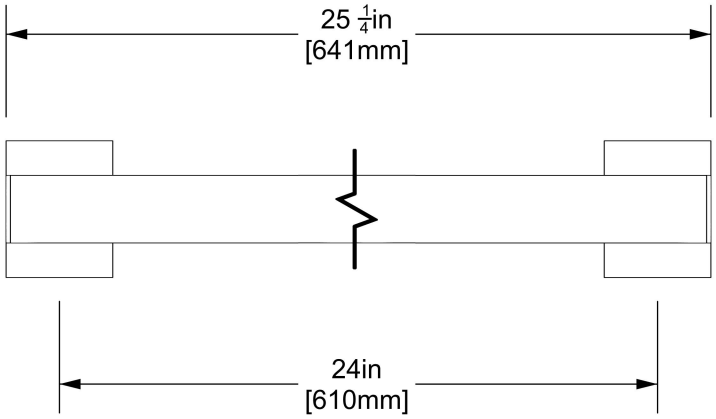

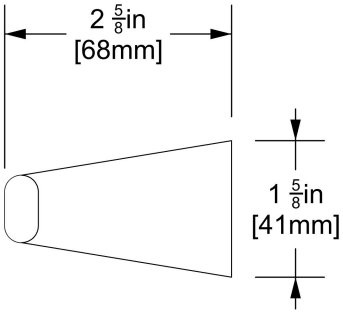

The manufacturer reserves the right to, and do time to time, make changes and improvements in designs and dimensions.
Updated on April 5, 2022