DeerValley®

DV-1SD0446G	48"×76"	Shower Door
PRODUCT MODEL	DIMENSIONS	PRODUCT CATEGORY



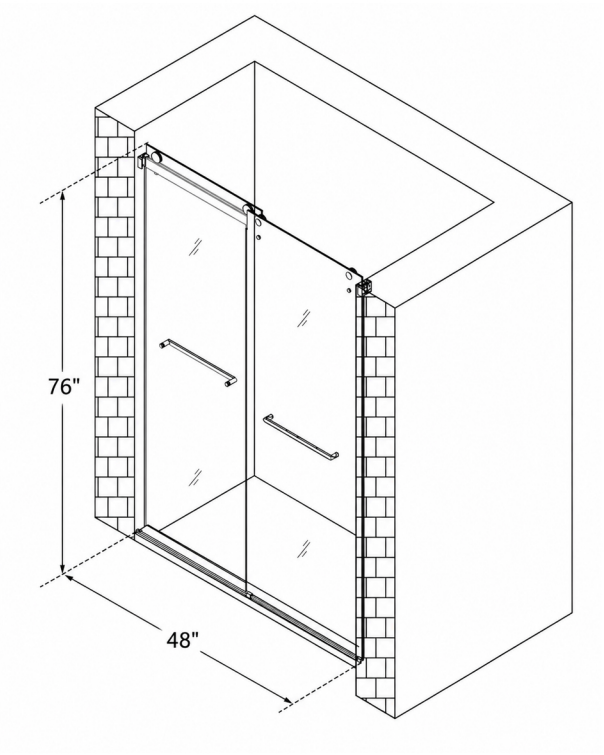

FEATURES

- ANSI-Certified 5/16" Tempered Glass
- Premium Aluminum Alloy Frame
- Effective Wet-Dry Separation
- Frameless Design
- Anti-Jump Rollers
- Easy-Detach Guide Rail
- Stainless Steel Hardware
- 2 Horizontal Handles Included
- Reversible Installation
- Three Color Options Available

SPECIFICATIONS

- Glass Material: Tempered Glass
- Hardware: Stainless Steel
- Product Size: 48"W x 76"H
- Weight: 121 lbs
- Door Type: Double Sliding Door
- Glass Thickness: 5/16"
- Glass Certification: ANSI/SGCC Certified
- Frame Type: Frameless Design
- Glass Finish: Clear Glass

PACKAGE CONTENTS

- Track ×1
- Anti-Jump Wheels ×4
- Pulleys ×4
- ST5×40 Screws ×4
- Expansion Tubes Ø8 ×4
- Pipe Sleeves ×2
- Water Blocking Strips A ×2
- Movable Glass Panels ×2
- Handles ×2
- Water Blocking Plugs ×2
- Lower Slider ×1
- Water Blocking Strip Bottom ×1
- Water Blocking Strips B ×2
- ST4×20 Screws ×4
- Expansion Tubes Ø6 ×4

INSTALLATION

- Wall & Floor Drilled Installation

COLOR

Brushed Gold

service@deervalleybath.com
(312) 626-9466

5-Year Limited Warranty