ASSEMBLY INSTRUCTION

TOOL

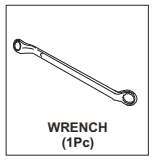

WRENCH
(1Pc)

HARDWARE

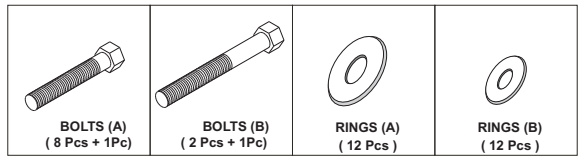

BOLTS (A)
(8 Pcs + 1Pc)

BOLTS (B)
(2 Pcs + 1Pc)

RINGS (A)
(12 Pcs)

RINGS (B)
(12 Pcs)

PRODUCT PARTS

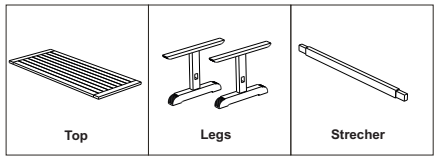

Top

Legs

Strecher

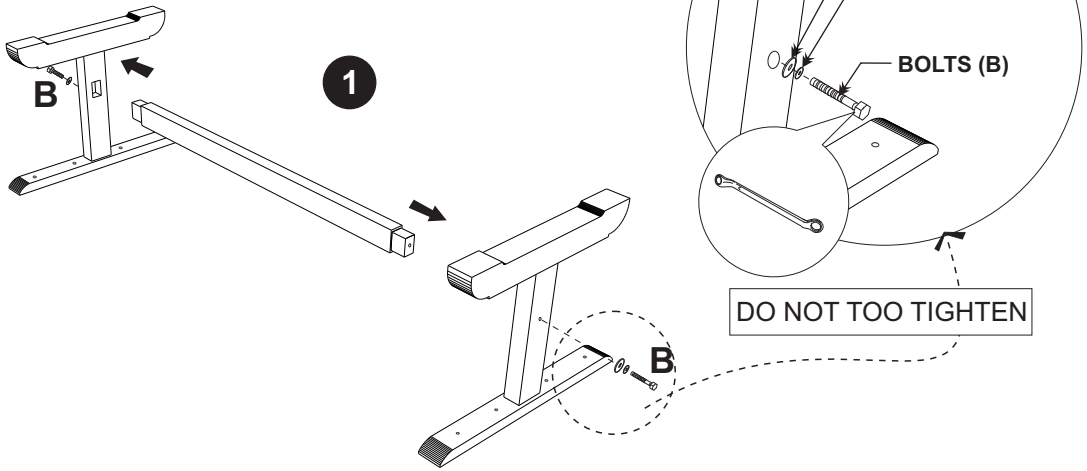

DO NOT TOO TIGHTEN

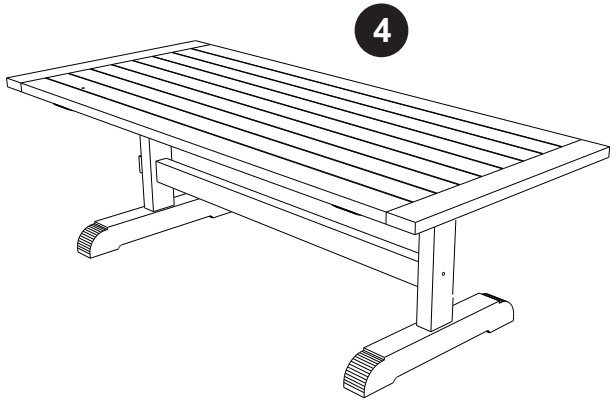

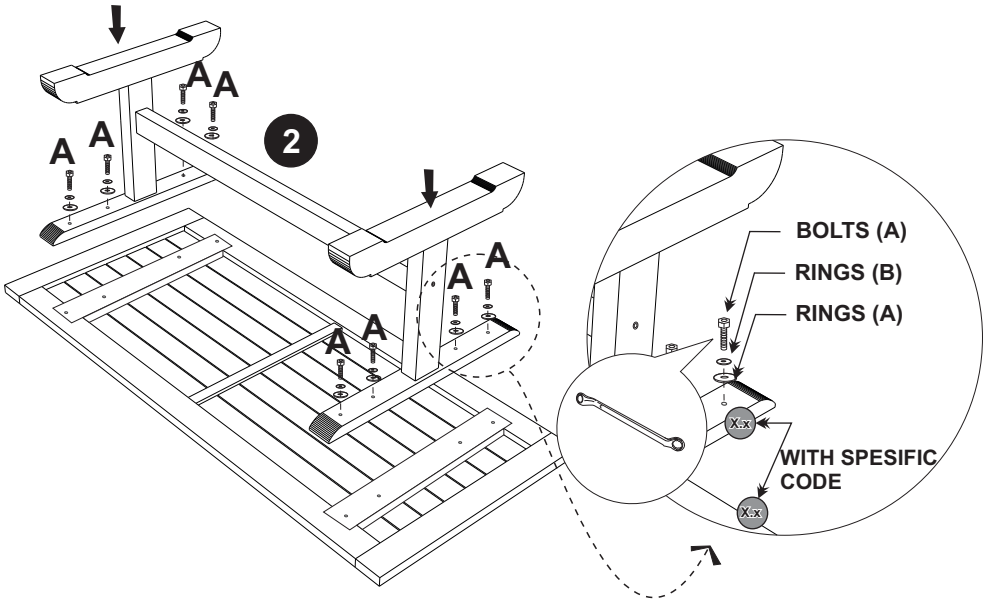

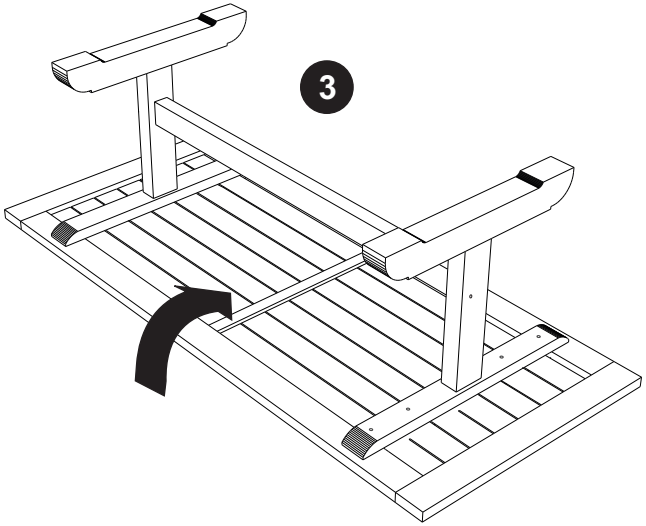

TIGHTEN COMPLETELY AFTER ALL BOLTS ARE IN PLACED