ASSEMBLY INSTRUCTIONS

CAREFULLY PLACE ALL PARTS ON A SMOOTH SURFACE
AND LAY THEM UP PER THE SKETCH BELOW.

1. SCREW THE TUBE (B） TO THE BASE (A).

2. SCREW THE BODY (C) TO THE TUBE(B).

3. FIX THE GLASS TABLETOP (D) TO THE BODY (C).

4. SCREW THE TUBE (E) TO THE GLASS TABLETOP(D)

5. SCREW THE SOCKET PART (F) TO THE TUBE (E)

6.INSERT THE HARP(H) INTO SADDLE OF THE SOCKET PART (F).

7.PUT THE SHADE(I) ONTO THE HARP(H) AND TIGHTEN
WITH THE FINIAL(J)

8. INSTALL RECOMMENDED BULB(G),
BULB NOT INCLUDED IN THIS PACKAGE.

9. INSERT THE PLUG INTO AN OUTLET.

ENJOY YOUR LAMP!!

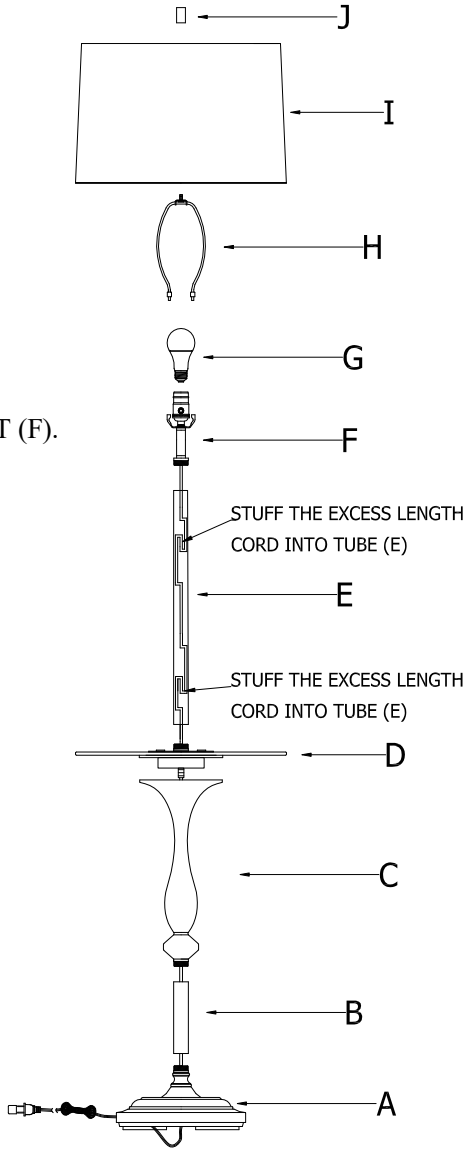

****** 1 USB PORT AND 1 TYPE-C CHARGING PORT PROVIDED! ******

Use Max 150W 3-WAY type A bulb (bulbs not included)

** TO REDUCE THE RISK OF ELECTRIC SHOCK, ALWAYS UNPLUG FROM THE ELECTRICAL OUTLET BEFORE INSTALLATION.*
** THIS FIXTURE IS SUITABLE FOR DRY LOCATION ONLY.*
** THIS FIXTURE SHOULD ONLY BE CLEANED WITH A SOFT LINT FREE CLOTH DAMPLED WITH WATER. DO NOT USE ANY CHEMICAL OR ABUSIVE CLEANER AS THEY MAY DAMAGE THE SURFACE OF THE PRODUCTS.*

THIS PORTABLE LAMP HAS A POLARIZED PLUG (ONE BLADE IS WIDER THAN THE OTHER) AS A SAFETY FEATURE TO REDUCE THE RISK OF ELECTRIC SHOCK. THIS PLUG WILL FIT IN A POLARIZED OUTLET ONLY ONE WAY. IF IT DOES NOT FIT FULLY IN THE OUTLET, REVERSE THE PLUG. IF IT STILL DOES NOT FIT, CONTACT A QUALIFIED ELECTRICIAN. NEVER USE WITH AN EXTENSION CORD UNLESS THE PLUG CAN BE FULLY AND EASILY INSERTED. DO NOT ATTEMPT TO ALTER THE PLUG.

SAVE THESE INSTRUCTIONS FOR FUTURE REFERENCE.