DA0407

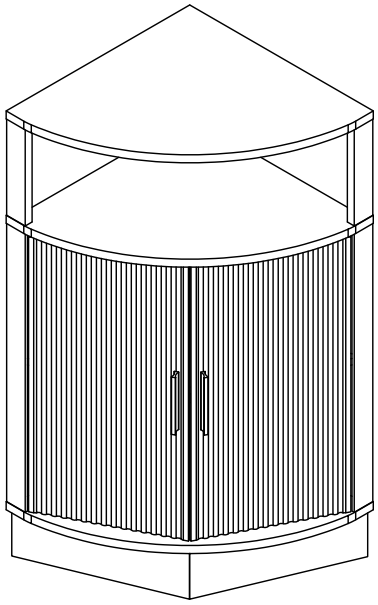

As this item contains many parts, please read the installation instruction carefully before installation . Please use tools properly and carefully. If you have any questions about the product and installation, please contact us.

hosoteservice@gmail.com

Our professional after-sales team will serve you online all day.

Before You Start

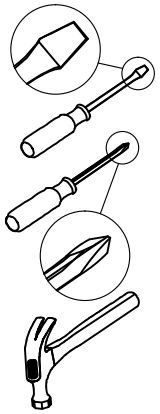

- Read through each step carefully and follow the proper order
- Separate and count all your parts and hardware
- Give yourself enough room for the assembly process
- Have the following tools: Flat Head Screwdriver, #2 Phillips Head Screwdriver and Hammer
- Caution: If using a power drill or power screwdriver for screwing, please be aware of to slow down and stop when screw is tight. Failure to do so may result in stripping the screw. （Assembly speed can be increased by using electric screwdriver）

Helpful Hints

PEOPLE NEEDED FOR ASSEMBLY: **1-2**

- Open your item in the area you plan to keep it to avoid excessive heavy lifting.



- Identify, sort and count the parts before attempting assembly.



- Compression dowels are lightly tapped in with a hammer.

- Slides are labeled with an **R** (right) and **L** (left) for proper placement.

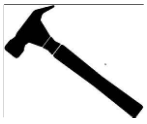

- Make sure to always face the point on the top of the Cam Lock towards the outer edge.



- If there is a back panel in the package, please install it to make sure your unit is complete and sturdy.



-Please fix all the screws provided for the back panel which can enhance product stability. If it is difficult to fix it when tightening, it can be fixed with the help of a hammer and then tightened.



- Do NOT use harsh chemicals or abrasive cleaners on this item.

- Never push, pull, or drag your furniture.

Board Identification

Not actual size

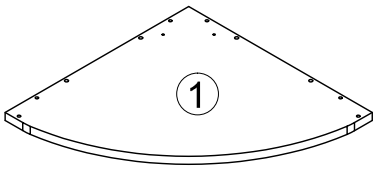

TOP PANEL
Qty:1

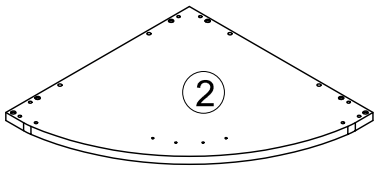

FIXED PANEL
Qty:1

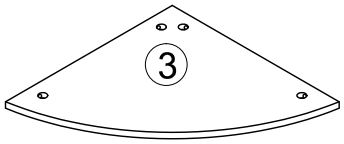

FIXED PANEL
Qty:1

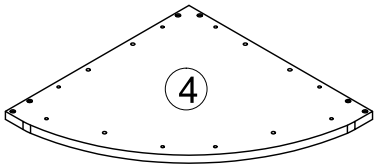

BOTTOM PANEL
Qty:1

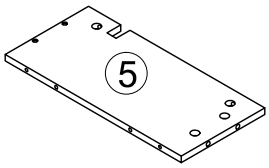

Qty: 1

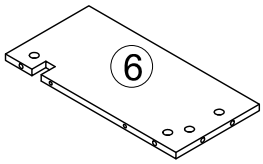

Qty:1

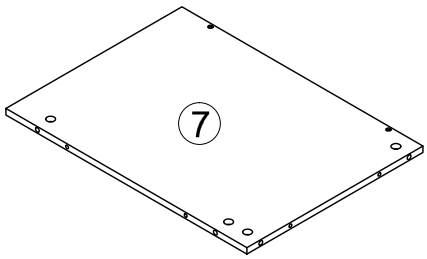

Qty:1

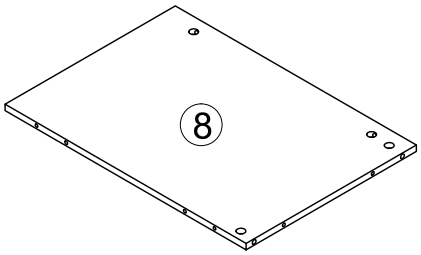

Qty:1

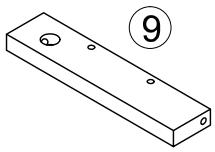

Qty:1

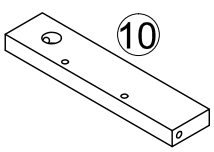

Qty:1

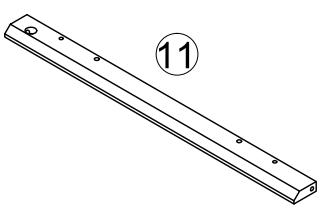

Qty:1

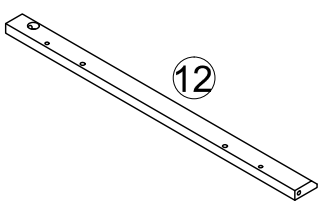

Qty:1

Board Identification

Not actual size

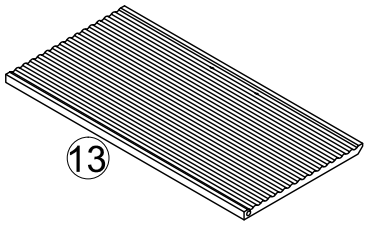

Qty:1

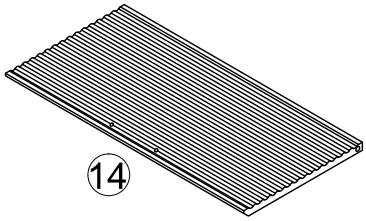

Qty:1

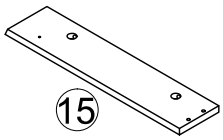

Qty:1

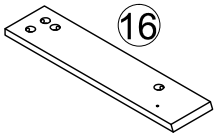

Qty:1

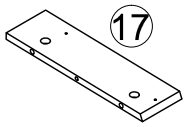

Qty:1

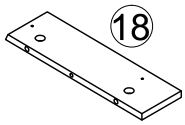

Qty:1

Part List

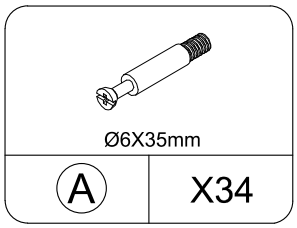

CAM BOLT
spare:3

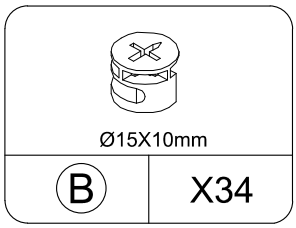

CAM LOCK
spare:3

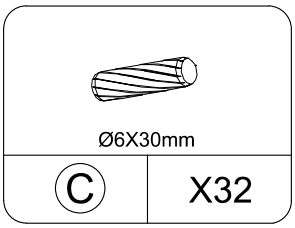

WOOD DOWEL
spare:3

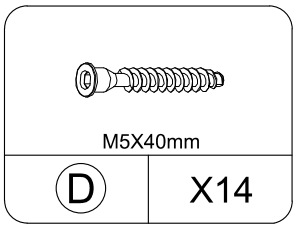

BOLT
spare:2

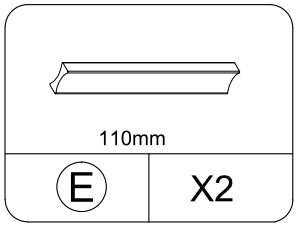

HANDLE

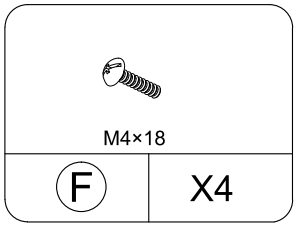

BOLT
spare:1

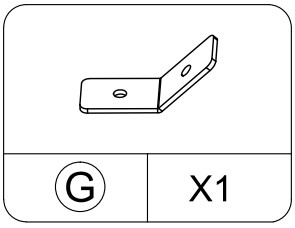

METAL PLATE

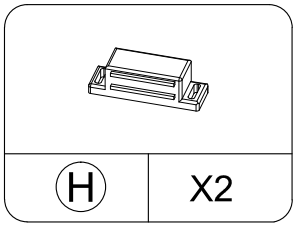

MAGNET

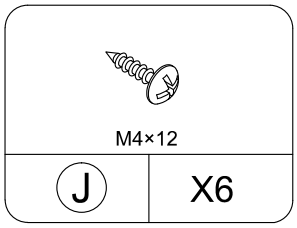

SCREW
spare:1

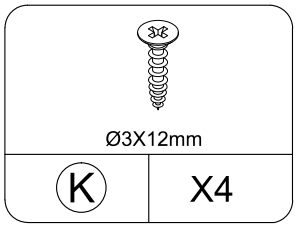

SCREW
spare:1

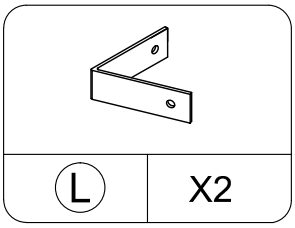

METAL PLATE

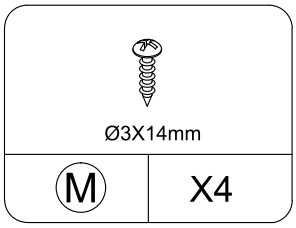

SCREW
spare:1

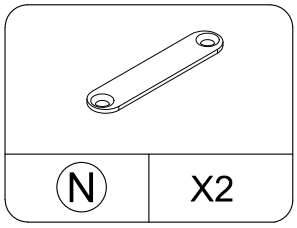

METAL PLATE

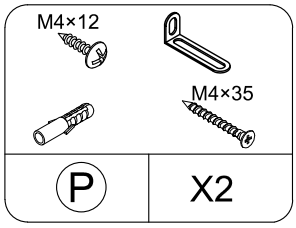

PREVENTIVE DUMPING ACCESSORIES

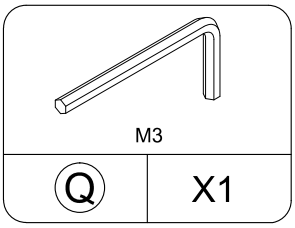

ALLEN KEY

Part List

Cam Lock Fastening System

Insert the cam bolt into the hole first, then insert the cam lock and lock it.

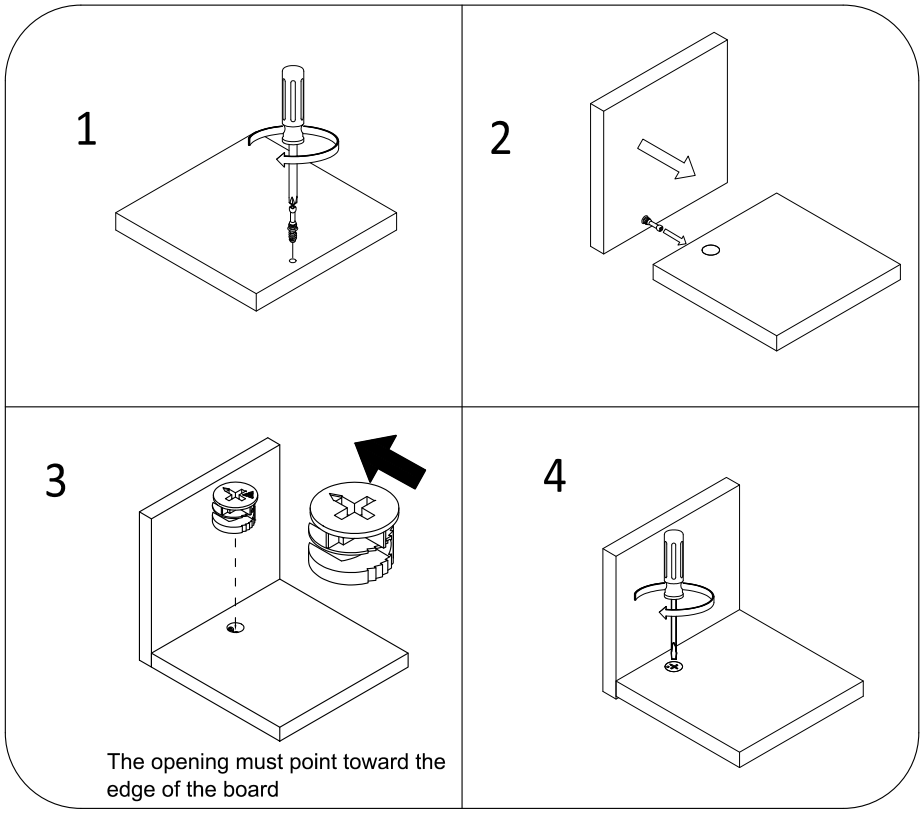

Board Identification

Not actual size

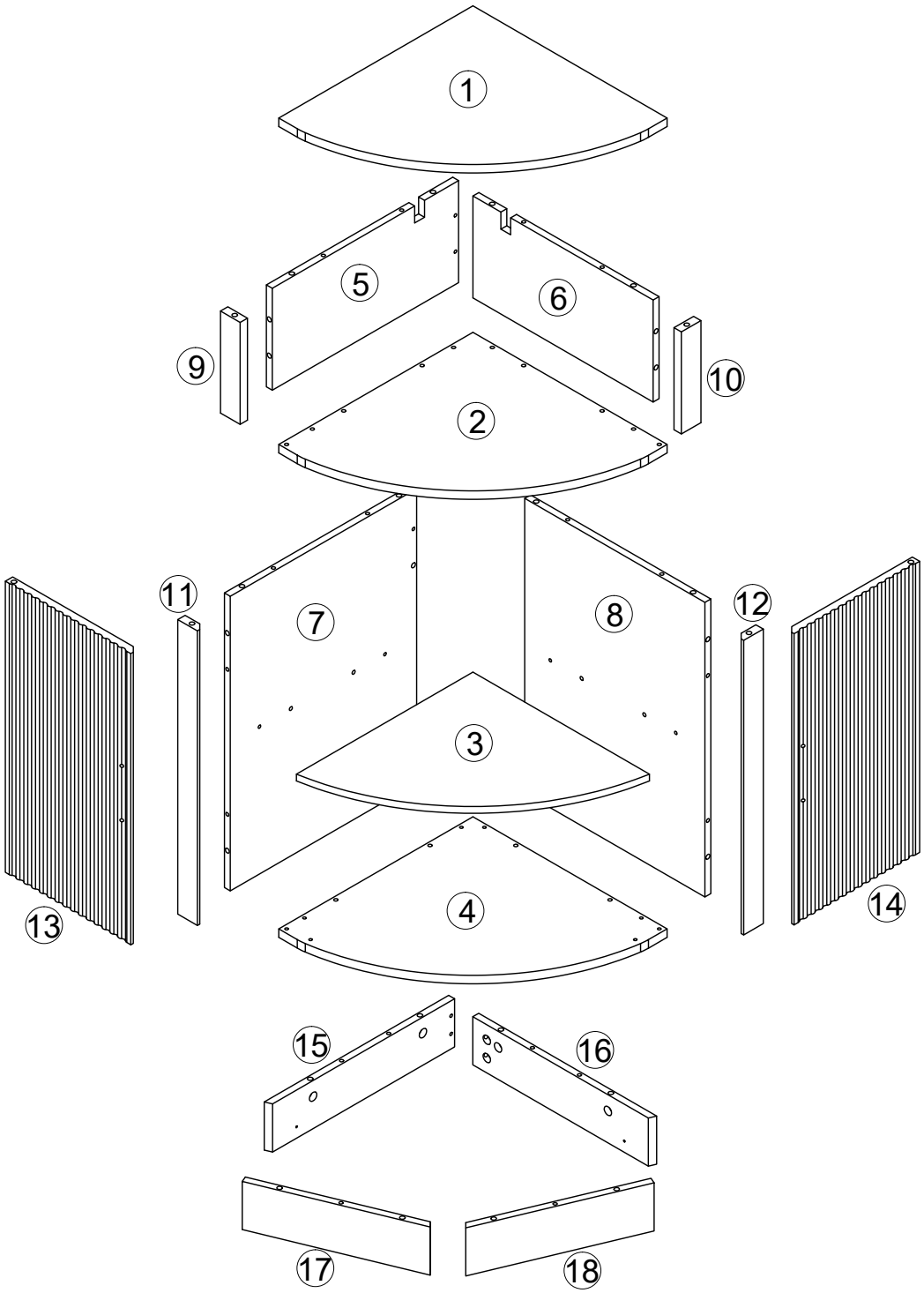

STEP1

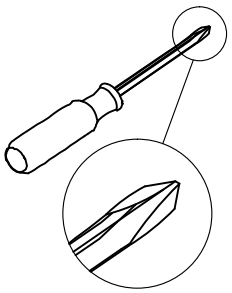

Ø6X35mm	M5X40mm	M3
A X4	D X2	Q X1

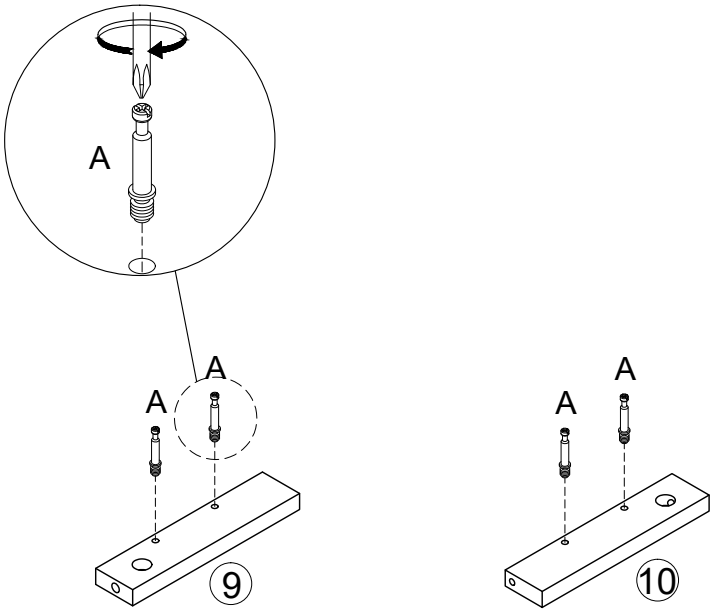

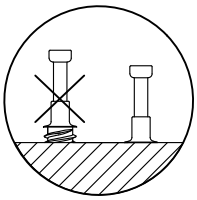

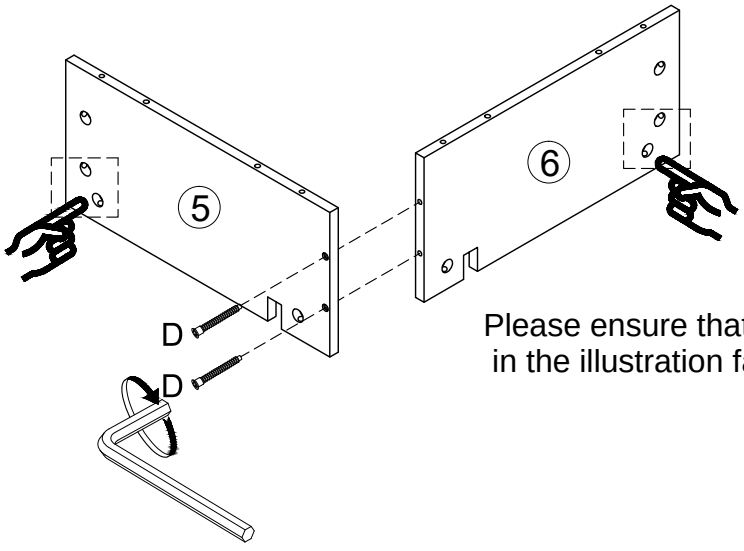

Please ensure that the holes shown in the illustration face outward

STEP2

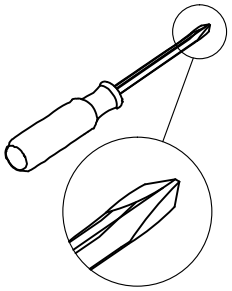

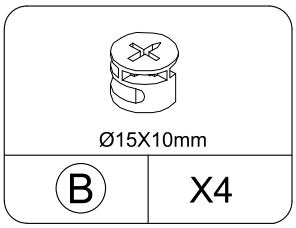

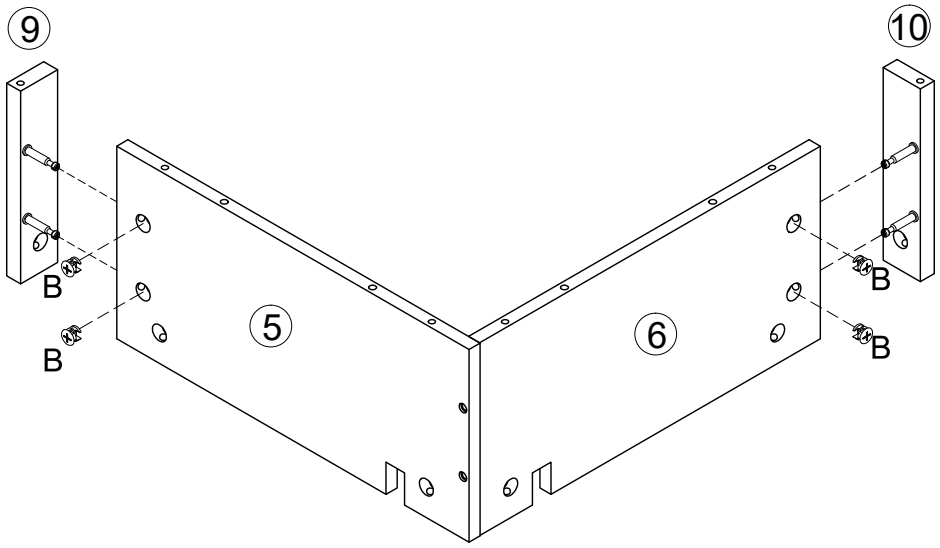

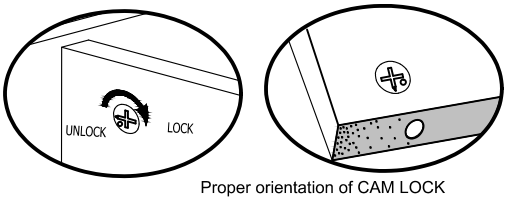

Proper orientation of CAM LOCK

STEP3

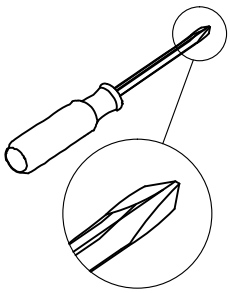

Ø6X35mm	Ø15X10mm	Ø6X30mm	M4×12
A X6	B X6	C X4	P X2

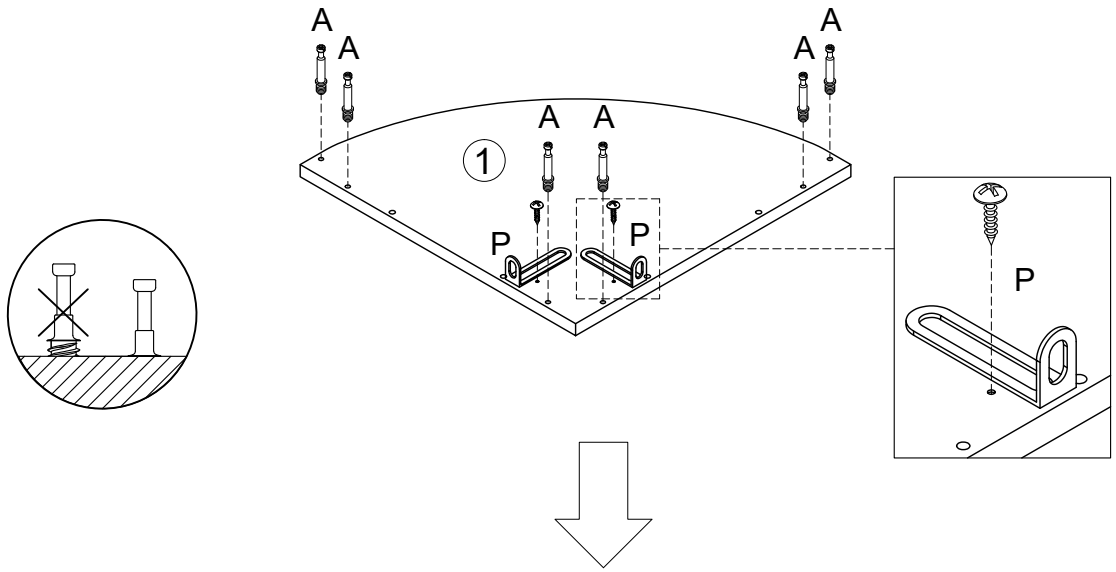

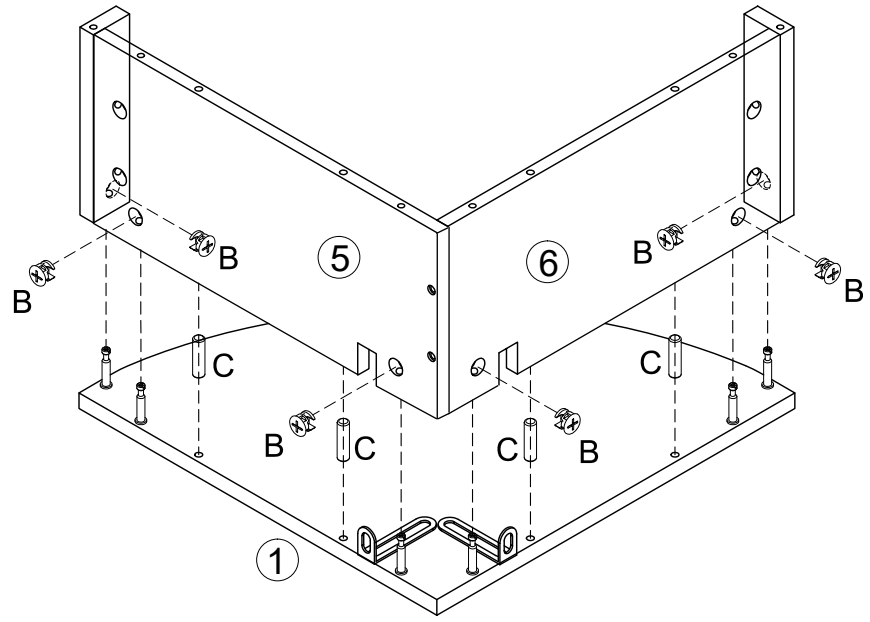

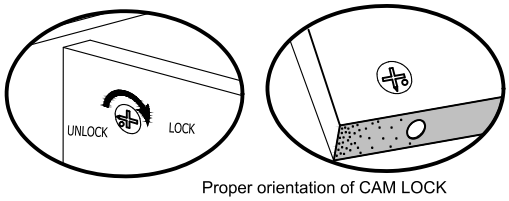

Proper orientation of CAM LOCK

STEP4

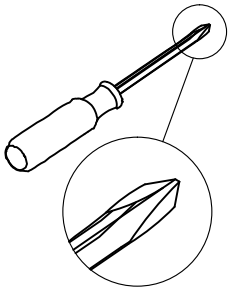

Ø6X30mm	M5X40mm	M3
C X4	D X6	Q X1

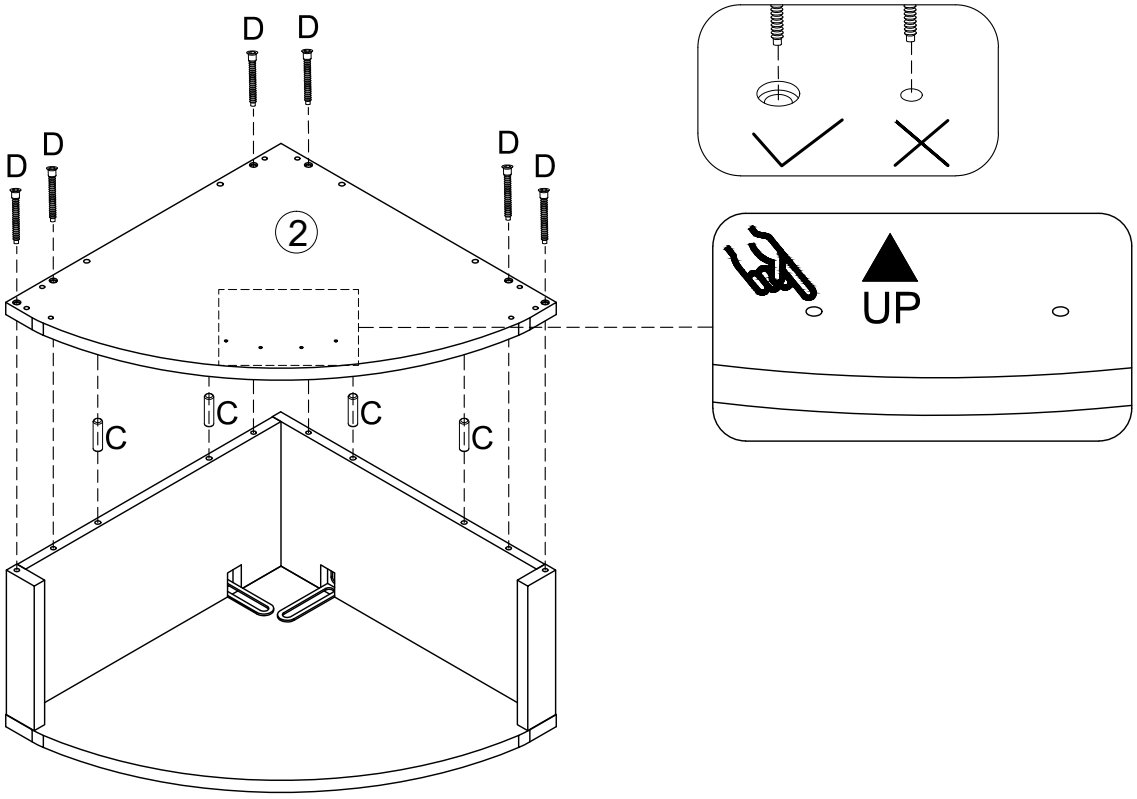

STEP5

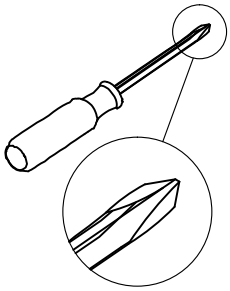

Ø6X35mm		Ø3X14mm	
A	X6	H	X2	M	X4

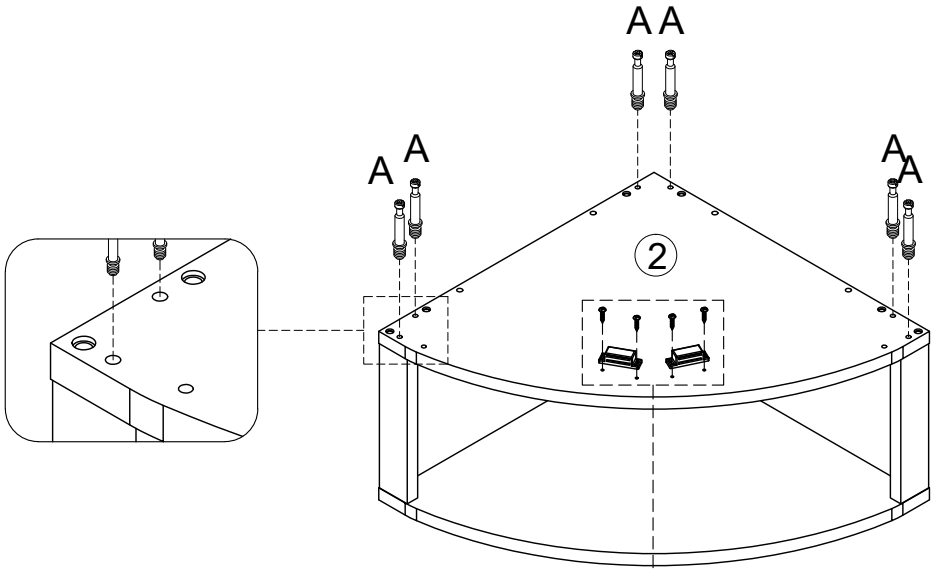

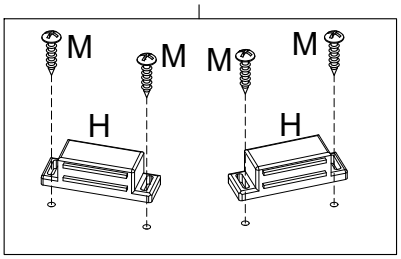

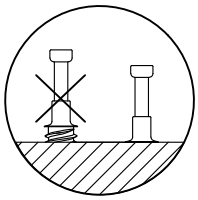

STEP6

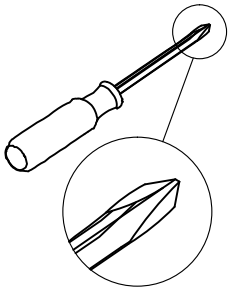

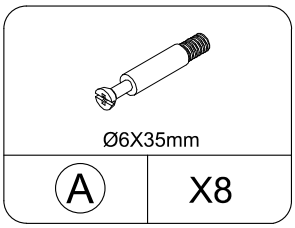

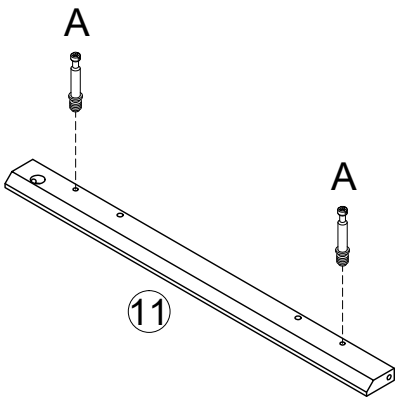

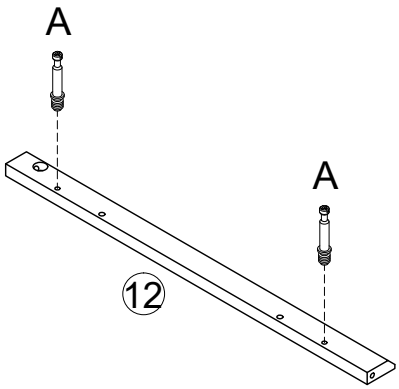

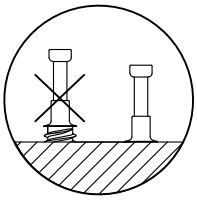

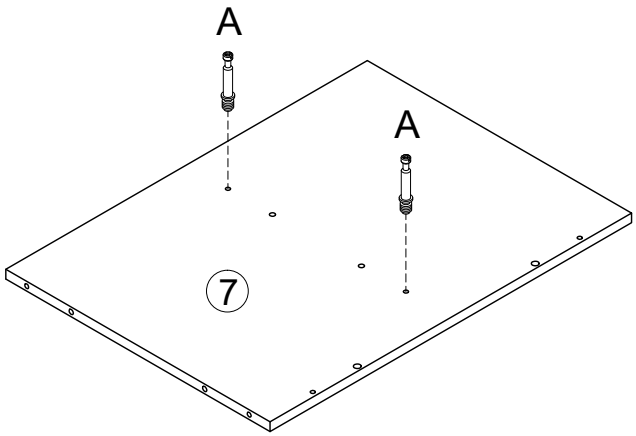

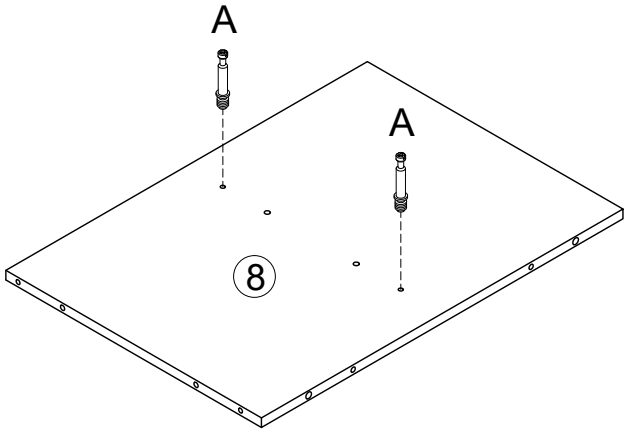

STEP7

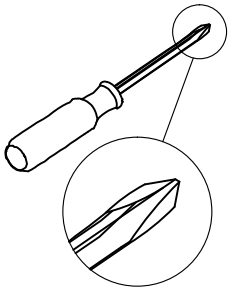

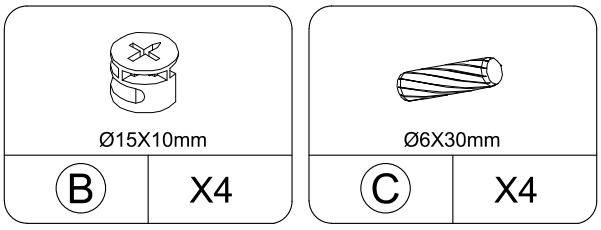

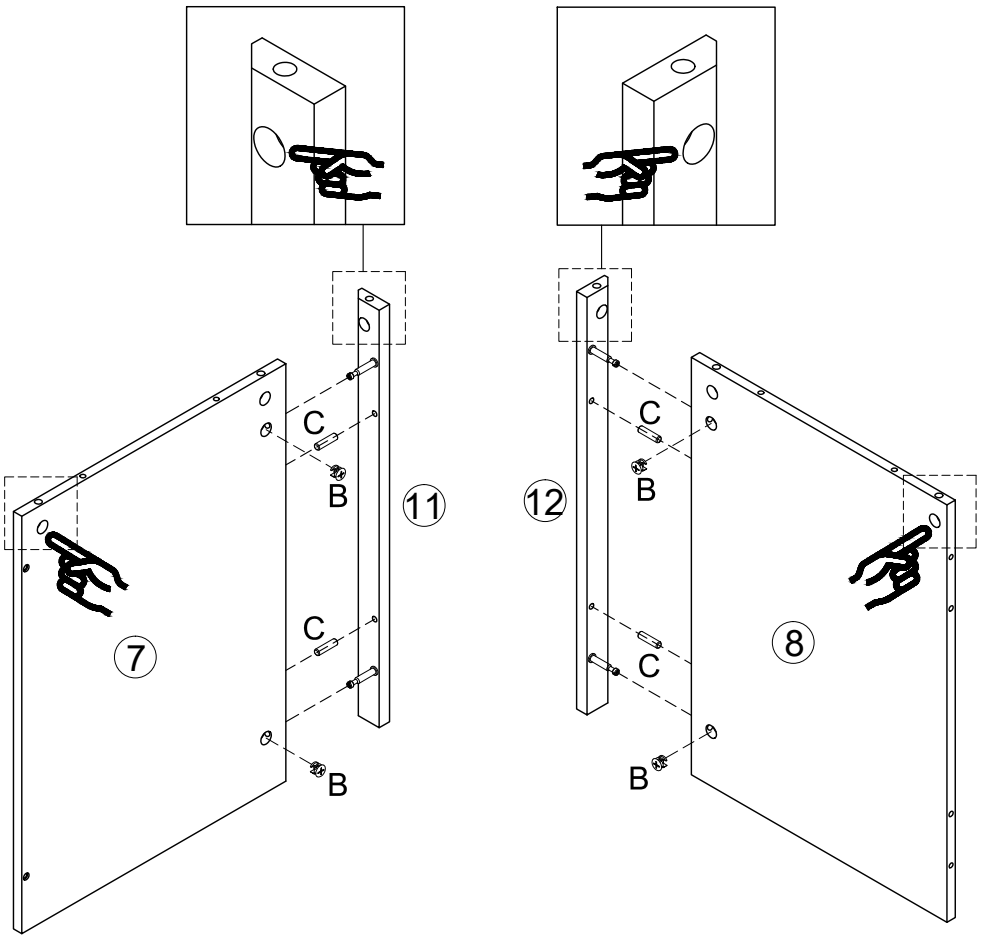

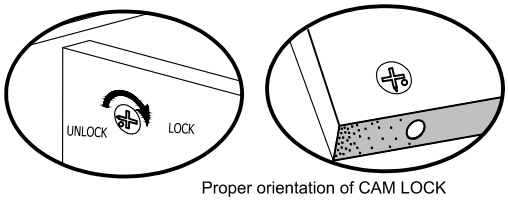

Proper orientation of CAM LOCK

STEP8

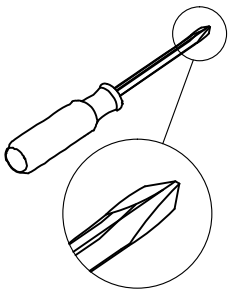

Ø15X10mm	Ø6X30mm	M5X40mm	M3
			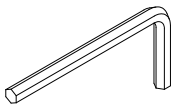
B X4	C X6	D X2	Q X1

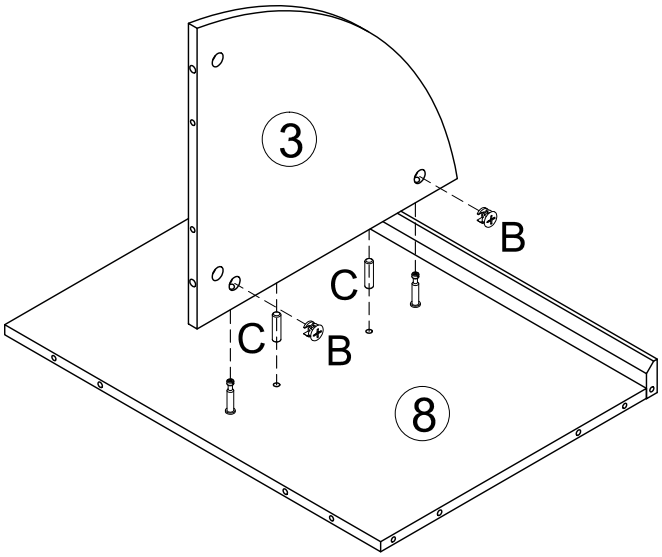

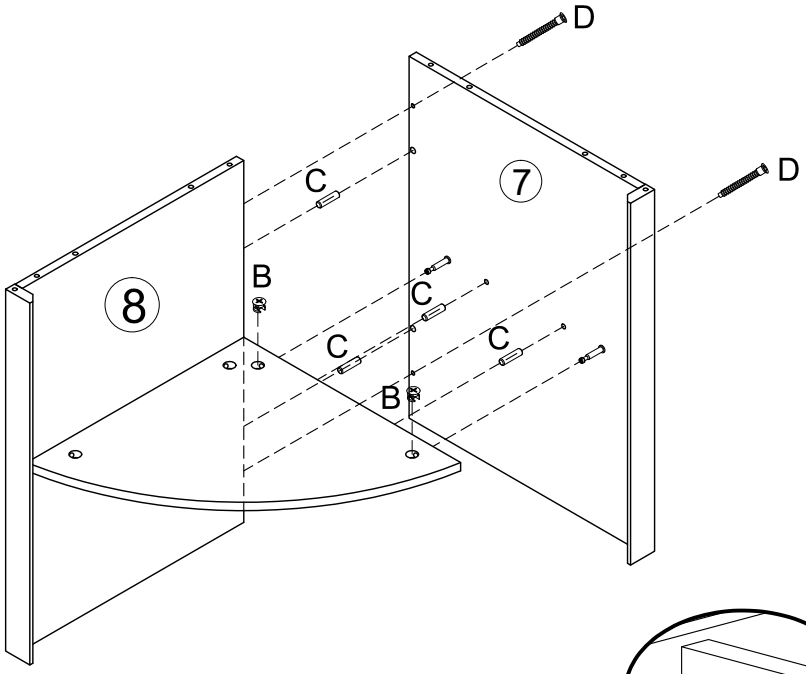

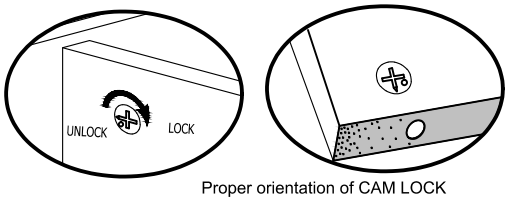

Proper orientation of CAM LOCK

STEP9

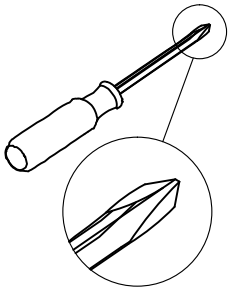

Ø6X35mm	Ø6X30mm	M5X40mm	M3
A X8	C X4	D X6	Q X1

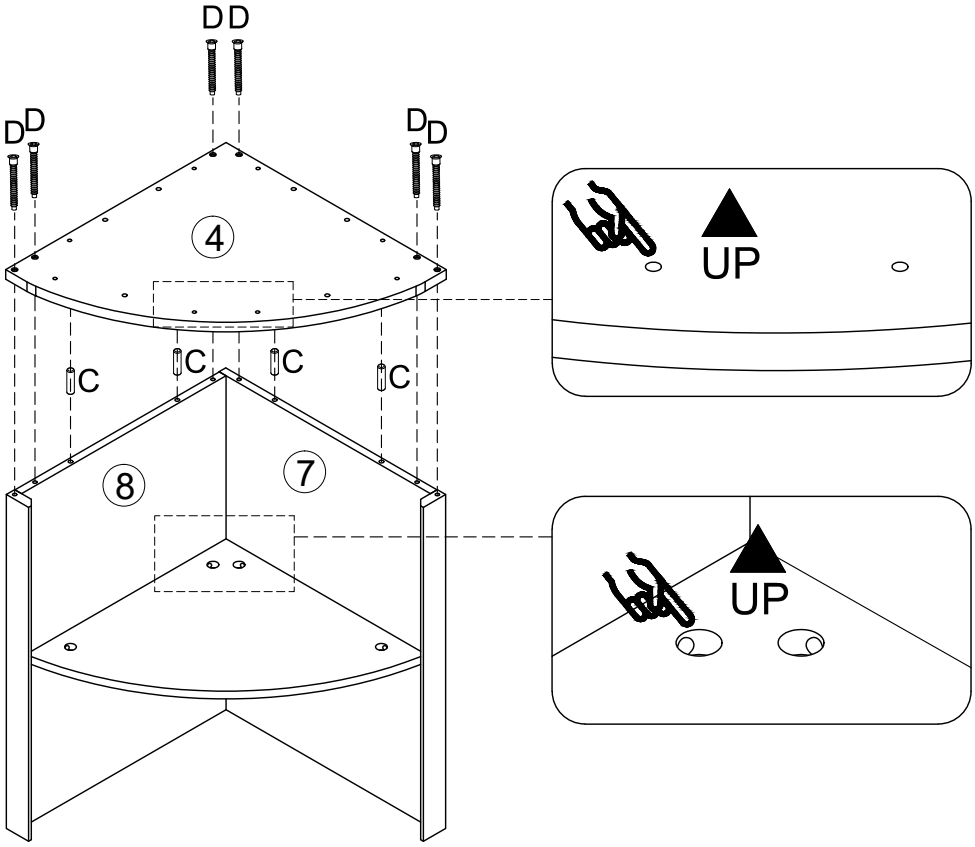

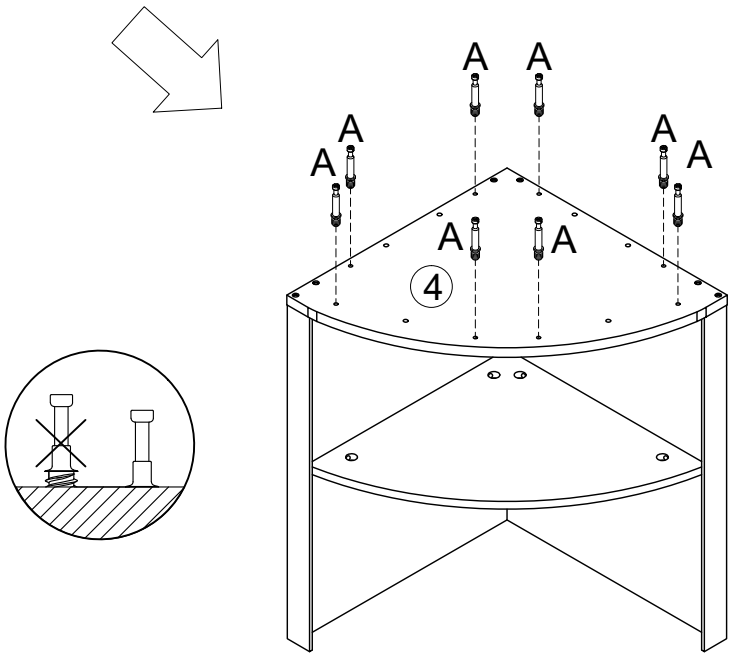

STEP10

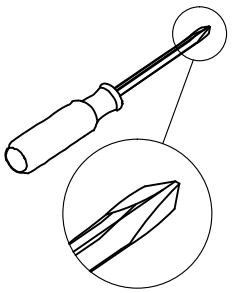

Ø6X35mm	Ø15X10mm		M4×12
A X2	B X2	G X1	J X2

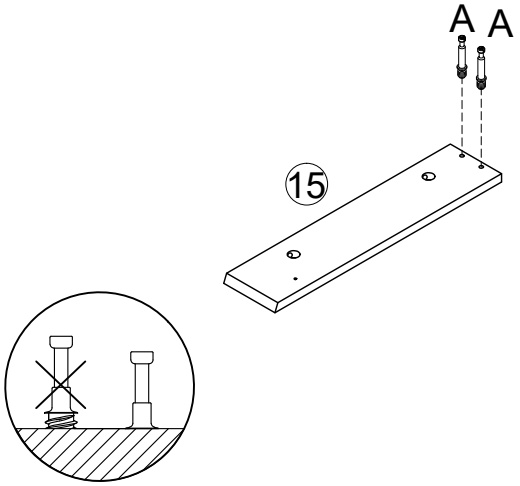

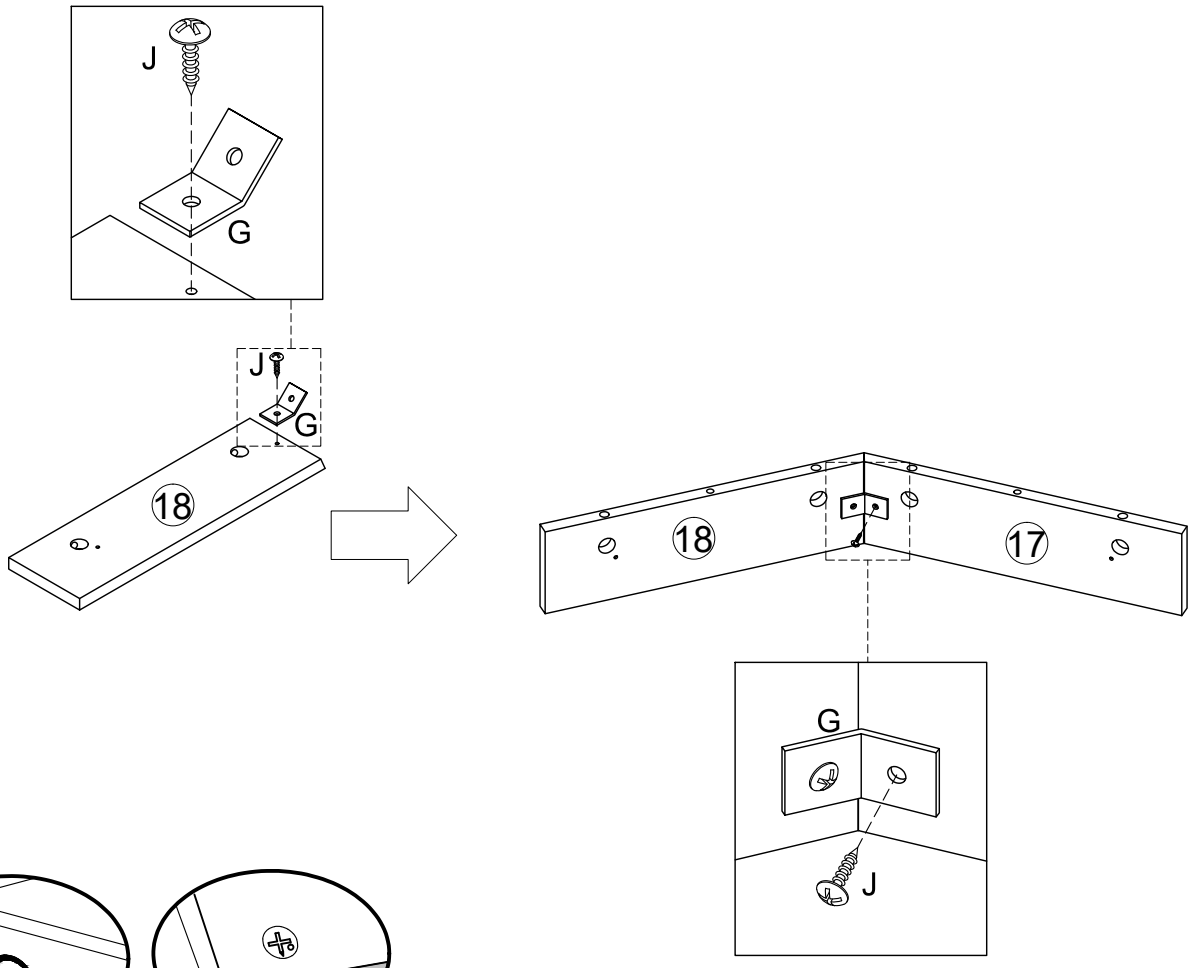

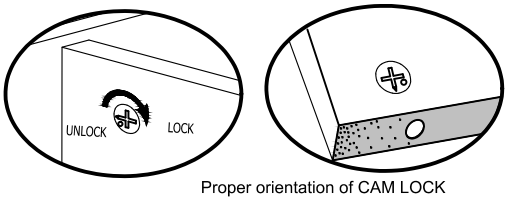

Proper orientation of CAM LOCK

STEP11

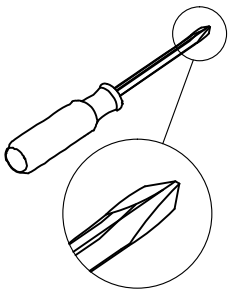

Ø15X10mm	Ø6X30mm		M4×12
B X4	C X4	L X2	J X2

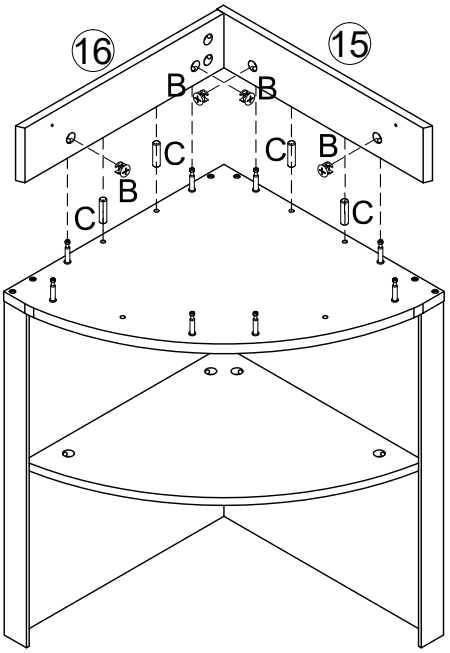

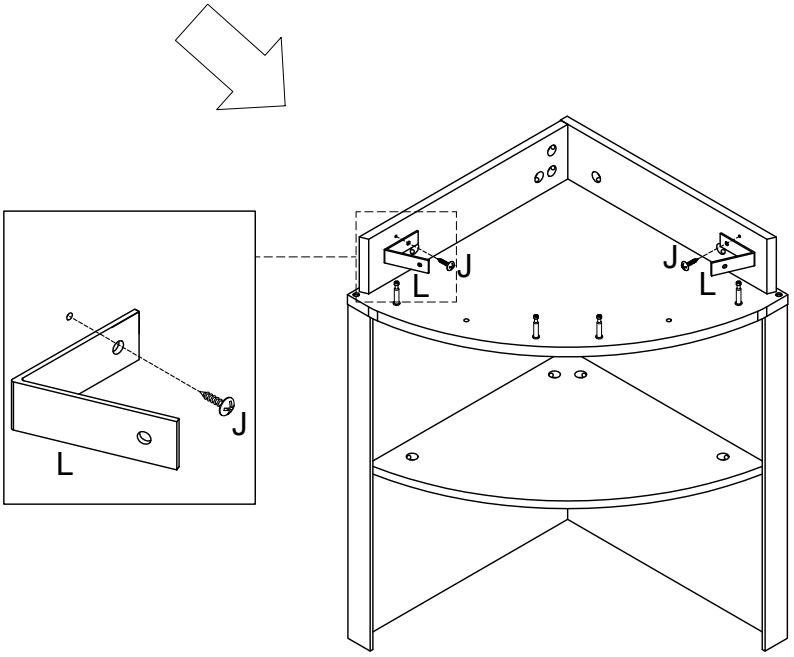

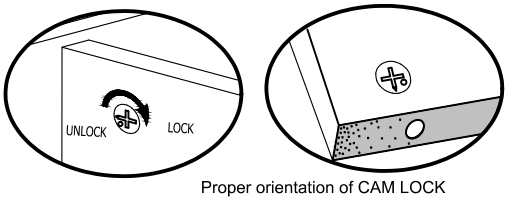

Proper orientation of CAM LOCK

STEP12

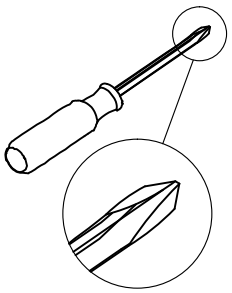

Ø15X10mm	Ø6X30mm	M4×12
B X4	C X2	J X2

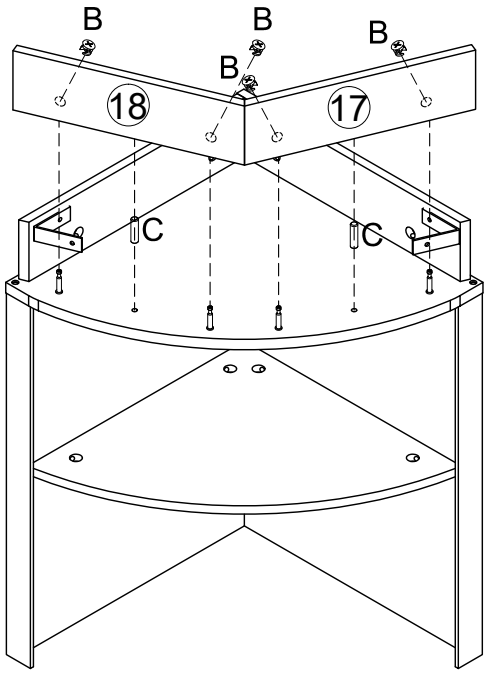

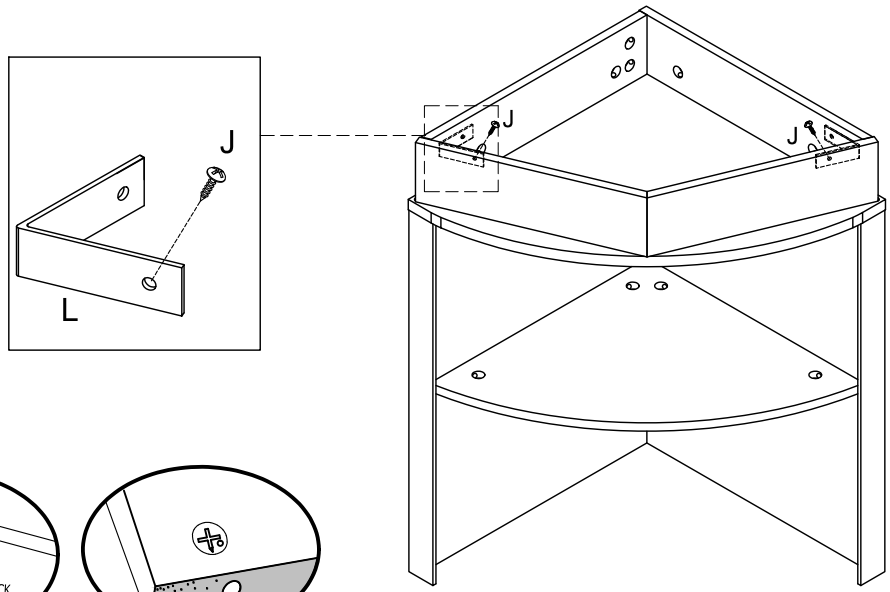

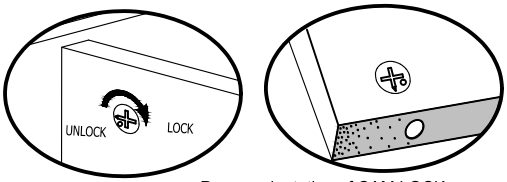

Proper orientation of CAM LOCK

STEP13

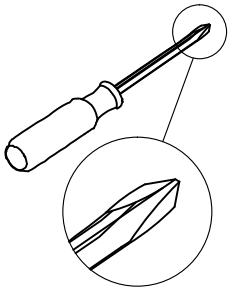

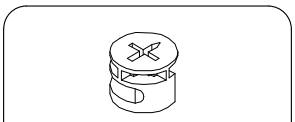

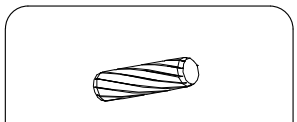

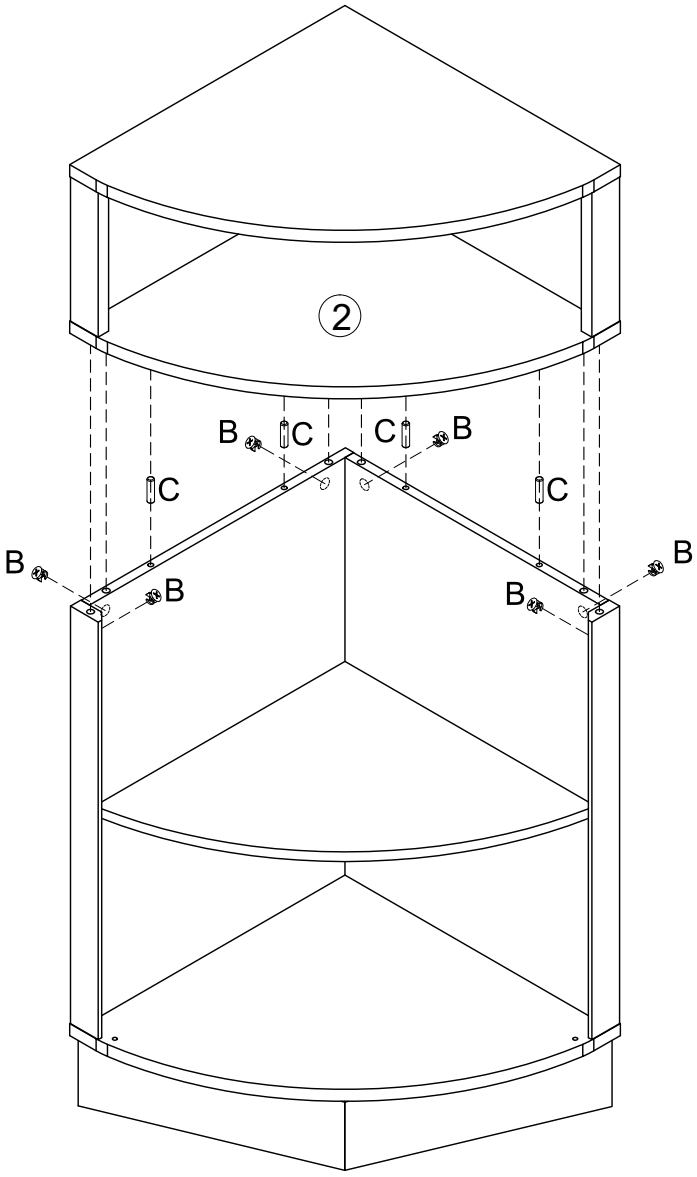

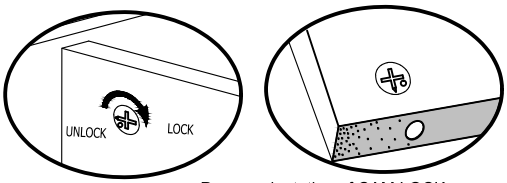

Proper orientation of CAM LOCK

STEP14

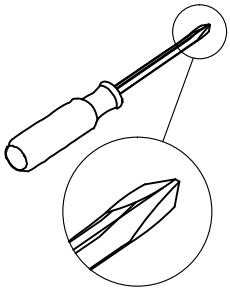

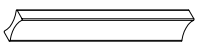	
E	X2

 M4×18	
F	X4

	
K	X4

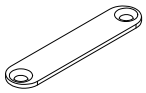	
N	X2

 Ø3X12mm	
K	X4

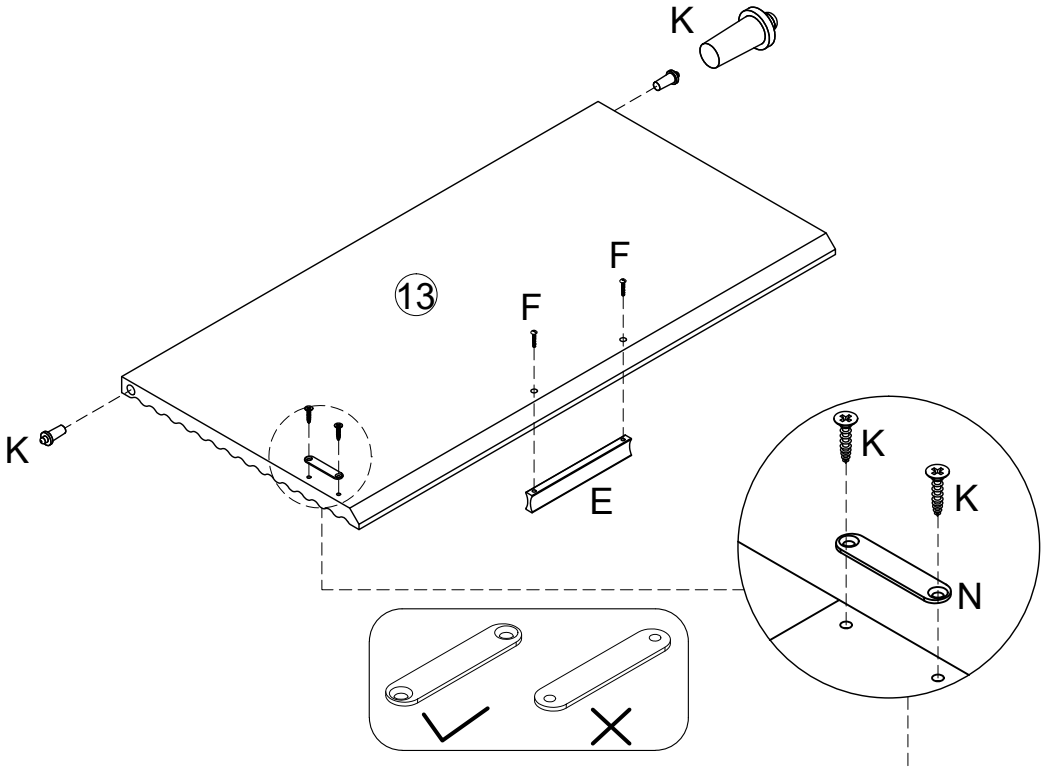

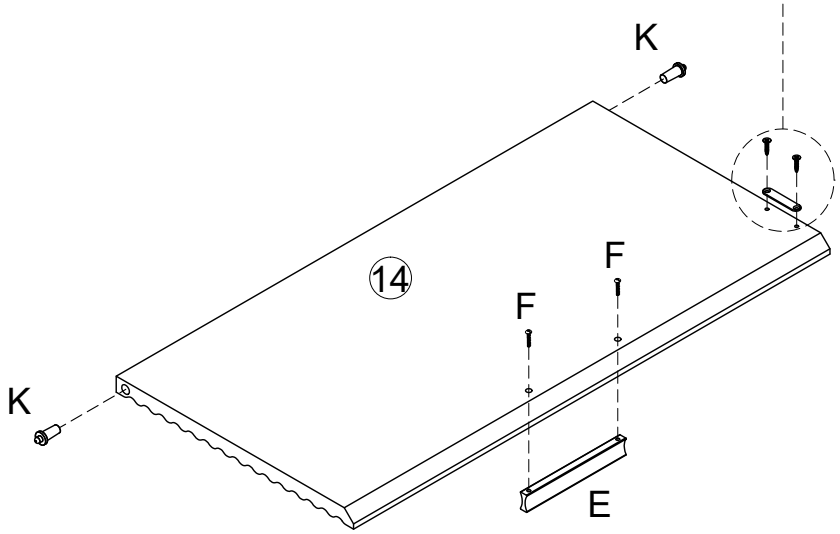

STEP15

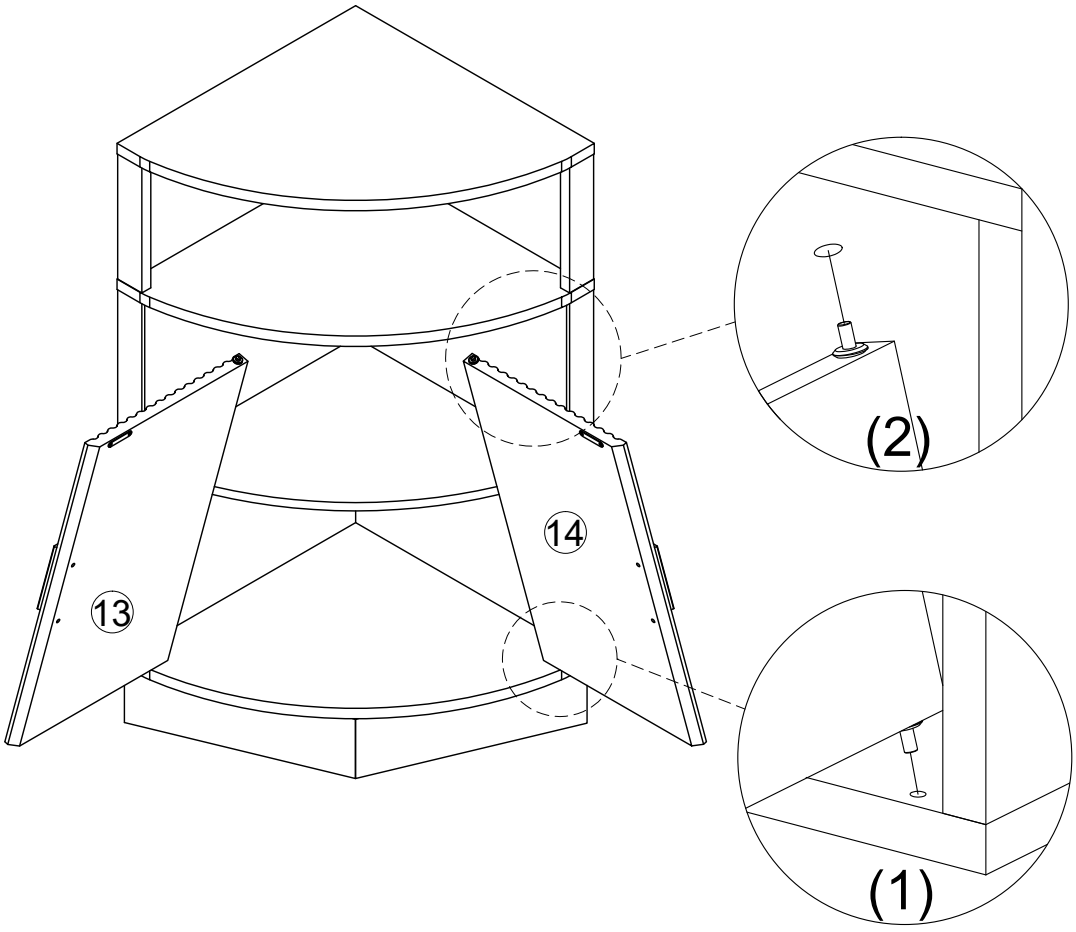

STEP16

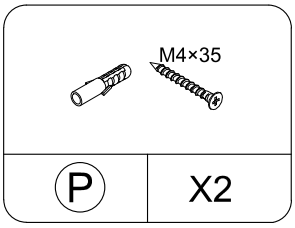

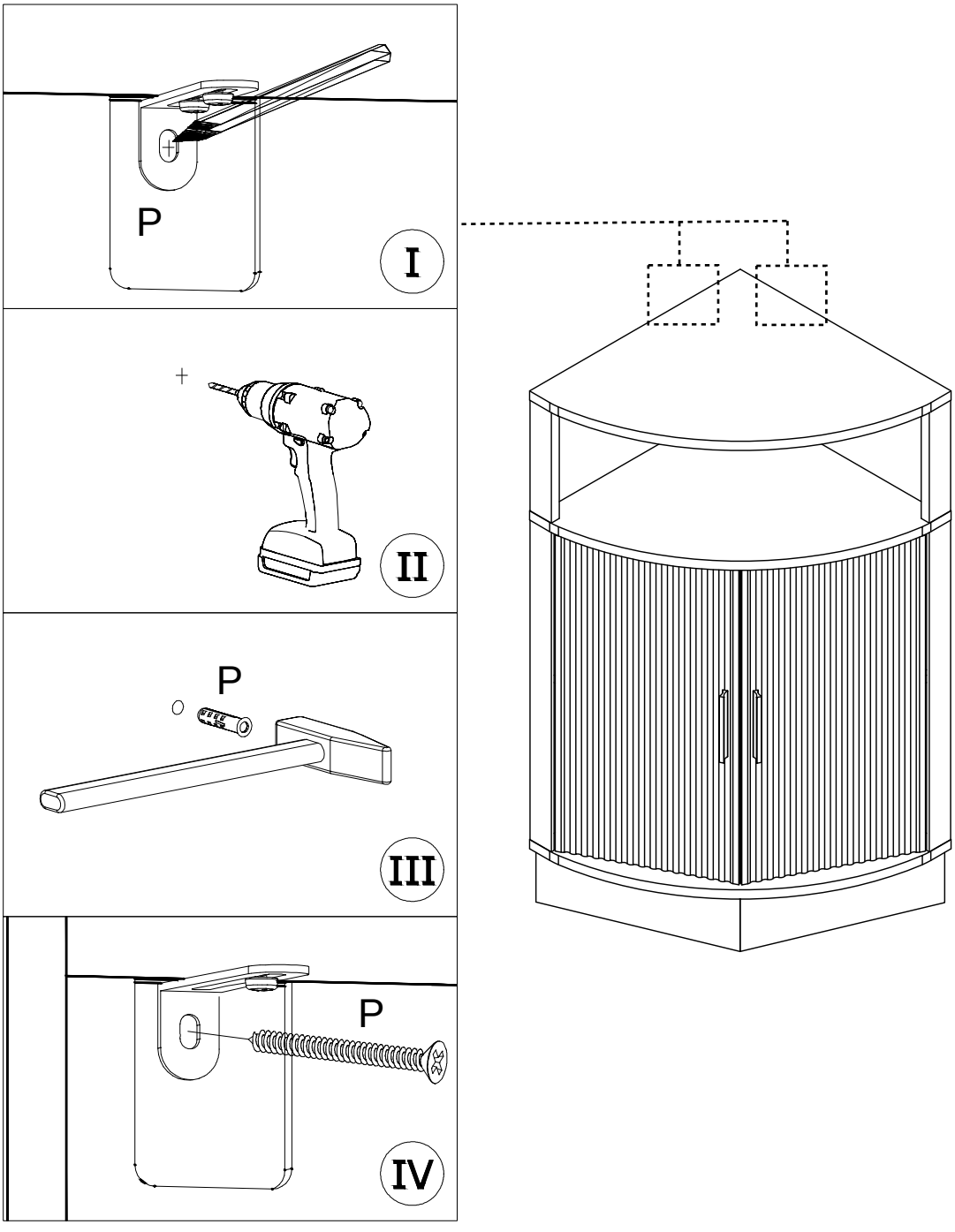

⚠ WARNING

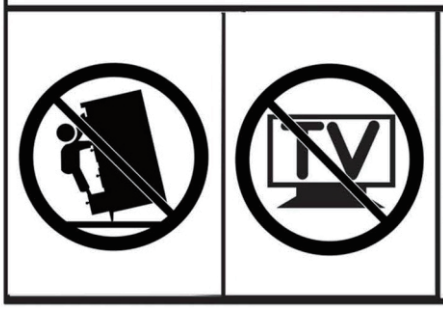

Children have died from furniture tipover. To reduce the risk of furniture tipover:
- •ALWAYS install tipover restraint provided.
- •NEVER put a TV on this product.
- •NEVER allow children to stand, climb or hang on drawers, doors, or shelves.
- •NEVER open more than one drawer at a time.
- •Place heaviest items in the lowest drawers.
- •Do not defeat or remove the drawer interlock system.

This is a permanent label.
Do not remove!

⚠ ATTENTION

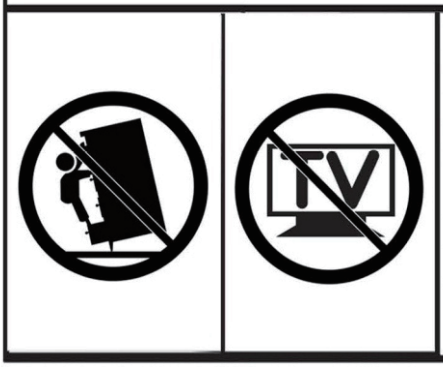

Des enfants sont morts du basculement des meubles. Pour réduire le risque de basculement des meubles:
- • TOUJOURS installer la retenue de basculement fournie.
- • NE JAMAIS mettre de téléviseur sur ce produit.
- • NE JAMAIS permettre aux enfants de se tenir debout, de grimper ou de s'accrocher à des tiroirs, des portes ou des étagères.
- • N'ouvrez JAMAIS plus d'un tiroir à la fois.
- • Placez les objets les plus lourds dans les tiroirs les plus bas.
- • Ne désactivez pas et ne retirez pas le système de verrouillage du tiroir.

Ceci est une étiquette permanente.
Ne pas enlever!

⚠ WARNUNG

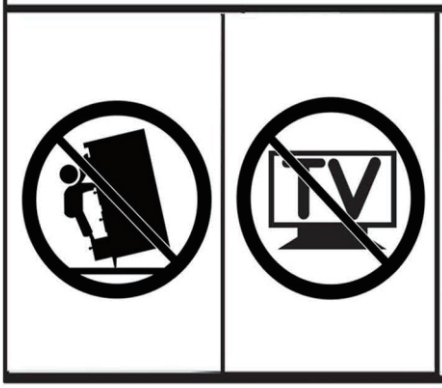

Kinder sind an einem Möbelkipp gestorben. So verringern Sie das Risiko eines Umkippens von Möbeln:
- • Installieren Sie IMMER die mitgelieferte Kipprückhaltevorrichtung.
- • Stellen Sie NIEMALS einen Fernseher an dieses Produkt.
- • Lassen Sie Kinder NIEMALS an Schubladen, Türen oder Regalen stehen klettern oder hängen.
- • Öffnen Sie NIEMALS mehr als eine Schublade gleichzeitig.
- • Legen Sie schwerste Gegenstände in die untersten Schubladen.
- • Besiegen oder entfernen Sie das Schubladenverriegelungssystem nicht.

Dies ist ein dauerhaftes Etikett.
Nicht entfernen!