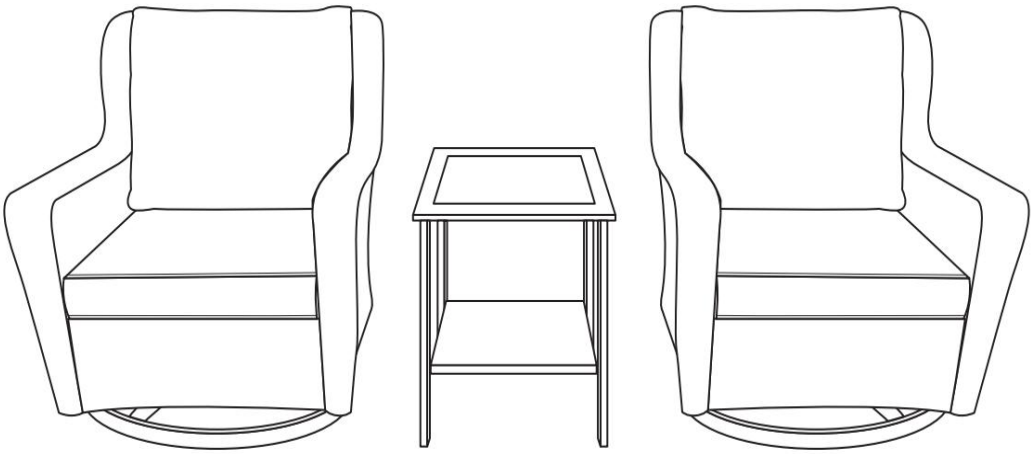

3PC Patio Chair Set

ASSEMBLY INSTRUCTIONS

IMPORTANT:

Please read all the instructions and warnings before assembling.

WARNING:

● All bolts shouldn't be tightened until the complete piece is assembled (This will make the assembly process much easier). Once the piece is fully assembled, then go back and tighten all bolts with provided tool.

● Keep all children and pets away from assembly area.

● Keep assembly area at least 6 feet from any obstruction such as a fence, garage, house, overhanging branches, laundry line or electrical wires.

● Some parts may contain sharp edges. When assembling and using this product, basic safety precautions should always be followed to reduce the risk of personal injury and damage to the product.

● The chair and table are not to be used for standing purposes and will not function as a stool or step-ladder. Use on even surfaces only.

● The chair and table are not a toy. Proper use of the chair is for single person seating only. Chair tested for use at weight of 350 lb. Improper use of the product or failure to use as directed may result in injury. Not intended for commercial use.

● **Warranty:** One year limited warranty. Proof of purchase (dated register receipt) is required for warranty claims. It remains the customer's responsibility for freight and packing charges to and from the service center.

CARE & MAINTENANCE

● STAIN RESISTANT CUSHIONS CARE —— KEEP THE CUSHIONS IN STORAGE ON RAINY DAYS.

● **SPILLS:** Immediately wipe up the spill using a white damp cloth. Repeat process if necessary until stain is gone. Allow cushion to air dry.

● **FABRIC CARE:** Hand wash cold, non-chlorine bleach when needed, lay flat to dry. Cool iron if necessary. Do not dry clean.

● ALL WEATHER WICKER PRODUCT CARE

When not in use, wipe free of any dirt or loose objects, wash with a mild solution of soap and water, rinse thoroughly and dry completely. Do not use strong detergent or abrasive cleaners. Bolts can loosen over a period of usage, please check the bolts occasionally and re-tighten if necessary.

ASSEMBLY INSTRUCTIONS FOR 1PC SWIVEL CHAIR

AL 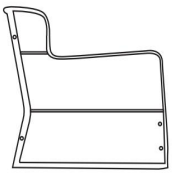 1PC Left Arm	AR 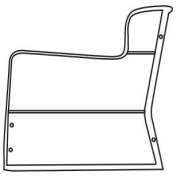 1PC Right Arm	B 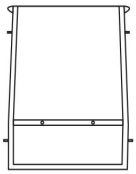 1PC Chair Back	C  1PC Front Panel	D 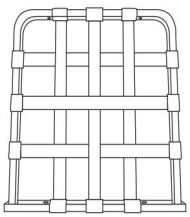 1PC Seat Panel
E 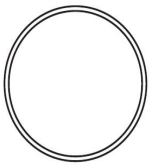 1PC Base	F  2PC Short Connecting Rod	G  1PC Long Connecting Rod	H 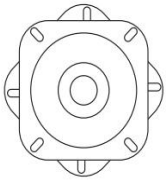 1PC Swivel Plate	I  M6*35mm 22PC Bolt
J 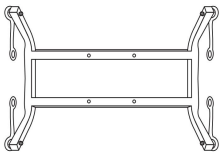 1PC U-Shaped Fitting	K  22PC Washer	L  1PC Allen Wrench	M  M6*40mm 4PC Bolt	N  M6*16mm 8PC Bolt
O  14PC M6 Nut	P  1PC Open End Wrench	Tool: 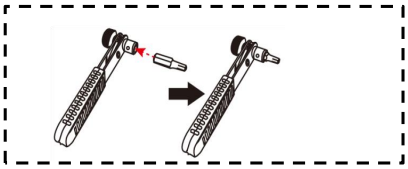		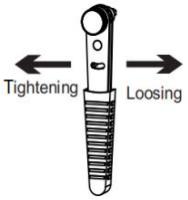 Ratchet Wrench

1. Keep the bolts loose.

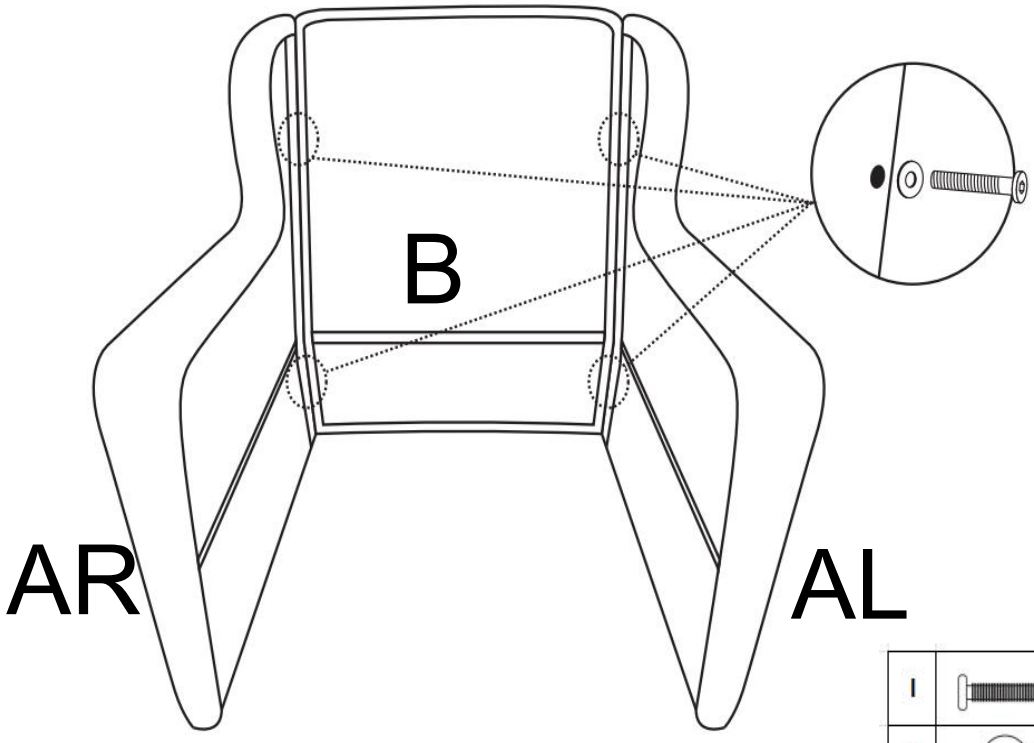

I		M6*35mm	4
K		Ø16*Ø6.5*1mm	4

2. Keep the bolts loose.

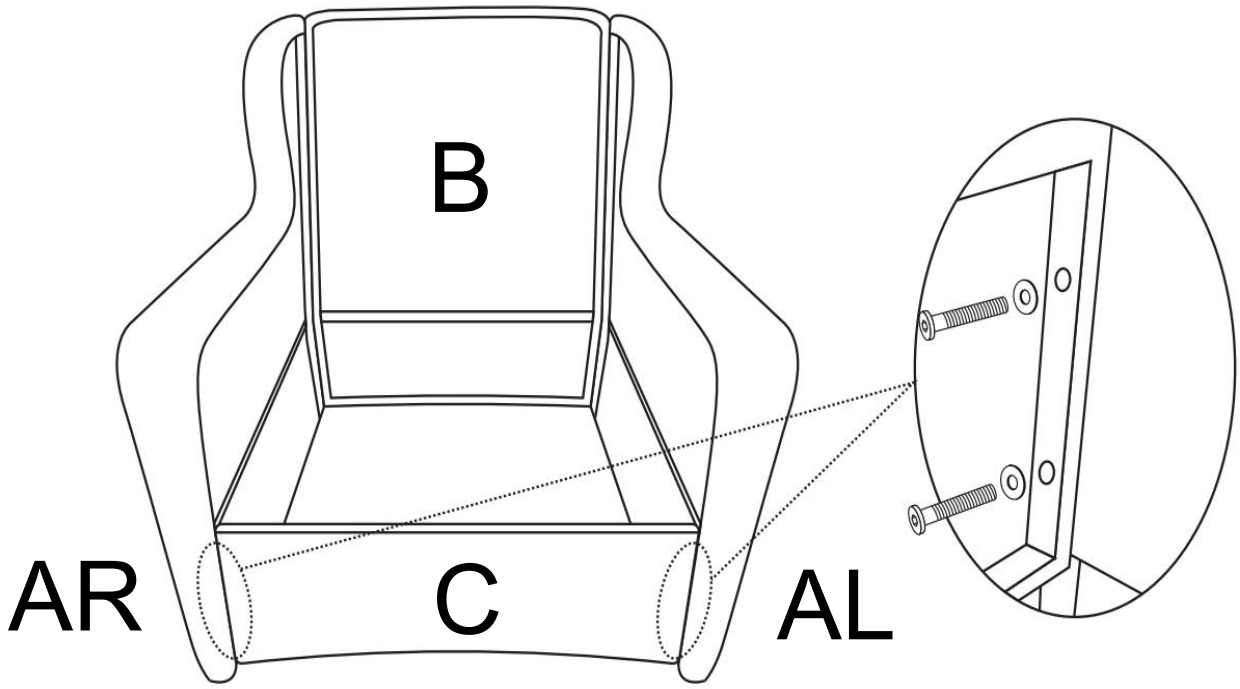

I		M6*35mm	4
K		Ø16*Ø6.5*1mm	4

3. Keep the bolts loose.

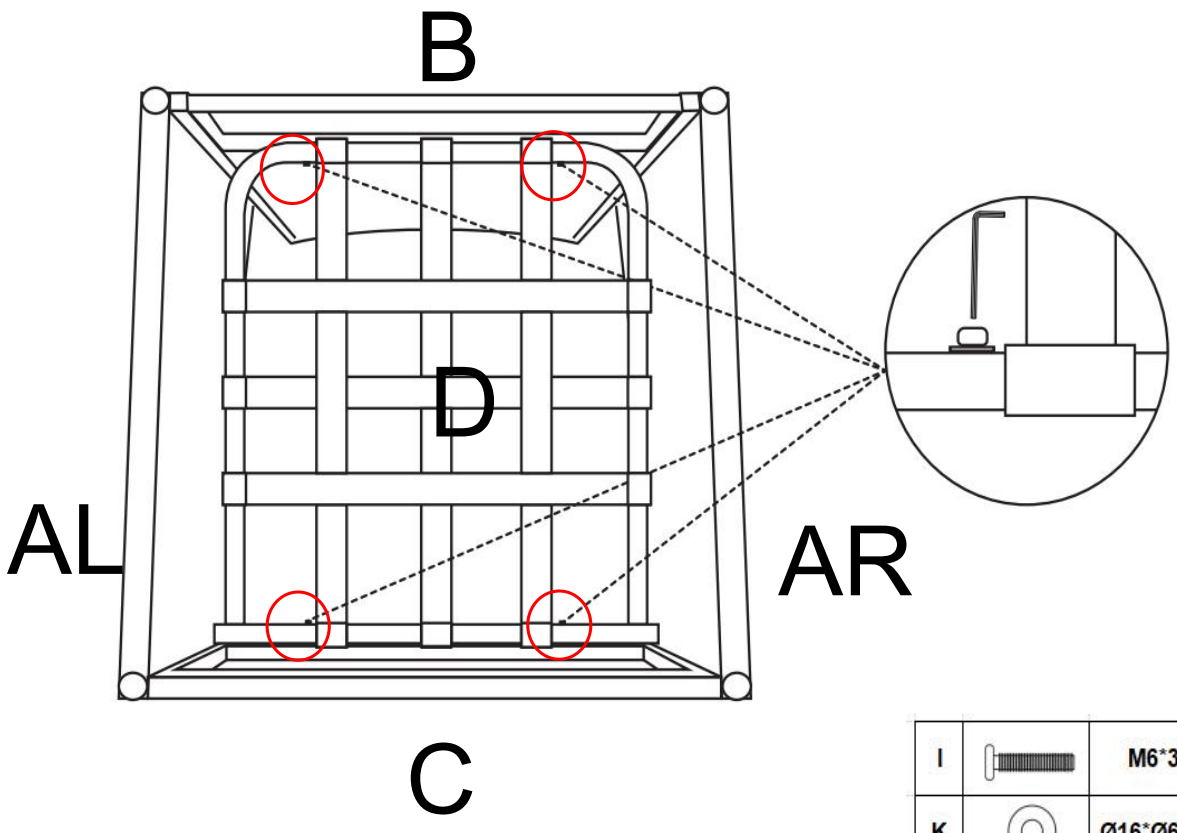

I		M6*35mm	4
K		Ø16*Ø6.5*1mm	4

4. Keep the bolts loose.

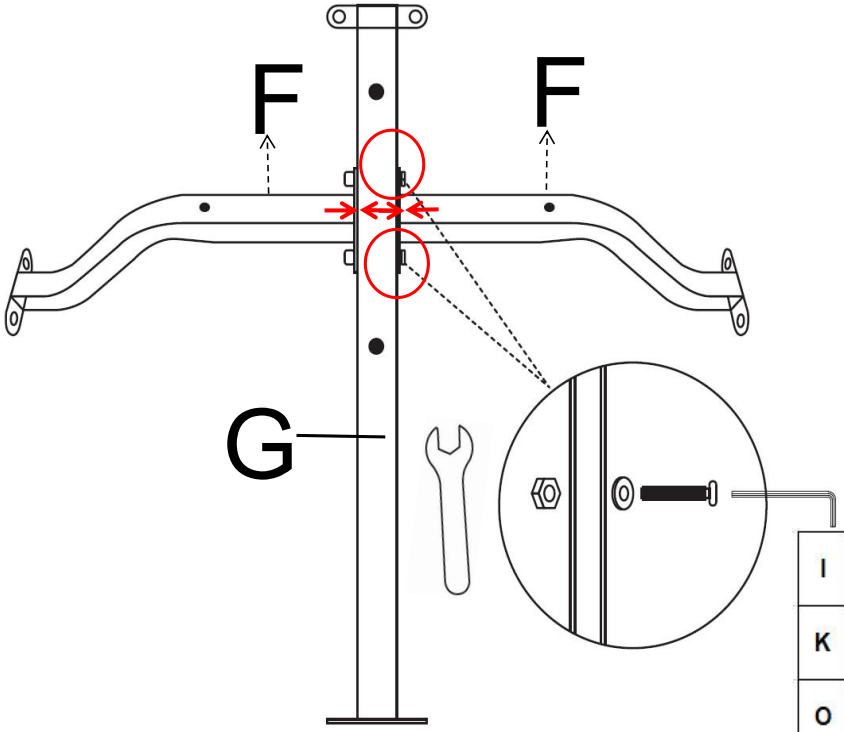

I		M6*35mm	2
K		Ø16*Ø6.5*1mm	2
O		M6	2

5. Keep the bolts loose.

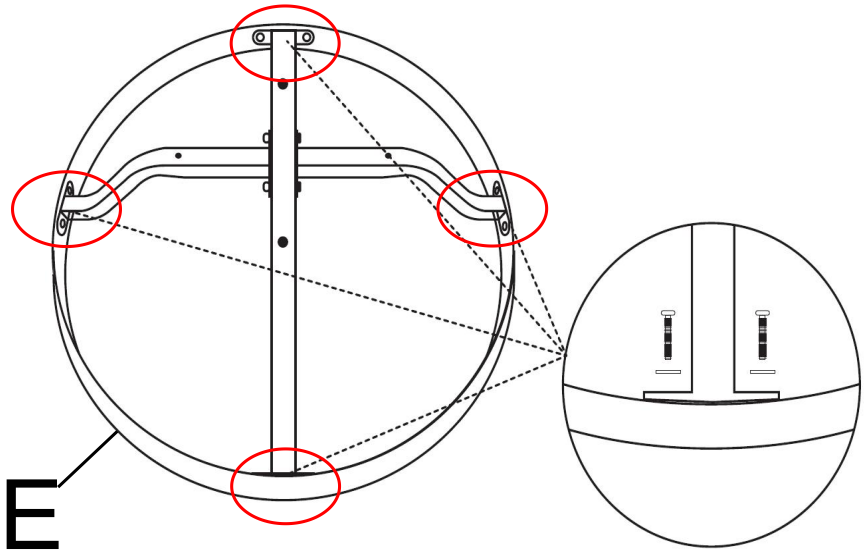

N		M6*16mm	8
K		Ø16*Ø6.5*1mm	8

6. Keep the bolts loose.

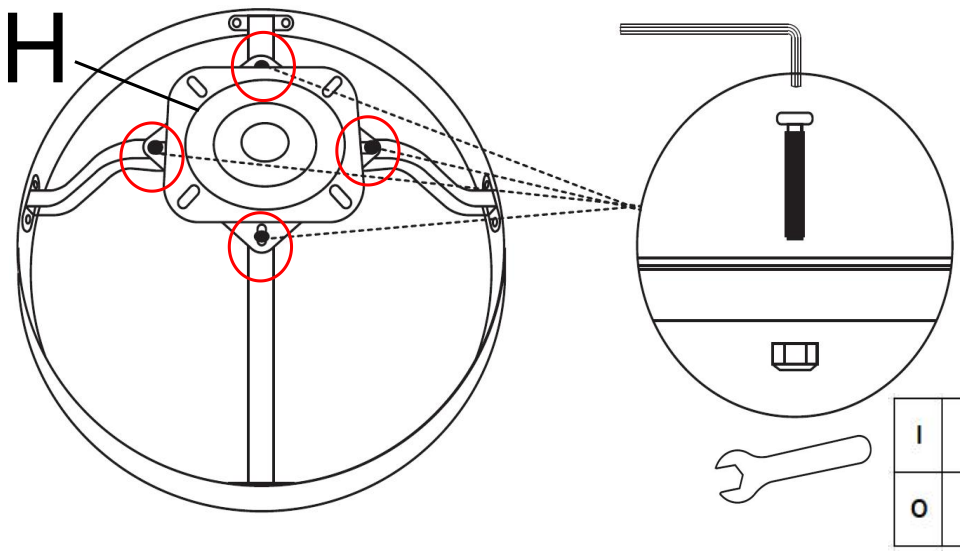

I		M6*35mm	4
O		M6	4

7. Keep the bolts loose.

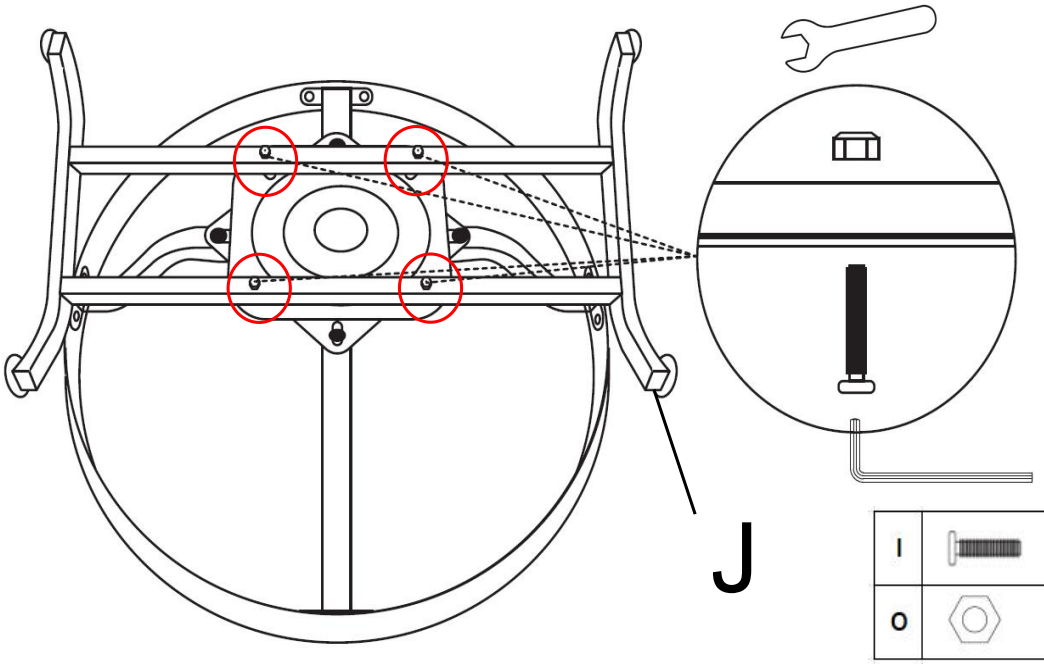

I		M6*35mm	4
O		M6	4

8. Keep the bolts loose.

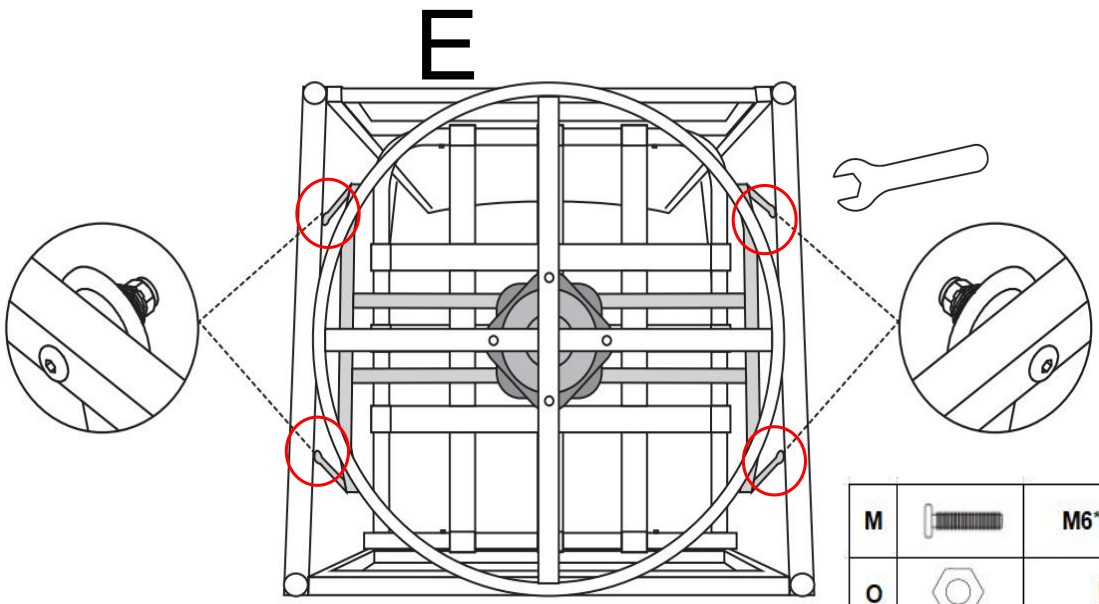

M		M6*40mm	4
O		M6	4

9. Tighten all bolts, put cushions onto the chair.

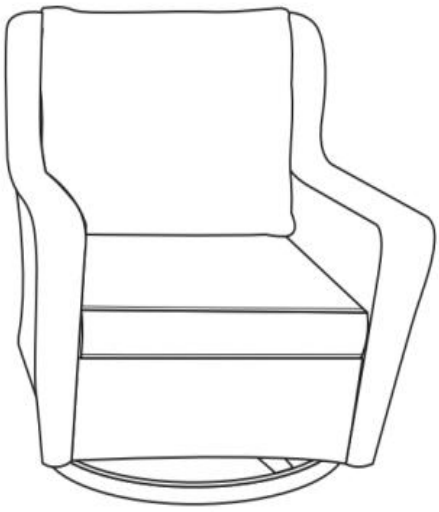

SPECIAL WARNING:

THIS CHAIR IS NOT A TOY. DON'T OVER-SWING THE CHAIR. OVER-SWING THE CHAIR MAYBE MAKE THE CHAIR TIP OVER AND RESULT IN INJURY.



DO NOT STAND ON THE CHAIR. ANY IMPROPER USE OF THIS PRODUCT MAY RESULT IN INJURY.



ASSEMBLY INSTRUCTIONS

A	B	C	N	K	L
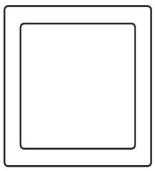	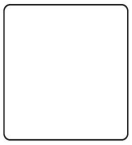	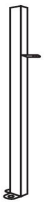	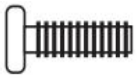 M6*16mm		
1PC Table Top	1PC Table Tray	4PC Table Leg	12PC Bolt	12PC Washer	1PC Allen Wrench

1. Keep the bolts loose.

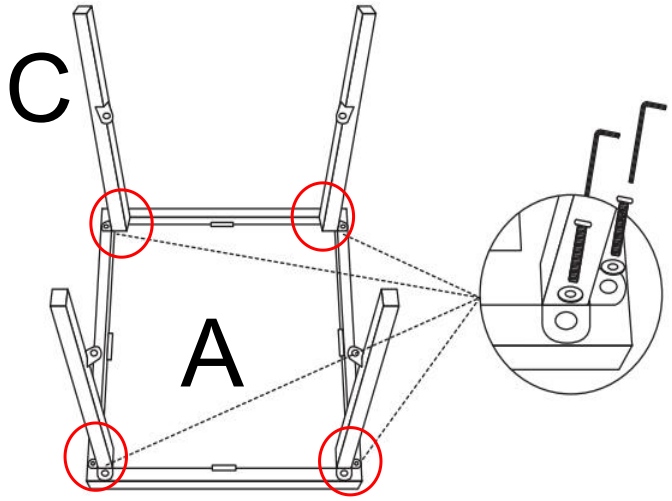

N		M6*16mm	8
K		Ø16*Ø6.5*1mm	8

2. Keep the bolts loose.

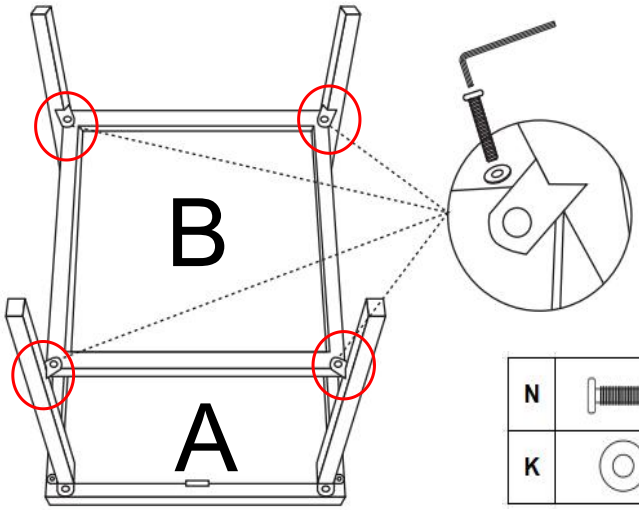

N		M6*16mm	4
K		Ø16*Ø6.5*1mm	4

3. Tighten all bolts, finished!

