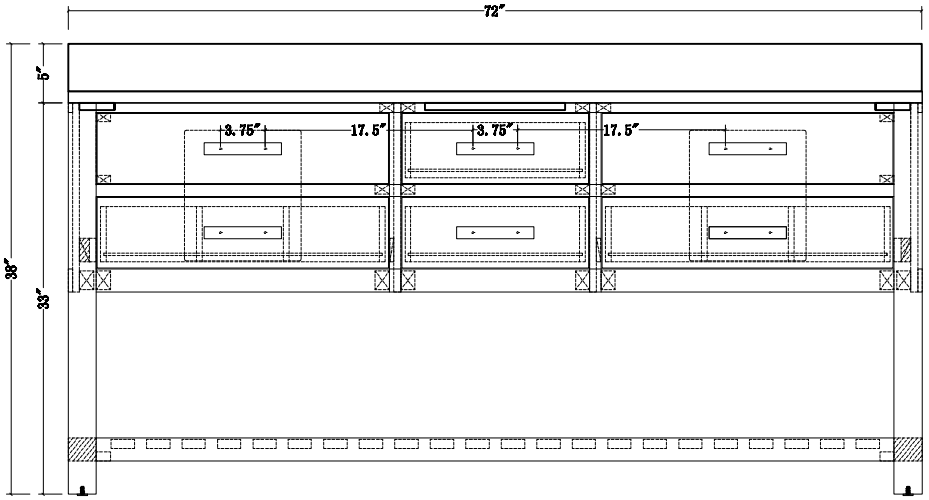
72"
5"
38"
33"
3.75"
17.5"
3.75"
17.5"

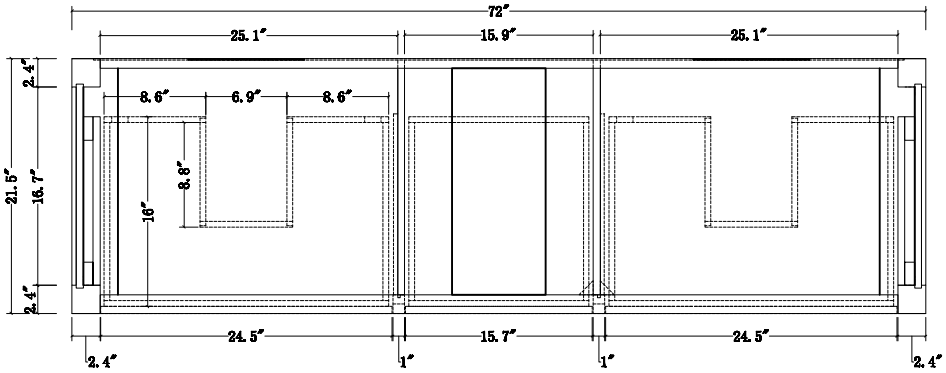
72"
25.1"
15.9"
25.1"
2.4"
21.5"
16.7"
2.4"
8.6"
6.9"
8.6"
8.8"
16"
24.5"
15.7"
24.5"
2.4"
1"
1"
2.4"

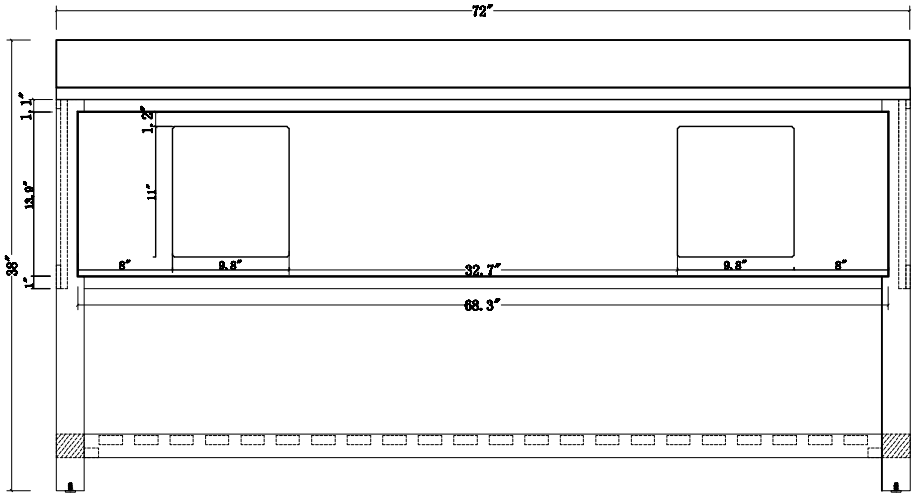
72"
1.1"
13.9"
1"
38"
1.2"
11"
8"
9.8"
32.7"
9.8"
8"
68.3"

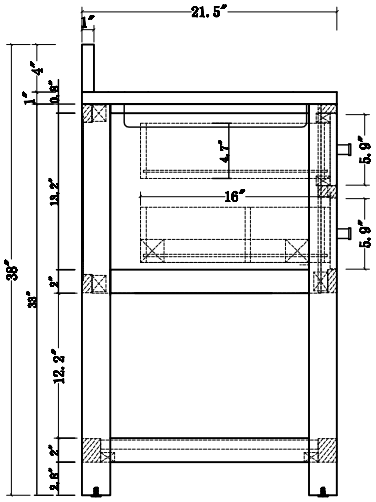
21.5"
1"
1"
4"
0.8"
38"
33"
13.2"
8"
12.2"
2.8"
8"
4.7"
16"
5.9"
5.9"

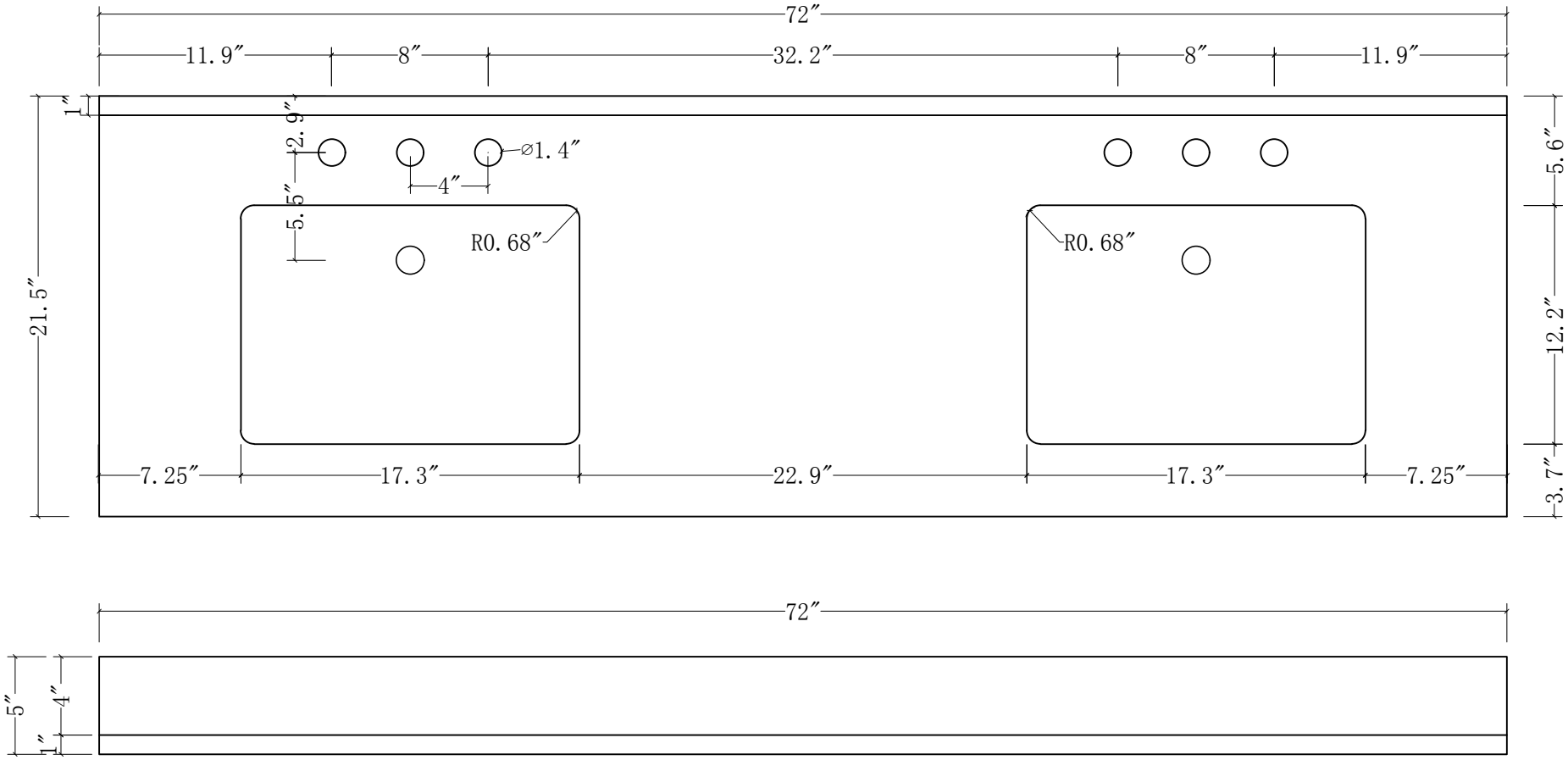
72″
11.9″
8″
32.2″
8″
11.9″
1″
2.9″
⌀1.4″
4″
5.5″
R0.68″
R0.68″
21.5″
5.6″
12.2″
3.7″
7.25″
17.3″
22.9″
17.3″
7.25″
72″
5″
4″
1″

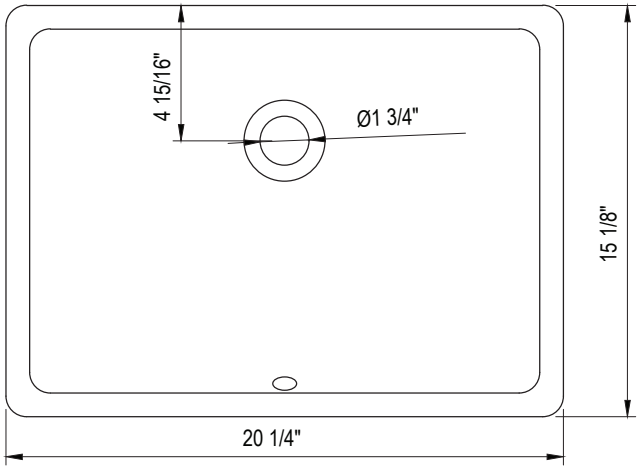
4 15/16"
Ø1 3/4"
15 1/8"
20 1/4"

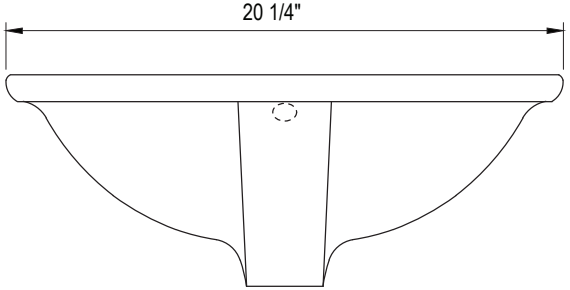
20 1/4"

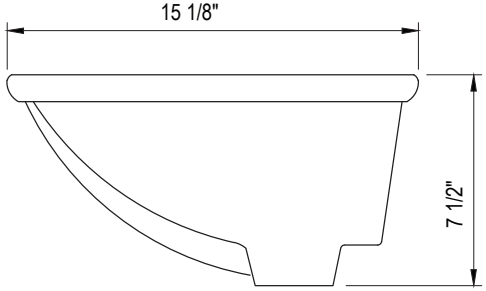
15 1/8"
7 1/2"

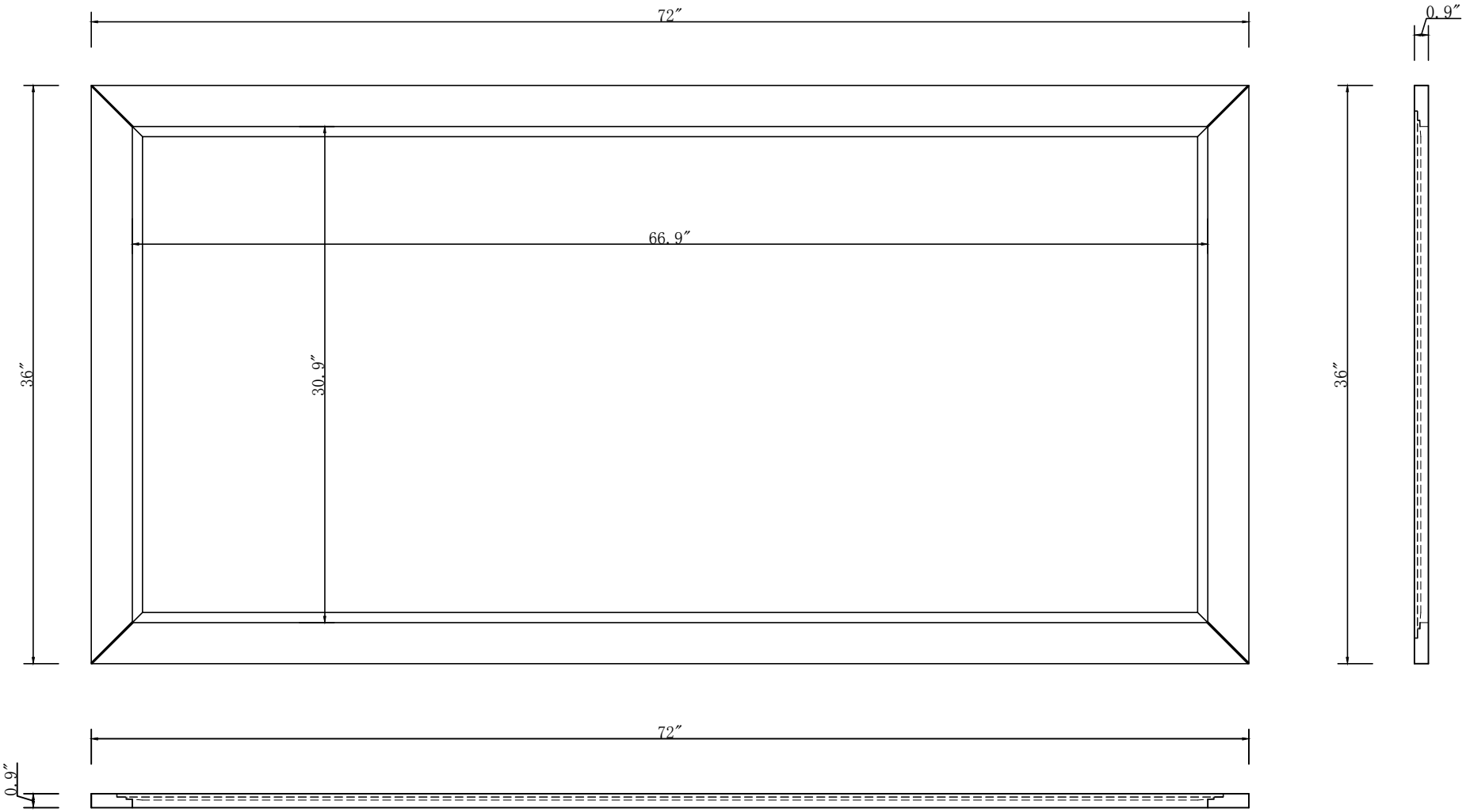
72″
0.9″
36″
66.9″
30.9″
36″
72″
0.9″

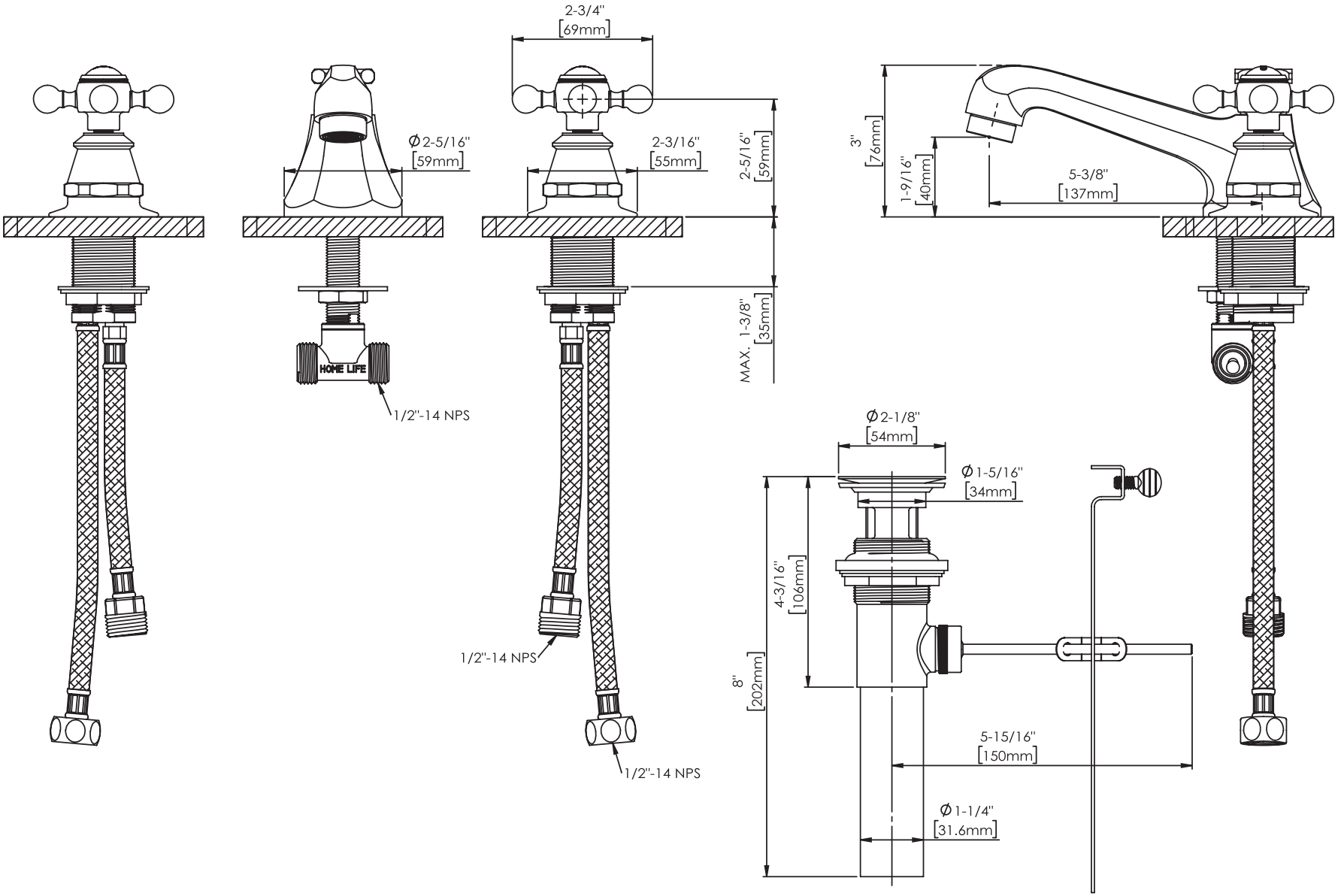
2-3/4"
[69mm]
Ø2-5/16"
[59mm]
2-3/16"
[55mm]
2-5/16"
[59mm]
MAX. 1-3/8"
[35mm]
HOME LIFE
1/2"-14 NPS
1/2"-14 NPS
1/2"-14 NPS
3"
[76mm]
1-9/16"
[40mm]
5-3/8"
[137mm]
Ø2-1/8"
[54mm]
Ø1-5/16"
[34mm]
4-3/16"
[106mm]
8"
[202mm]
5-15/16"
[150mm]
Ø1-1/4"
[31.6mm]