Accessories list

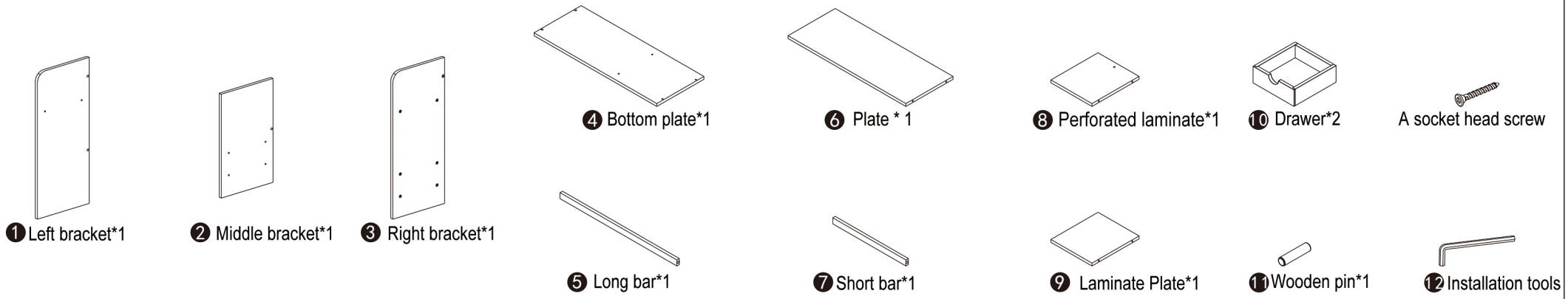

Installation diagram

1

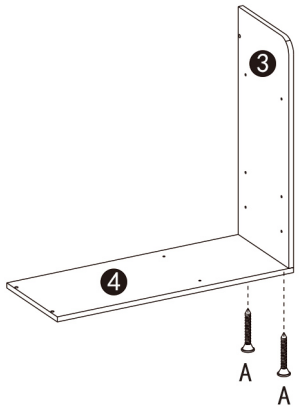

1.Install the right bracket 3 on the bottom plate 4 with the screw A

2

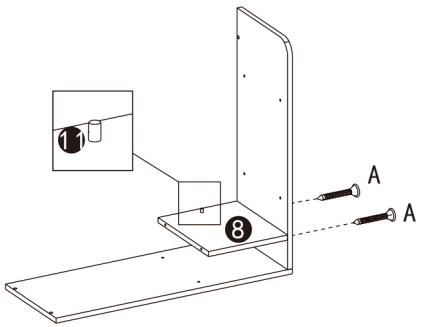

2.Fix the wood pin 11 on the perforated laminate 8, and then screw A to fix the laminate 8 to the right bracket 3

3

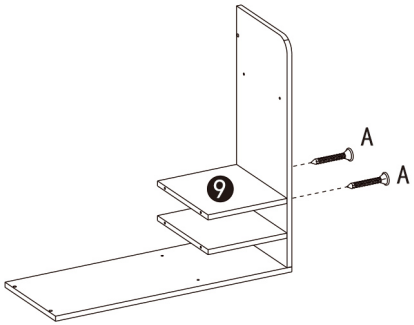

3.Position laminate 9 on right bracket 3 with screw A

4

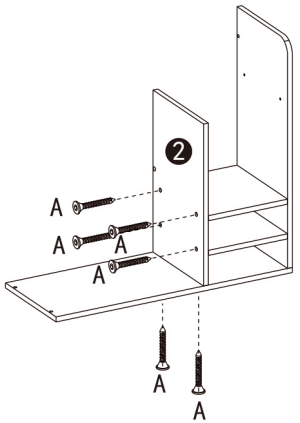

4.Install the middle bracket with screws A

5

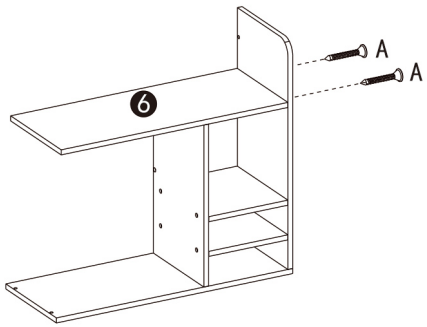

5.Install panel 6 with screws A

6

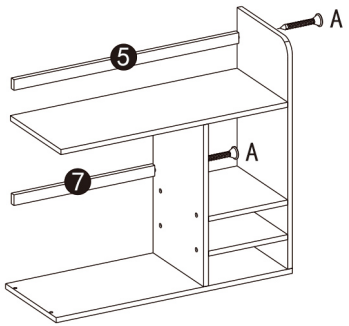

6.Install long shift 5 and short shift 7 with screws A

7

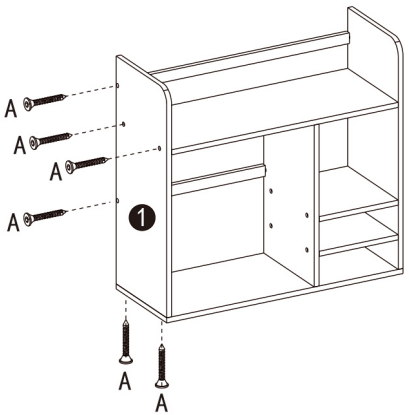

7.Install the left bracket 1 with the screw A

8

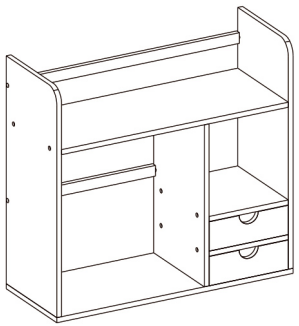

8.Put it in the drawer and install it