ASSEMBLY DIAGRAM

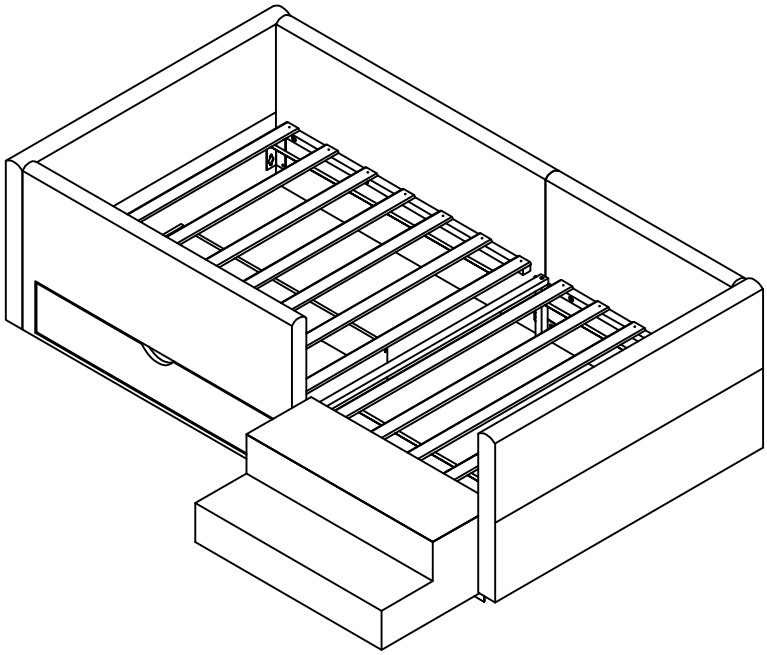

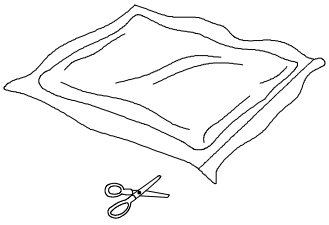

Carefully open the compression bag.

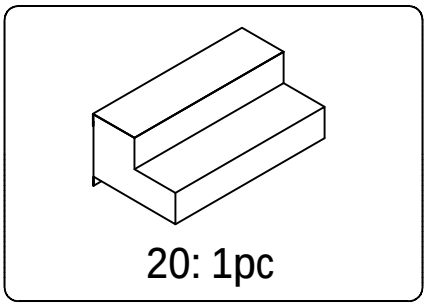

TIPS:

Wait patiently for the rebound; This is the key! It takes 12-24 hours (or more) for the upholstery to fully regain its full shape and comfort.

During or after recovery, gently pat and knead the surface and edges of the backpack to help evenly distribute the inner padding and eliminate transport indentations. If there are folds, try gently stretching the fabric in different directions to flatten it.

Parts List

1 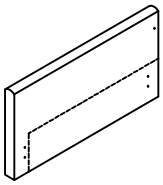 1PC	2 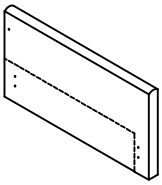 1PC	3 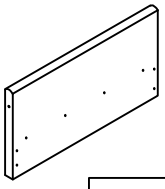 1PC	4 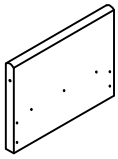 1PC
5 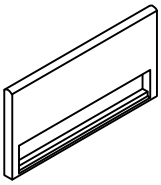 1PC	6 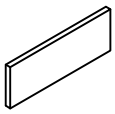 1PC	7 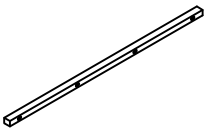 2PCS	8 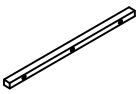 2PCS
9 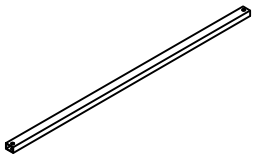 1PC	10  2PCS	11 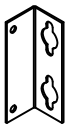 4PCS	12  1PC
13 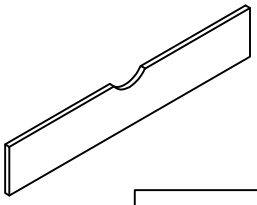 1PC	14 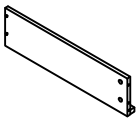 1PC	15 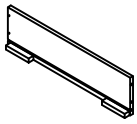 1PC	16 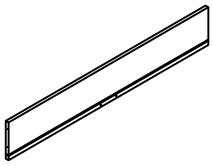 1PC
17 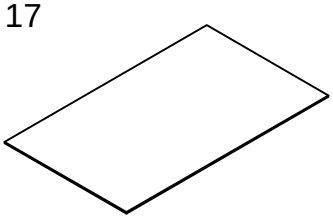 1PC	18 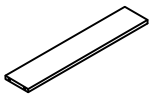 1PC	19 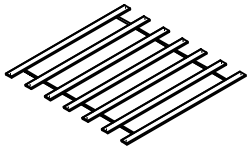 1PC	20 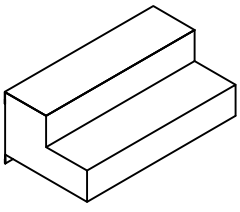 1PC
21 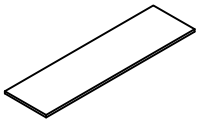 2PCS	22 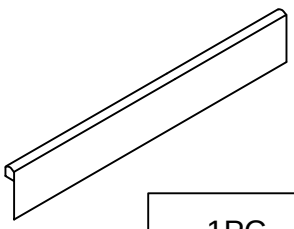 1PC	23  2PCS	24 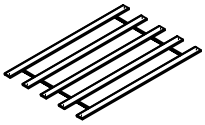 1PC

Hardware List

A  M8*30mm 26PCS	B  M8*60mm 2PCS	C  M6*20mm 2PCS	D  M6*45mm 14PCS
E  M8 1PC	F  M8*19mm 29PCS	G  M8 28PCS	H  M8 1PC
I  M8 1PC	J  M6*16mm 16PCS	K  M6 1PC	L 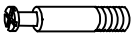 6PCS
M  6PCS	N  8*30mm 30PCS	O  8*15mm 8PCS	P  1PC

STEP :Packing Details

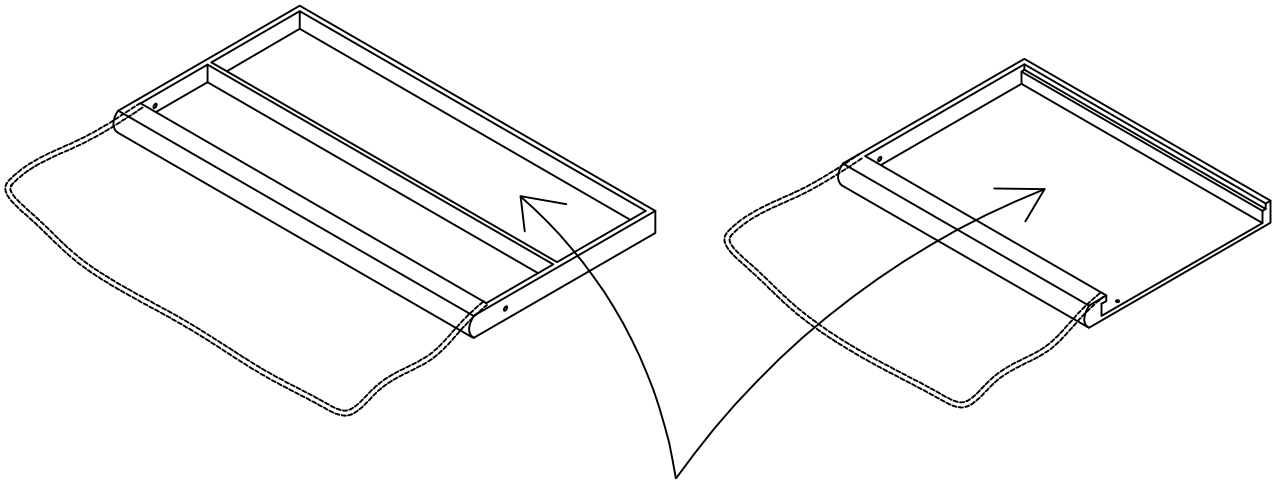

Components inside

STEP 1

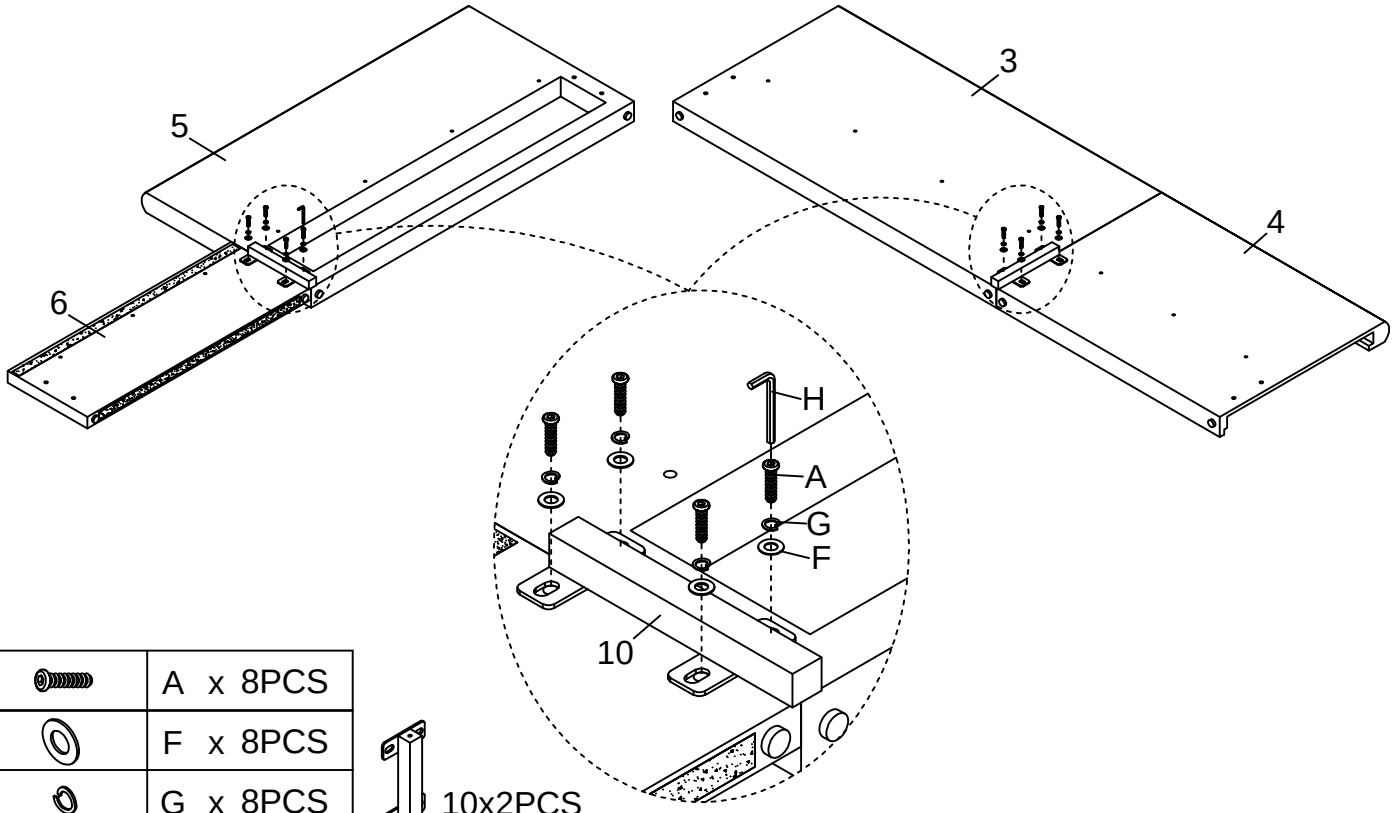

	A x 8PCS
	F x 8PCS
	G x 8PCS
	H x 1PC

10x2PCS

STEP 2

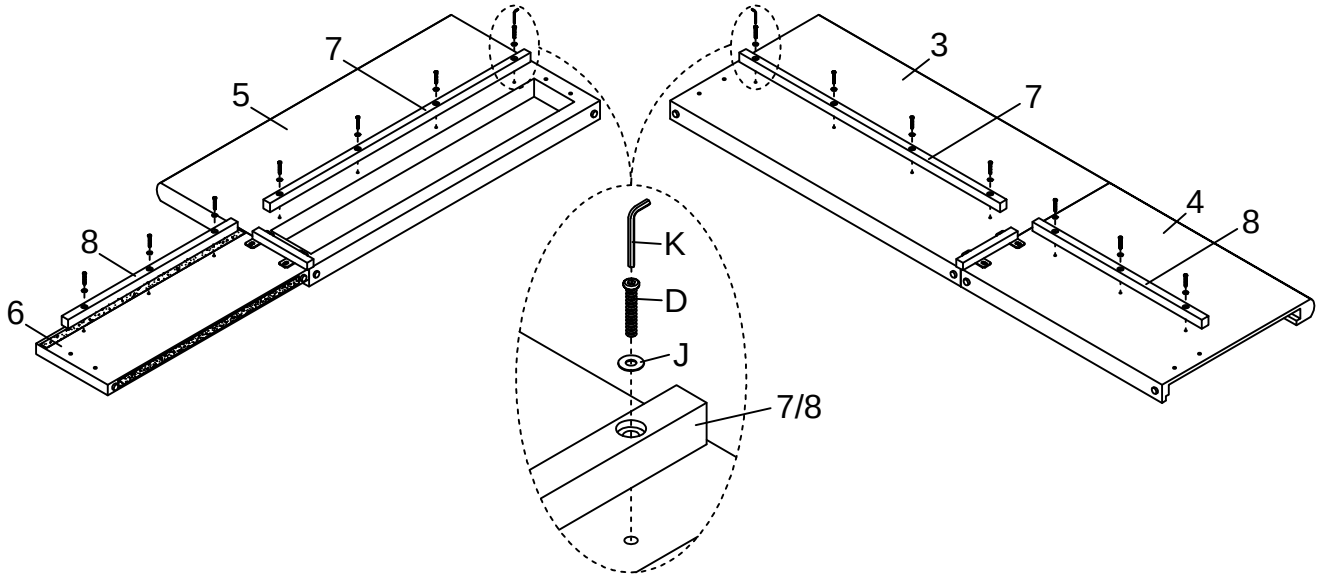

	D x 14PCS
	J x 14PCS
	K x 1PC

STEP 3

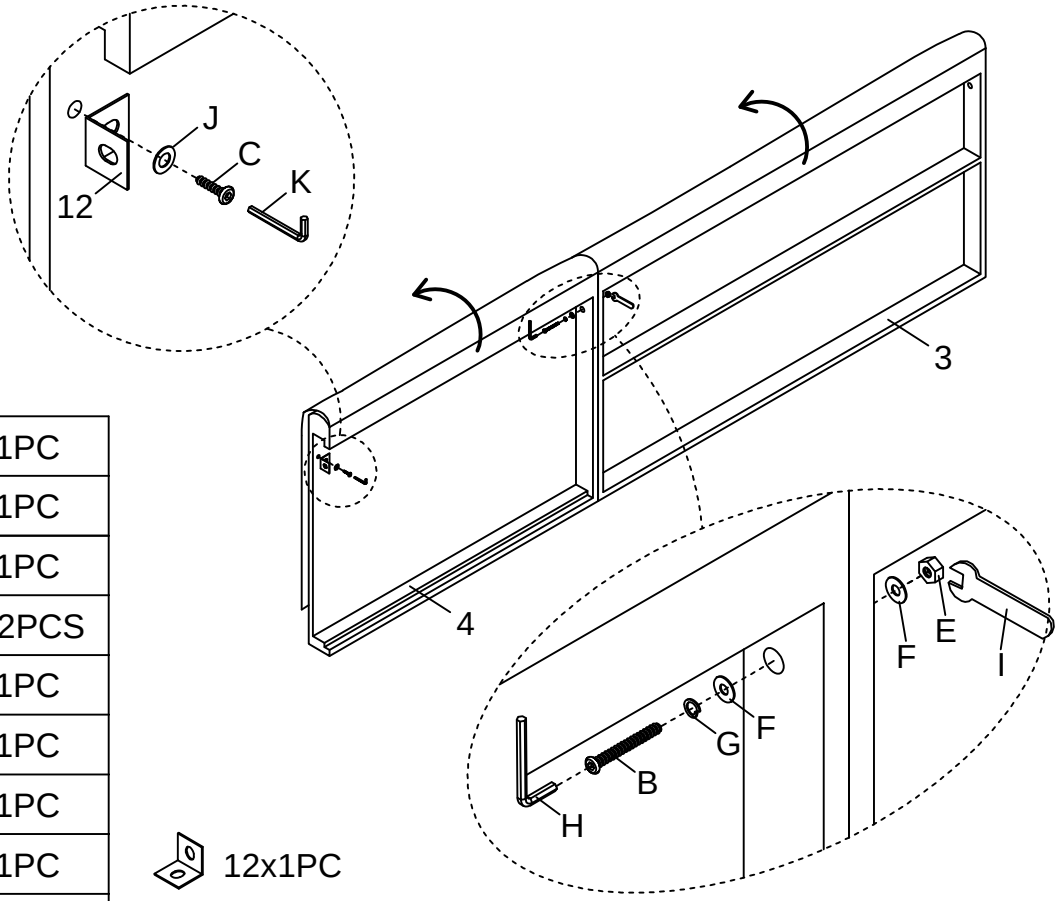

	B x 1PC
	C x 1PC
	E x 1PC
	F x 2PCS
	G x 1PC
	H x 1PC
	I x 1PC
	J x 1PC
	K x 1PC

12x1PC

STEP 4

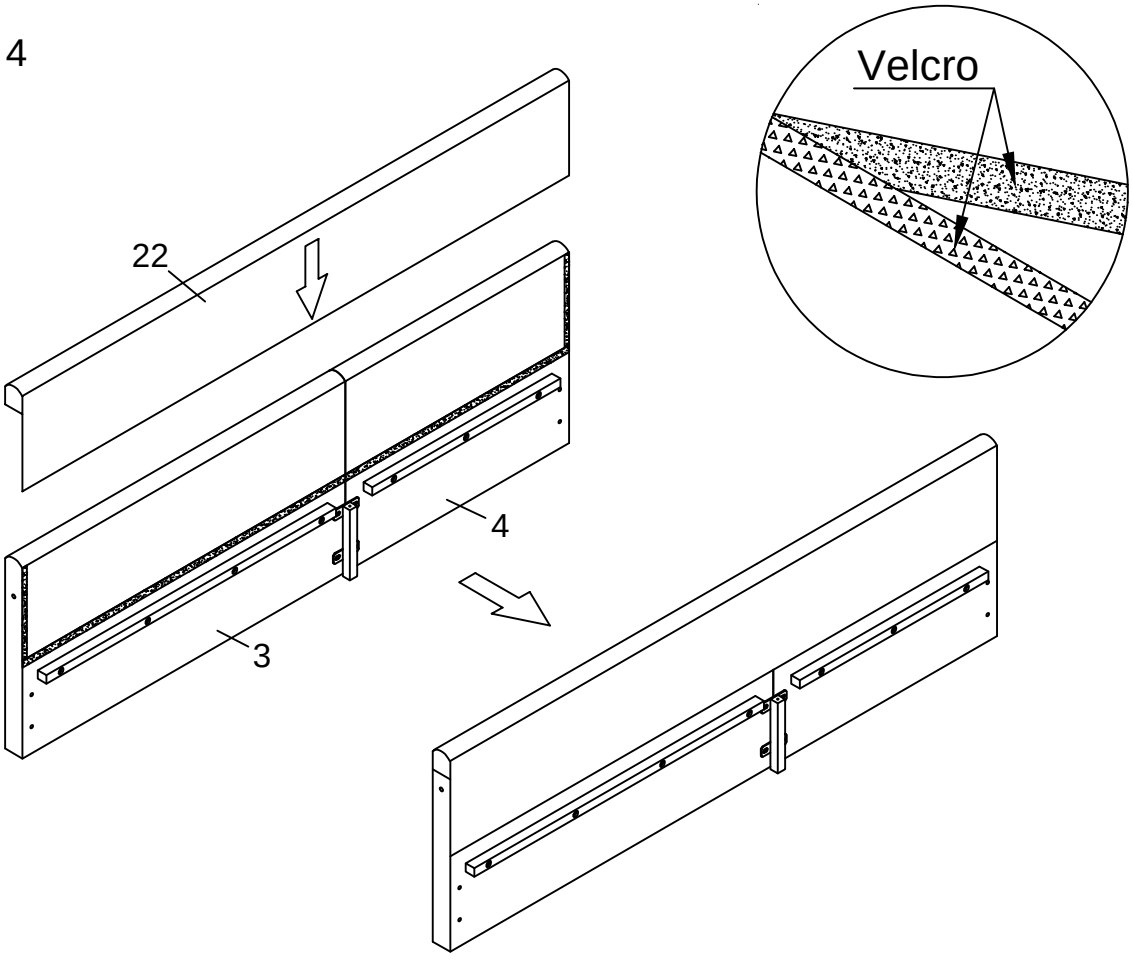

STEP 5

ASSEMBLY TOOLS REQUIRED (NOT INCLUDED)

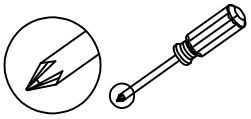

Screwdriver

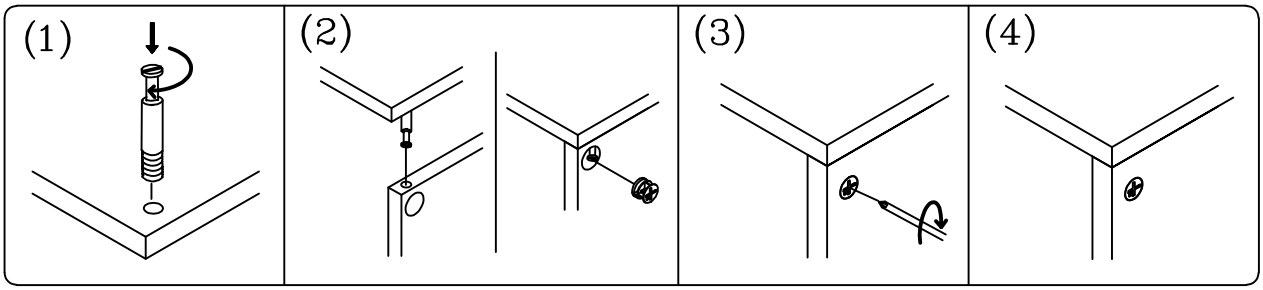

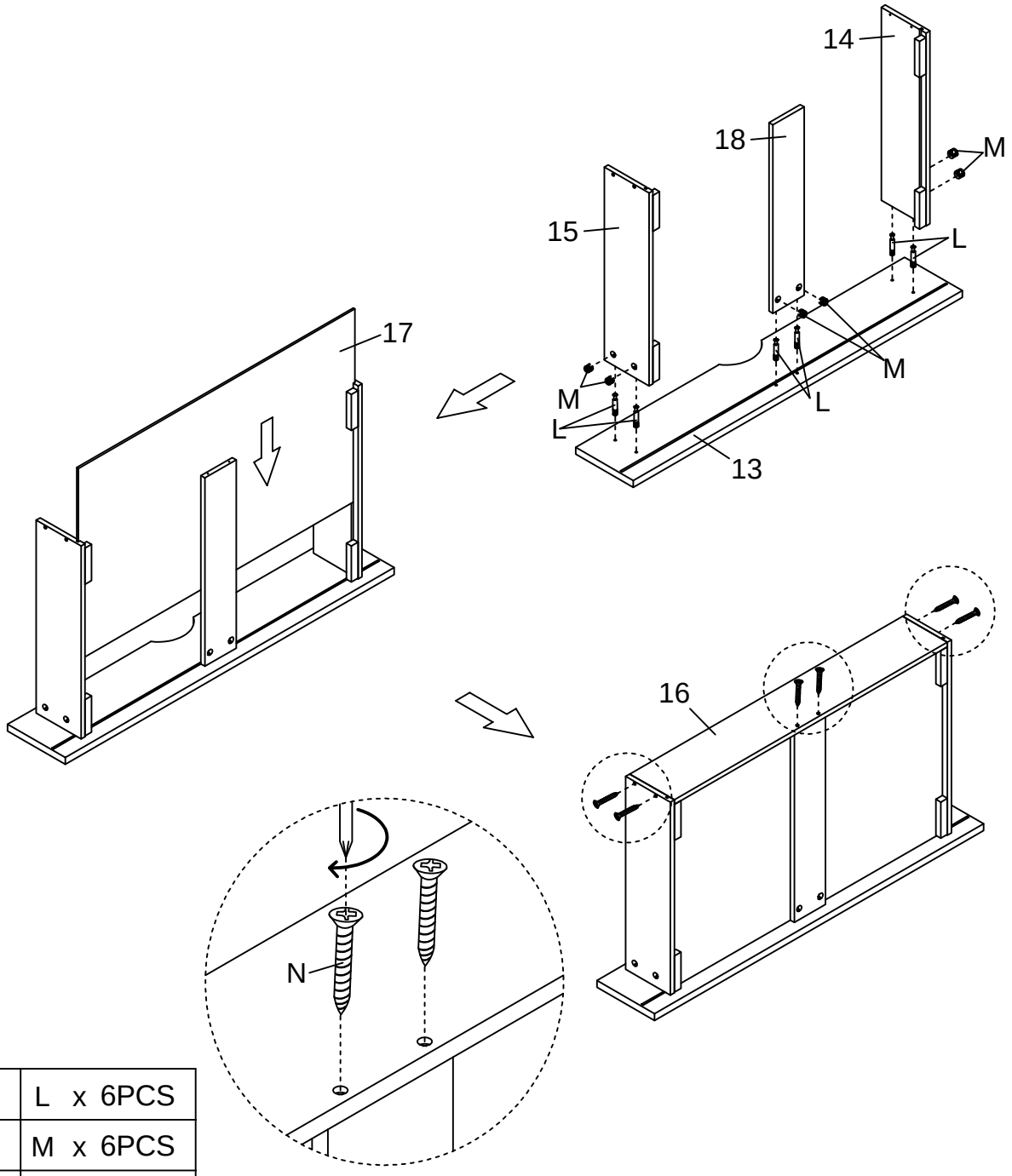

	L x 6PCS
	M x 6PCS
	N x 6PCS
	P x 1PC

STEP 6

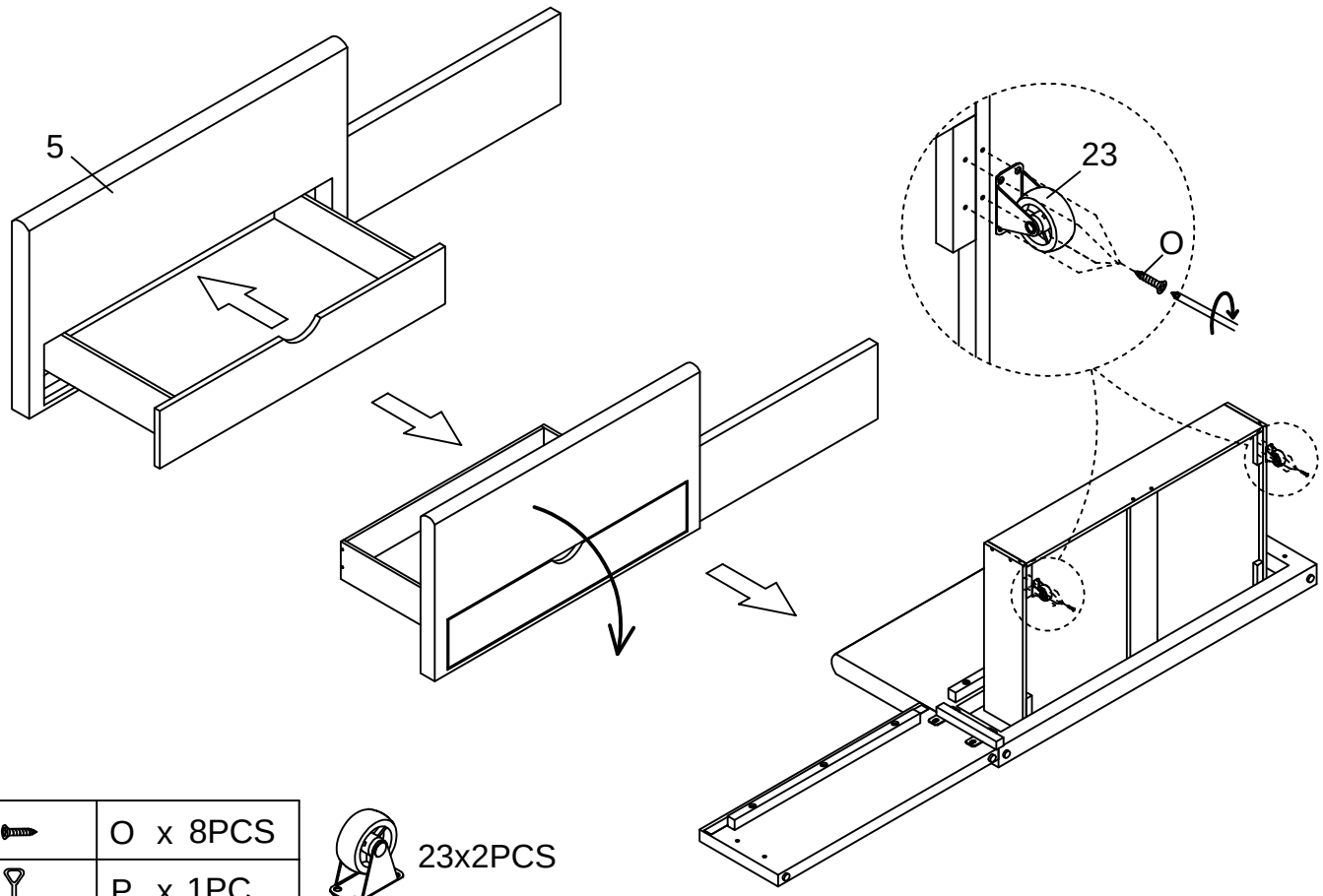

	O x 8PCS
	P x 1PC

23x2PCS

STEP 7

insert the part 21 to provide the support

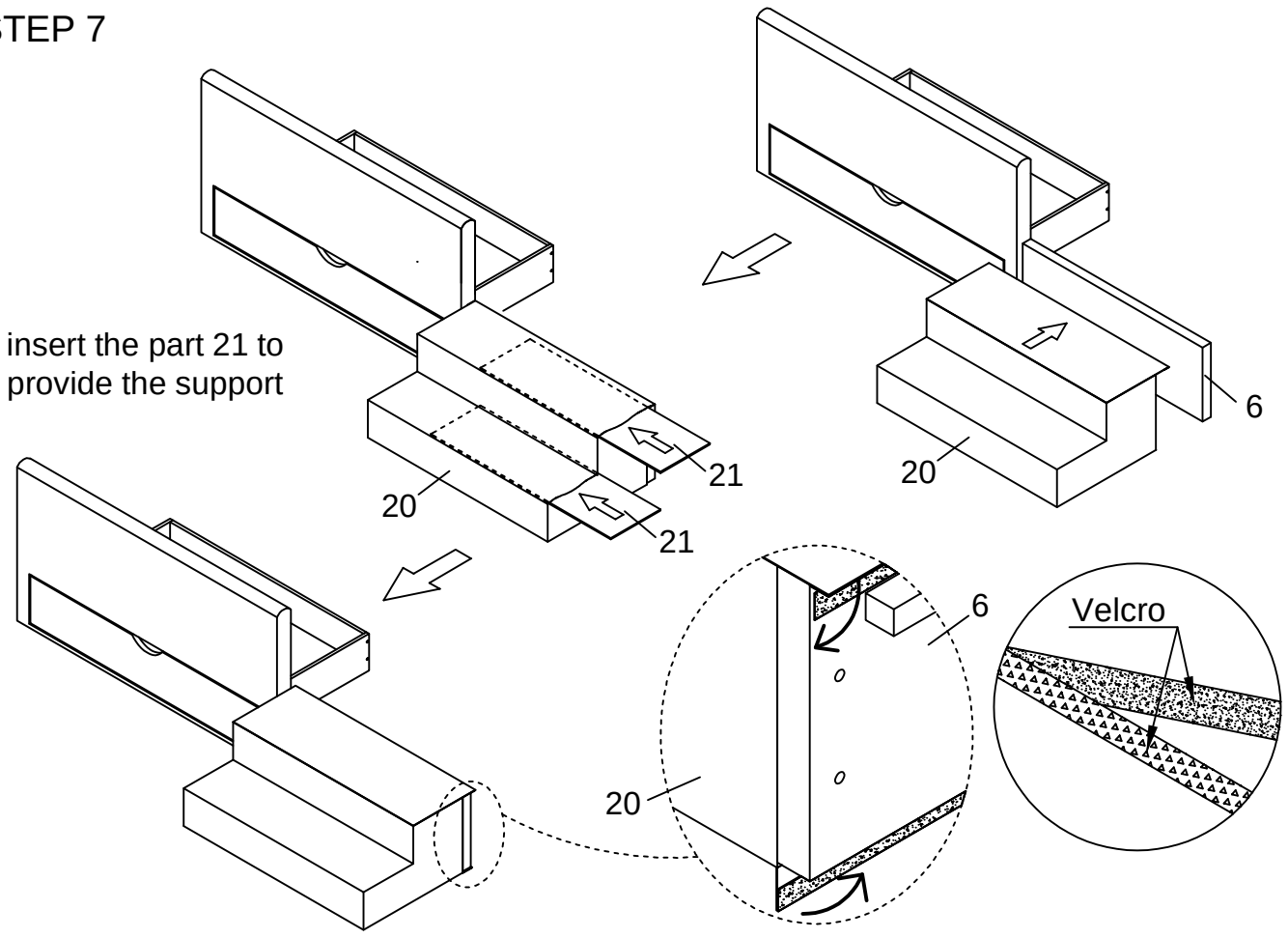

STEP 8

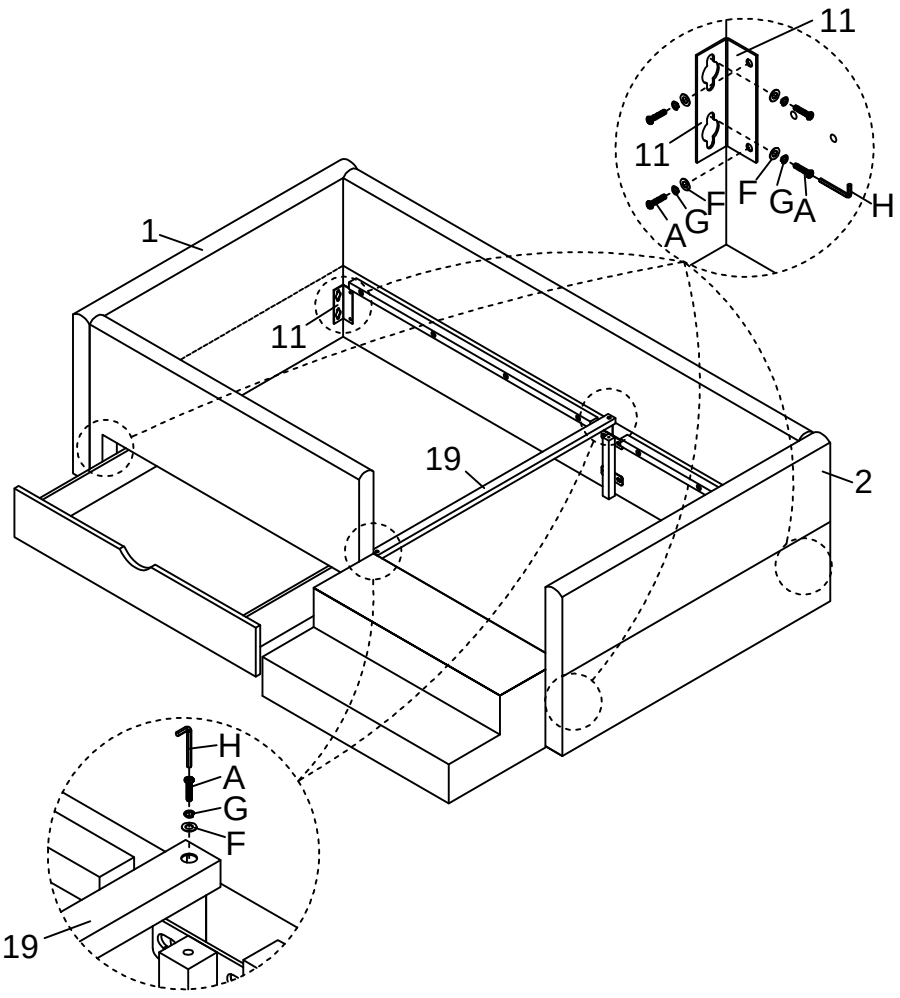

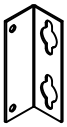

11x4PCS

	A x 18PCS
	F x 18PCS
	G x 18PCS
	H x 1PC

STEP 9

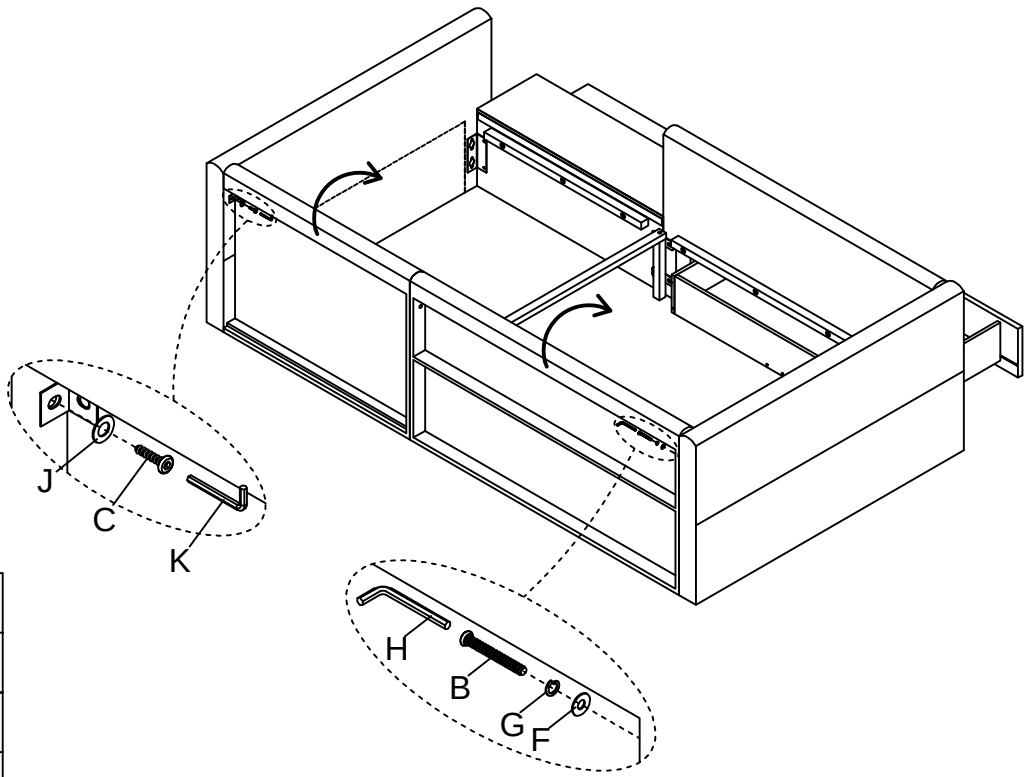

	B x 1PC
	C x 1PC
	F x 1PC
	G x 1PC
	H x 1PC
	J x 1PC
	K x 1PC

STEP 10

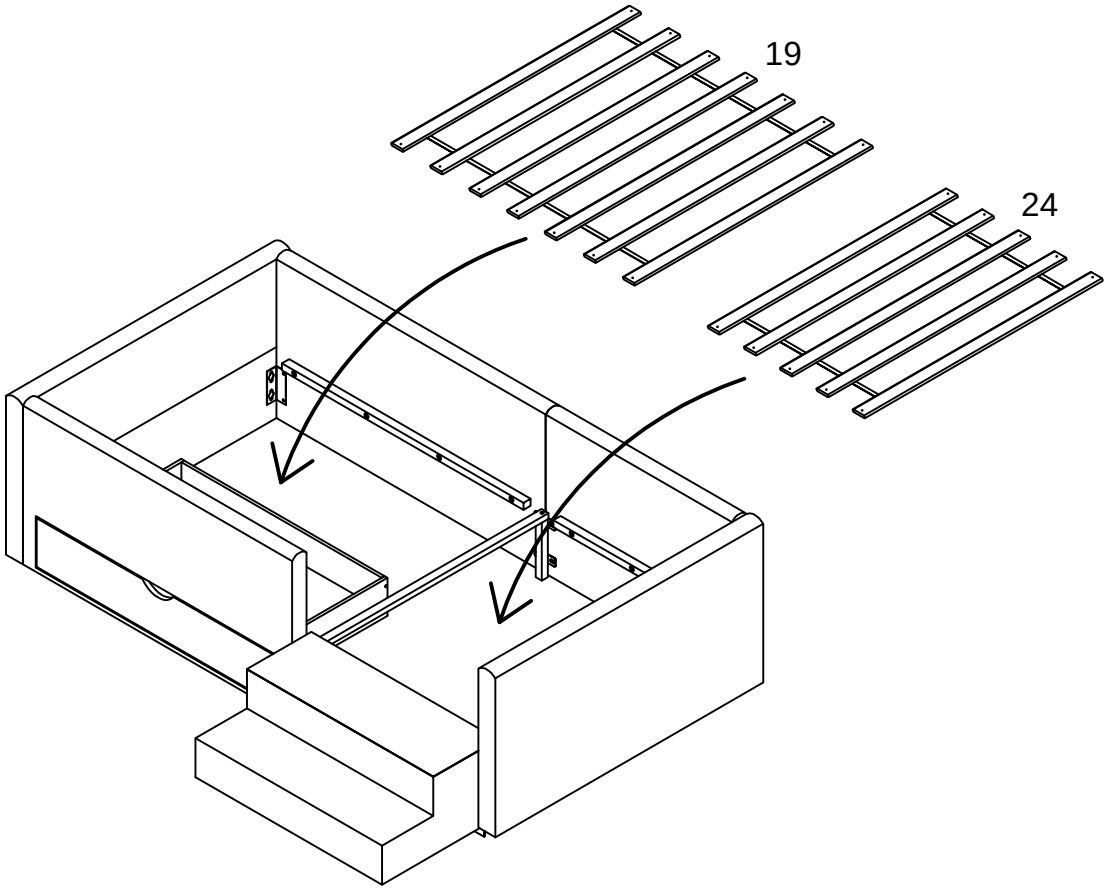

STEP 11

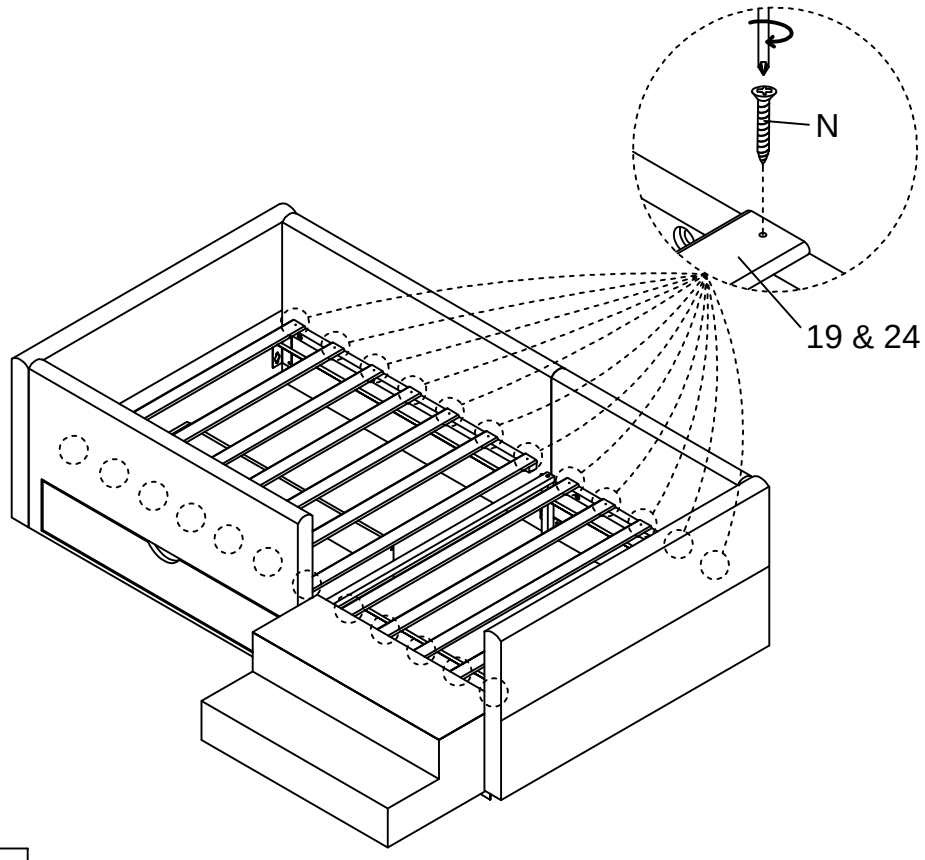

	N x 24PCS
	P x 1PC