Assembly Instructions

Caution : You must read this before you proceed

Care & Maintenance

⊘ 	• Not for commercial use. For residential use only.
√ 	• Furniture may scratch floors. We recommend using furniture pads to protect your floors.
⊘ 	• Do not put hot items directly on furniture surface.
⊘ 	• Do not clean furniture with harsh cleansers or polish.
⊘ 	• Do not place furniture under direct sunlight.
⊘ 	• Do not place furniture near heating or cooling vents.
⊘ 	• Do not write on furniture without a padded barrier to protect the surface.
⊘ 	• Do not place furniture outside . For indoor use only.
⊘ 	• Stains may be removed with mild soap solution and damp cloth.
⊘ 	• Children should not climb or jump on the furniture.
√ 	• Dust and pick-up spills using a clean, non-colored, lint-free cloth.

Please look in cardboard box for hardware packs and legs.

Recliner

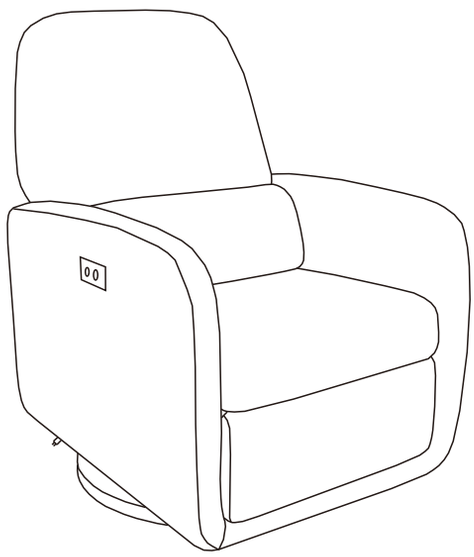

Parts List

Label	Picture	Description	QTY
A		Pillow	1
B	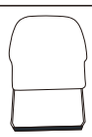	Seat backrest	1
C	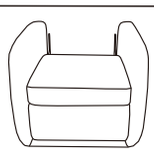	Chair base	1
D		POWER SUPPLY	1
E	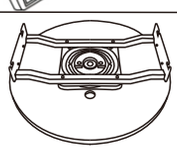	Swivel base	1

Hard ware

①	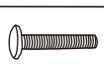	screws M8*45mm	8
②		wrench	1

Assembly Steps

Before Beginning Assembly:

A



B

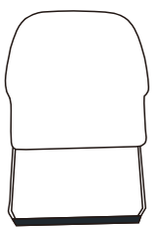

C

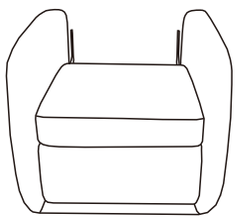

D



E

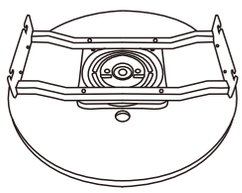

- Read instructions, cover to cover-
- Have 2 adults on hand for assembly-
- Do not assemble on flooring or carpet-
- Assemble on a clean non-marring surface (packing foam)-
- Save all packaging until finished

Assembly Steps

Overview

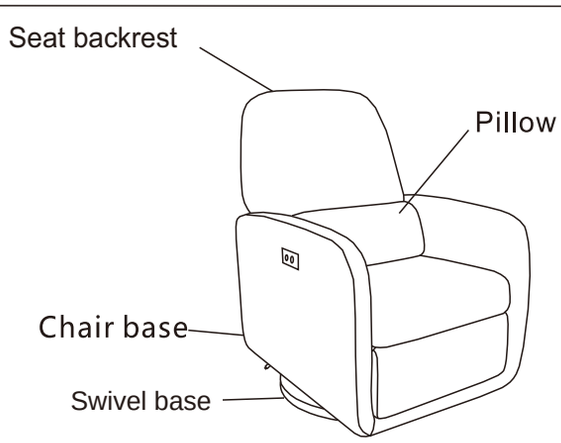

This recliner has multiple parts and may require upto 10 minutes to assemble.

To give you an overviewof the recliner parts, the above picture is to help youput the various parts into perspective.

Please readthrough the instructions below to familiariseyourself with the parts and steps before assembly

Step 1

Align screw ① with the holes and tighten to 30%.

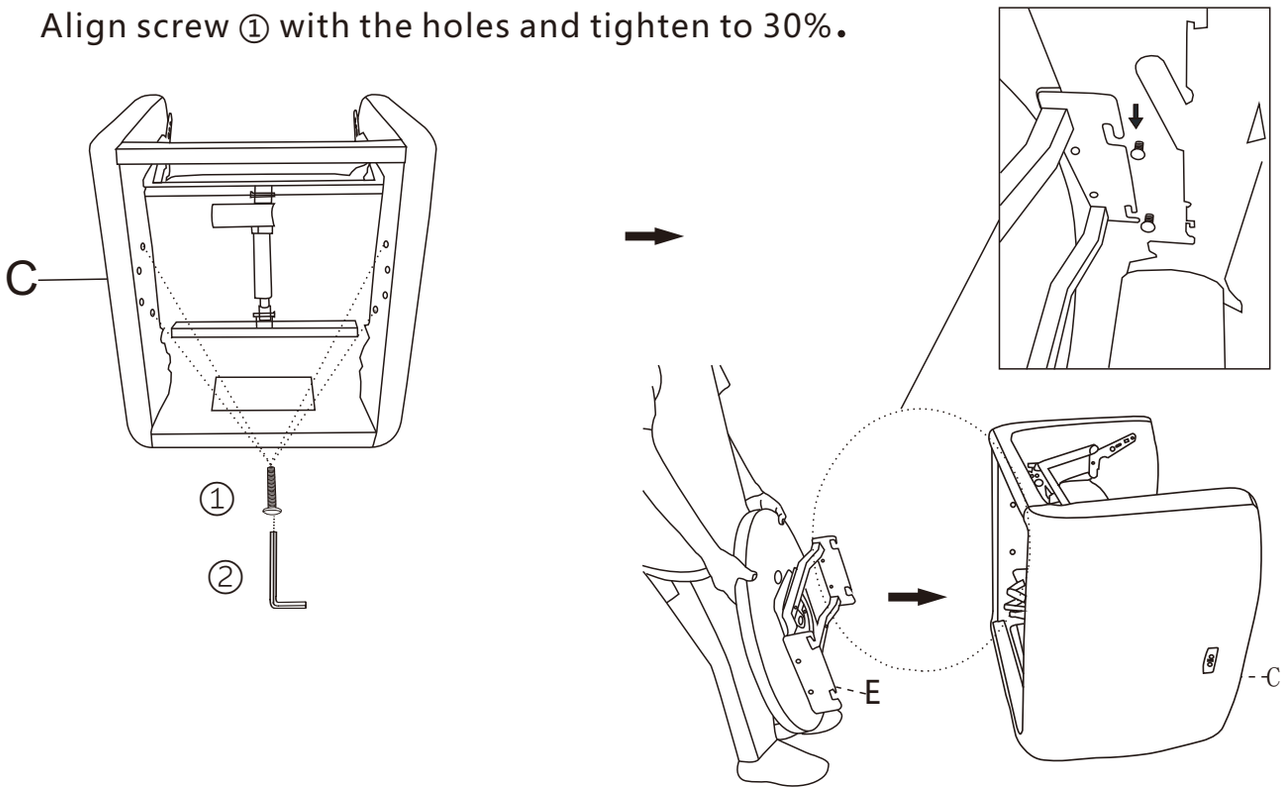

Hang the "E" Swivel Base onto the pre-installed screws as shown

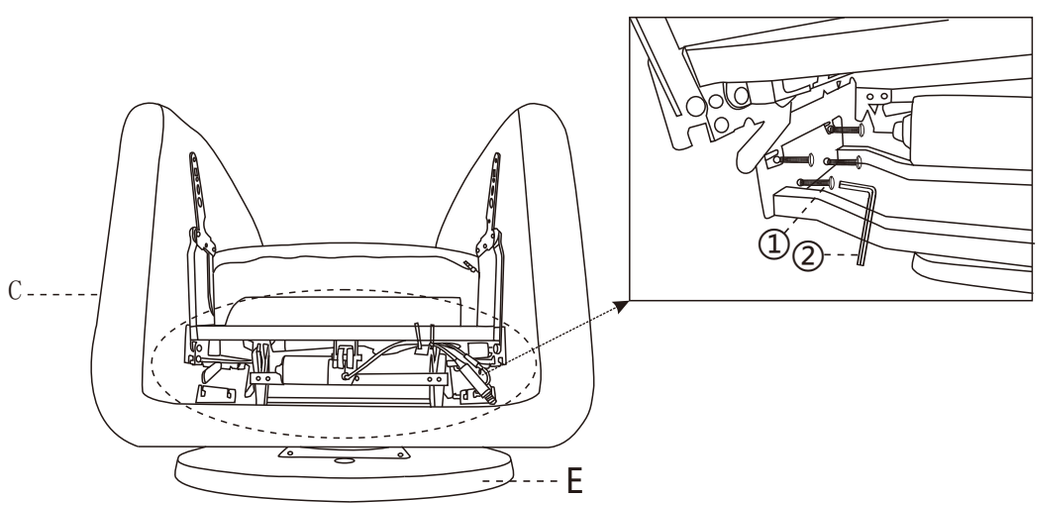

Install all remaining screw ①,

then fully tighten them with Wrench ② to 100% torque as shown.

1.Align screw ① with the holes and tighten to 30%.

2.Hang the "E" Swivel Base onto the pre-installed screws as shown

3.Install all remaining screw ①,
then fully tighten them with Wrench ② to 100% torque as shown.

Step 2

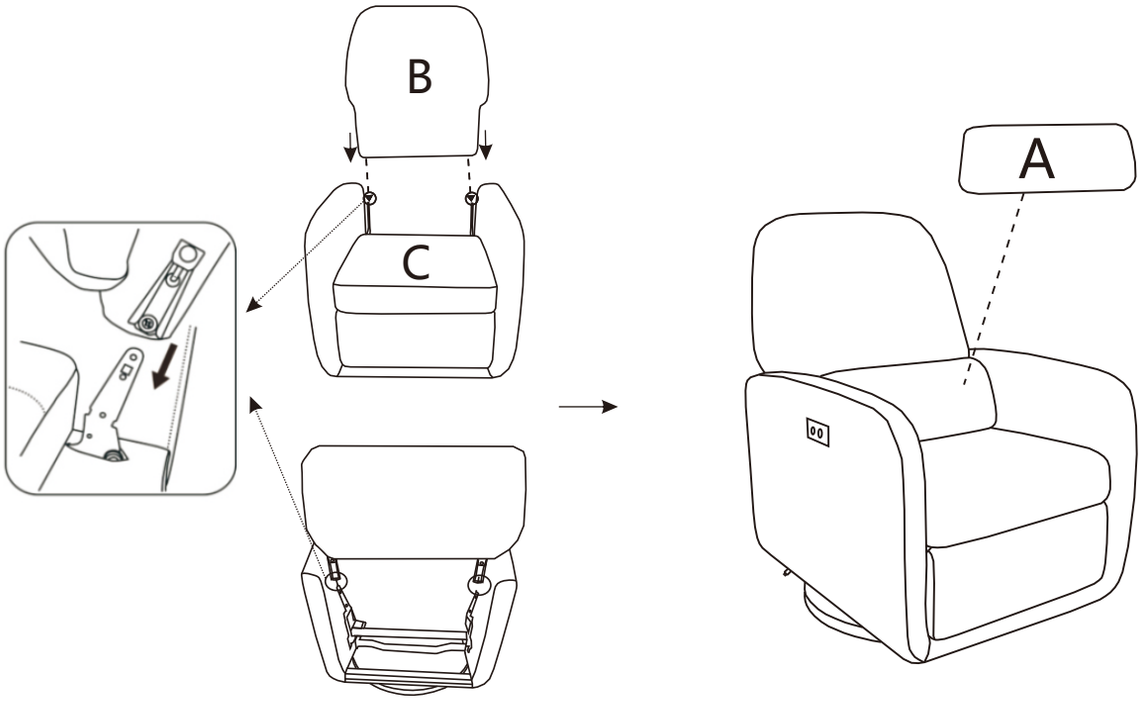

1. Assemble the Seat backrest(B) to the Chair base(C), as shown in the picture.
2.Place the pillow(A) on the backrest, as shown in the picture.

Step 3

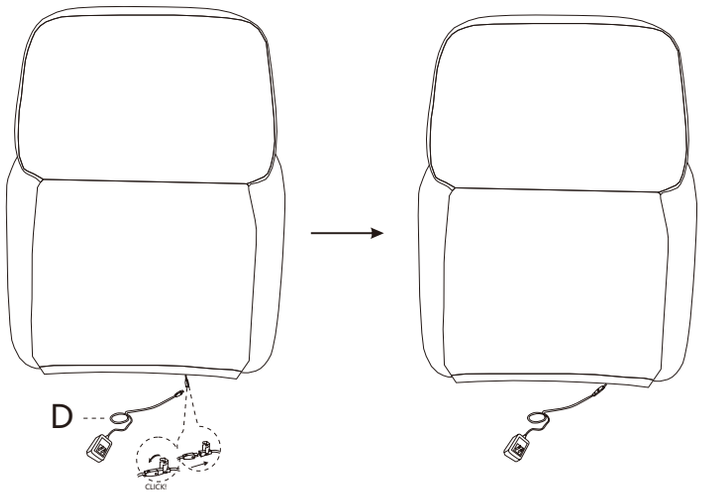

Connect the power cord and plug in the power supply(D).

Step 4

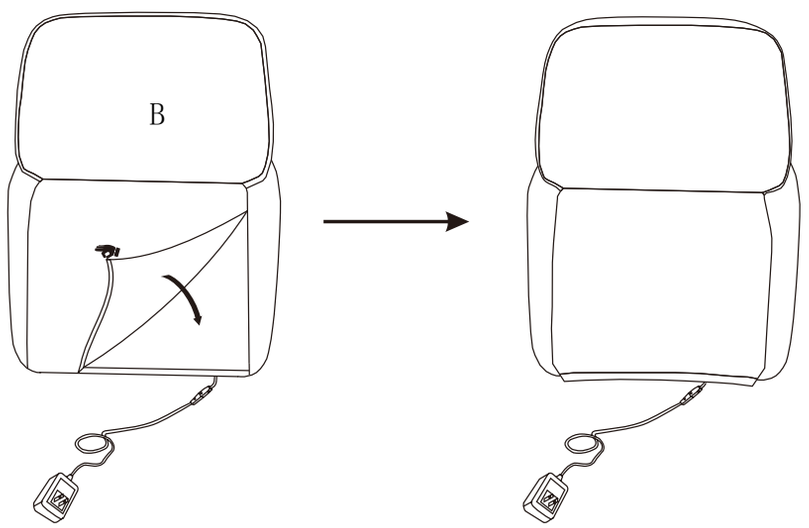

Smooth down the fabric flap on the Seat backrest(B).Run your hands down both sides of the flap,from top to bottom,allowing the magic tape to adhere to the flap under the seat of the chair.

Step 5

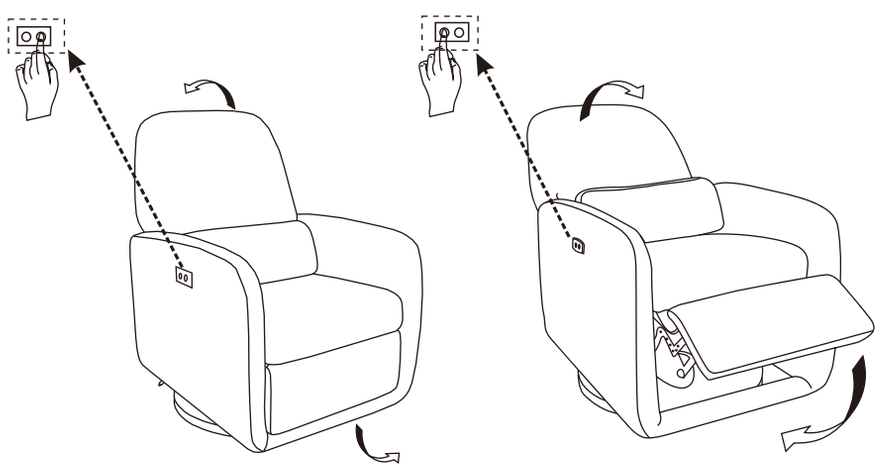

Your Recliner is ready for use. This Recliner can only be used on a flat,level surface.

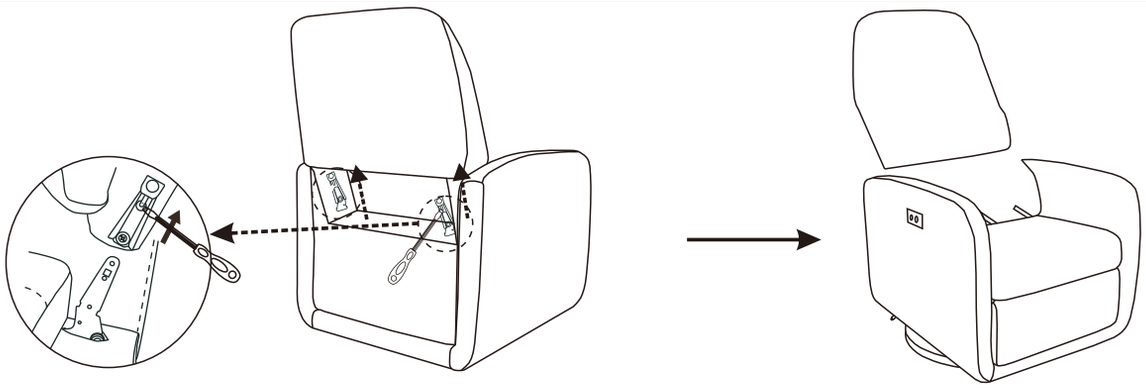

Disassembly Note:Open the flap on the Seat backrest(B). Use a screwdriver (do not use fingers) to press outward on the locking mechanism on one side of the chair base (C). Have an adult helper hold the chair base (C) steady, then pull the Seat backrest (B) upward at the same time. Repeat the step on the other side. The Seat backrest (B) can then be removed.

Warning!!

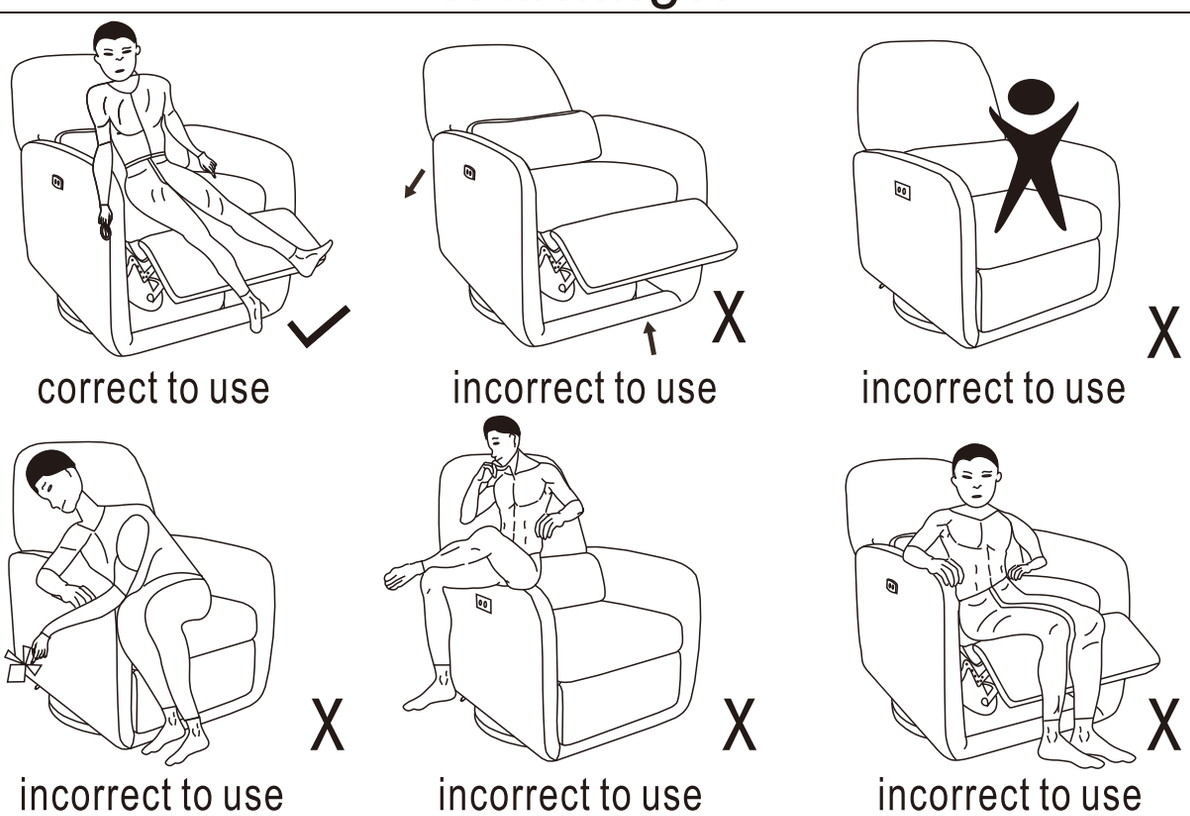

mechanism and any gaps. Do not allow children to play on the chair. Do not lean to side to pick up anything while sitting on the chair. Do not sit on the arms. Do not stand up when the recliner open. Only the occupant should operate the chair.

User Instructions.

Please read the Instruction Manual below carefully before use.

This is a ReclinerChair.At anything in a reclined seat position or in the upright position.You may enjoy the rocking motion by using your body weight in a back-front rocking motion,and swivel motion as well.

This is a ReclinerChair.At anything in a reclined seat position or in the upright position.You may enjoy the rocking motion by using your body weight in a back–front rocking motion,and swivel motion as well.

Supervise children,when in use of this Recliner.

To get into the Recline position:

Sit in your seat.
Press and hold the open button on the outside of the right armrest.Enter a fully tilted position.



Button control can stay and tilt at any position.

Press and hold the close button on the outside of the right armrest. As the footrest slowly retracts, the backrest will also slowly return to its upright position.
Where necessary,use your arms help lift/push yourself out If the seat.



Questions & Answers about Proposition 65

• What is Proposition 65?

Proposition 65 requires businesses to provide warnings to Californians about significant exposures to chemicals that cause cancer, birth defects or other reproductive harm. These chemicals can be in the products that Californians purchase, in their homes or workplaces, or that are released into the environment. By requiring that this information be provided, Proposition 65 enables Californians to make informed decisions about their exposures to these chemicals.Proposition 65 also prohibits California businesses from knowingly discharging significant amounts of listed chemicals into sources of drinking water.Proposition 65 requires California to publish a list of chemicals known to cause cancer, birth defects or other reproductive harm. This list, which must be updated at least once a year, has grown to include approximately 900 chemicals since it was first published in 1987.• What types of chemicals are on the Proposition 65 list?The list contains a wide range of naturally occurring and synthetic chemicals that include additives or ingredients in pesticides, common household products, food, drugs, dyes, or solvents. Listed chemicals may also be used in manufacturing and construction, or they may be byproducts of chemical processes, such as motor vehicle exhaust.

• What does a warning mean?

If a warning is placed on a product label or posted or distributed at a workplace, a business, or in rental housing, the business issuing the warning is aware or believes that it is exposing individuals to one or more listed chemicals.By law, a warning must be given for listed chemicals unless the exposure is low enough to pose no significant risk of cancer or is significantly below levels observed to cause birth defects or other reproductive harm.• Where can I get more information on Proposition 65?If you have specific questions on the administration or implementation of Proposition 65, you can contact OEHHA's Proposition 65 program at P65.Questions@oehha.ca.gov, or by phone at (916) 445-6900.