Assembly Instructions

Caution: You should read this before proceeding

Chair

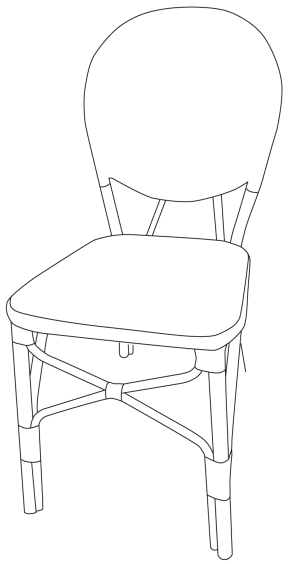

Parts List

Label	Picture	Description	QTY
A	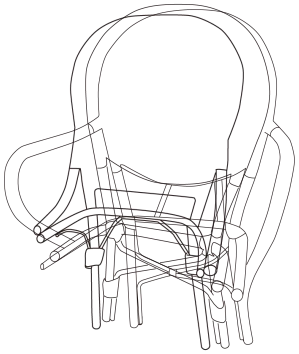	Backrest/Leg	1
B	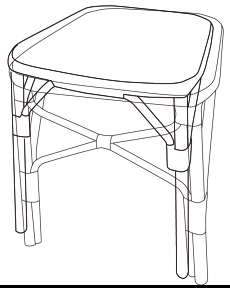	Seat/Leg	1

Hardware

Label	Picture	Description	QTY
①		Washer(M6)	4
②	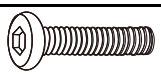	Bolt (M6*45mm)	4
③	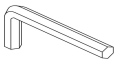	Allen Wrench（M6）	1

Assembly Preparation

Before Beginning Assembly:

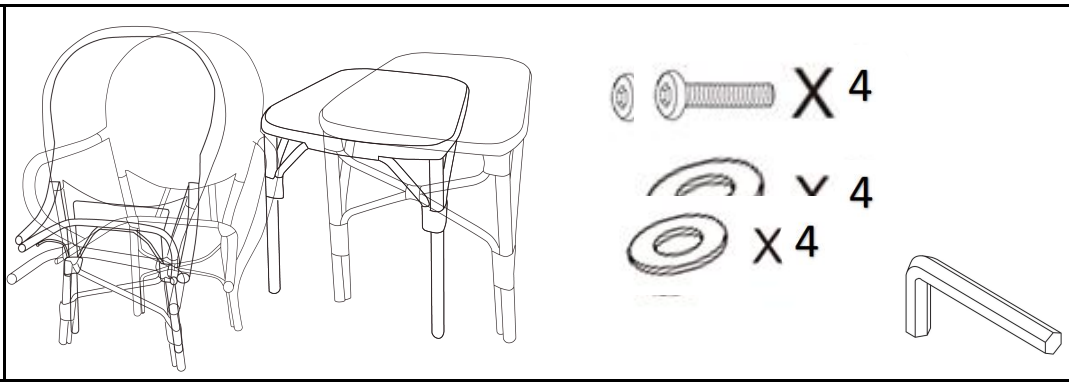

- Read instructions, cover to cover-
- Have 2 adults on hand for assembly-
- Do not assemble on flooring or carpet-
- Assemble on a clean non-marring surface (packing foam)-
- Save all packaging until finished-

Assembly Steps

Overview

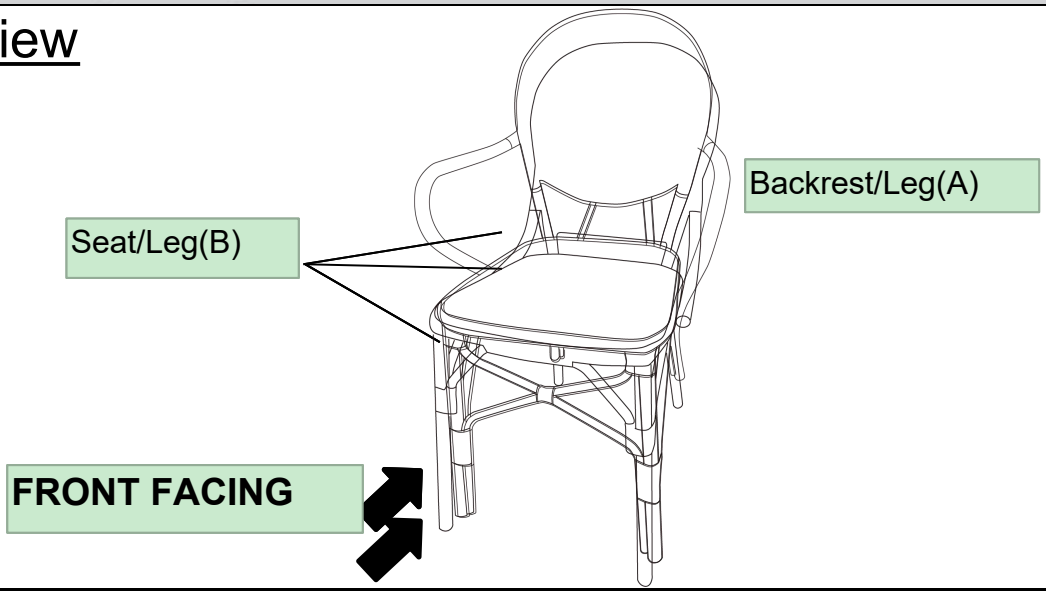

This Chair has multiple parts and may require up to 30 minutes to assemble. To give you an overview of the Chair parts, the above picture is provided to help you put the various parts into perspective. Please read through the instructions below to familiarise yourself with the parts and steps before assembly.

Step 1

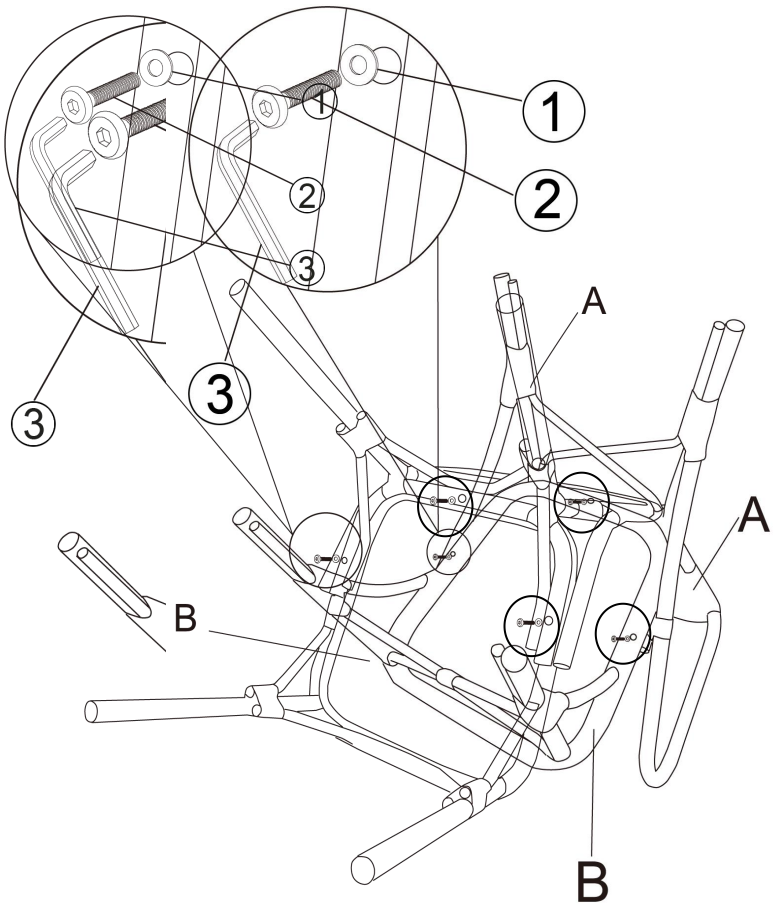

Open the carton and place all the parts onto a clean, non-marring surface.
Attach the Seat/Leg(B) to the Backrest/Leg(A) with the Washers(①) and Bolts(②) using the Allen Wrench(③) as shown above.
Do not fully tighten any Bolt at this time. Lock tightly at the end.

Step 2

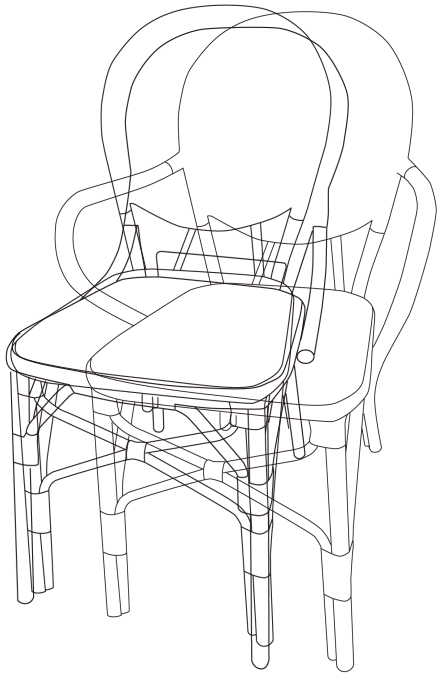

Stand the Chair up.
Place the Chair on a **LEVEL SURFACE.**
Inspect it and make sure all parts are adequately connected.
Gently and carefully, sit on the Chair.
This will help align all parts at all joints.
Then get off the Chair, and in a sequential manner, proceed to tighten all Bolts.
When tightening the Bolts, tighten sequentially.
DO NOT tighten any Bolt fully and then move on to the next one. This may cause the frame to warp. If the chair wobbles after tightening, loosen the Bolts and execute the same process.
If the Chair is not stable it could lead to damage of the product.
Your Chair is ready for use.
This Chair can only be used on a flat and level surface.

Care &Maintenance

- Do not put hot items directly on furniture surface
- Do not clean furniture with harsh cleansers or polish.
- To obtain the longest lifespan of your outdoor prodcts, minimizing exposure to direct sunlight is recommended.
- Children should not climb or jump on the furniture.
- Do not write on furniture without a padded barrier to protect the surface.
- To obtain the longest lifespan of your outdoor products, avoid extended and lengthy exposure to rain, snow, and direct sunshine. Whenever possible cover the product and /or place under patio or awnings.
- Not for commercial use. For residential use only .
- Stains may be removed with mild soap solution and damp cloth.
- Keep away from sources of ignition.

- Dust and pick-up spills using a clean, non-colored, lint-free cloth.

Assembly

Caution: You must reac

TA

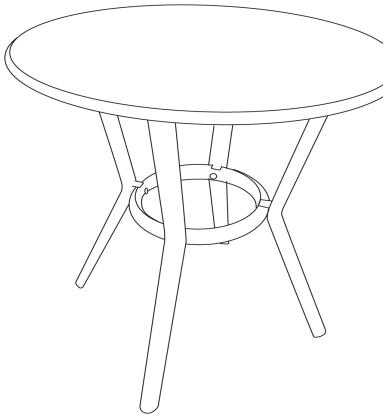

Parts List

Label	Picture
A	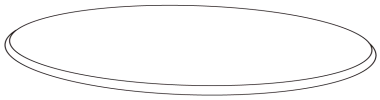
B	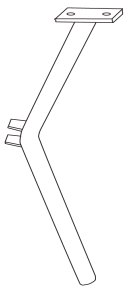

C	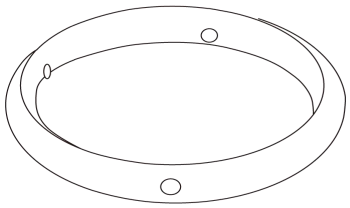

Hardware

Label	Picture
①	
②	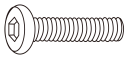
③	
④	

Assembly Preparation

Before Beginning Assembly:

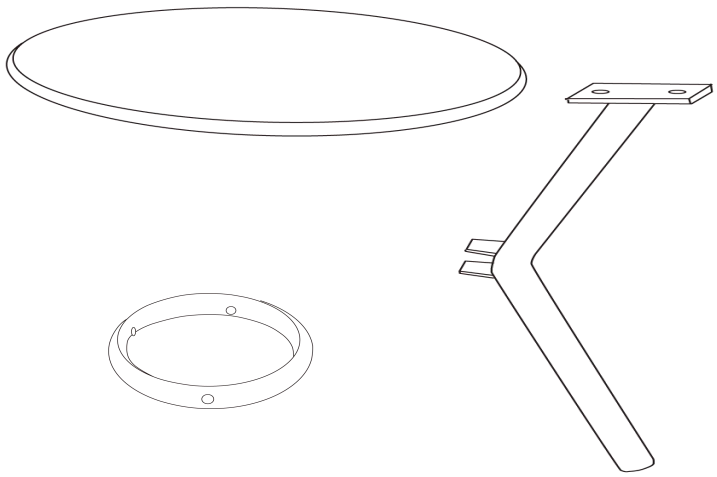

- Read instructions, cover to
- Have 2 adults on hand for as

- Do not assemble on flooring
- Assemble on a clean non-ma
- Save all packaging until finis

Assembly Steps

Overview

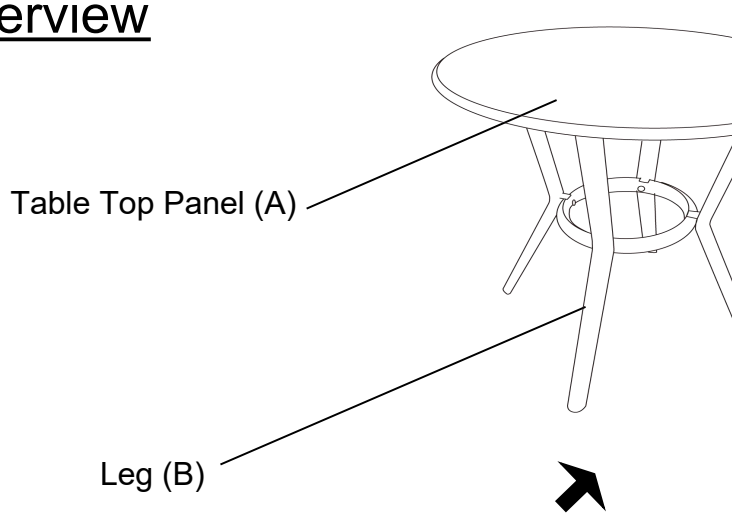

FRONT FACING

This Table has multiple parts and may require up
overview of the Table parts, the above picture is
Please read through the instructions below to far
assembly.

Step 1

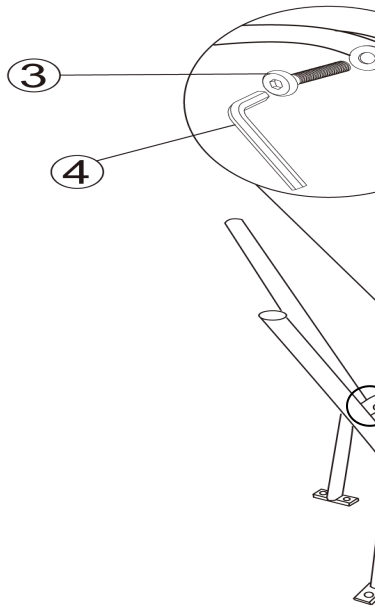

Place the Table Top(A) facedown on a clean nor
Attach one of the Legs(B) to the Circle (C) with tl
as shown above.
Repeat the same process to install the remaining
Do not fully tighten the Bolts.

Step 2

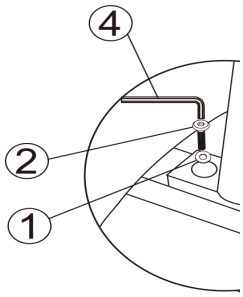

Attach one of the Legs(B) to the Table top (A) wi
Key(4) as shown above.
Repeat the same process to install the remaining
Do not fully tighten the Bolts.

Place the Table on a LEVEL SURFACE to check
If it wobbles, apply even steady pressure downw
This action should help align all parts.
Then proceed to tighten all Bolts at all joints
Do NOT fully tighten a Bolt in one go and then m
Rather, in a sequential manner, gradually tighten
evenly secured.
This methodology will ensure maximum evennes
tightened.
Your Table is ready for use.
This Table can only be used on a flat, level su

Care & Maintenance

- Do not put hot items directly on furnit
- Do not clean furniture with harsh clea
- To obtain the longest lifespan of your direct sunlight is recommended.
- Children should not climb or jump on
- Do not write on furniture without a pa
- To obtain the longest lifespan of your lengthy exposure to rain, snow, and d the product and /or place under patio
- Not for commercial use. For residentia
- Stains may be removed with mild soa
- Keep away from sources of ignition.

- Dust and pick-up spills using a clean,

Instructions

Hogan 2020.10.20

d this before you proceed

BLE

Description	QTY
Table Top	1
Leg	4

Cycle	1

Description	QTY
Washer（M6）	14
Bolt (M6*18MM)	9
Bolt (M6*30MM)	5
Allen Wrench(M6)	1

首字母大写，其它小写（我已改）

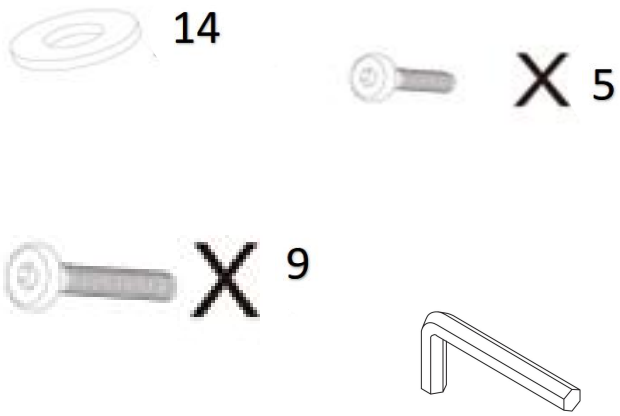

这里是跟上面的列表都不上（我已改）

cover-

ssembly-

ı or carpet-

arring surface (packing foam)-

shed-

› to 30 minutes to assemble. To give you an
to help you put the various parts into perspective.
niliarise yourself with the parts and steps before

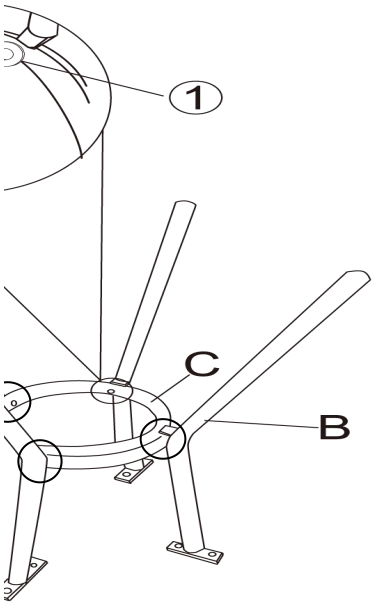

我加了三个圈（请保持）

ı-marring surface.
ıe Bolts(3) and washers (1) using the Allen Key(4)

ɡ Legs (B).

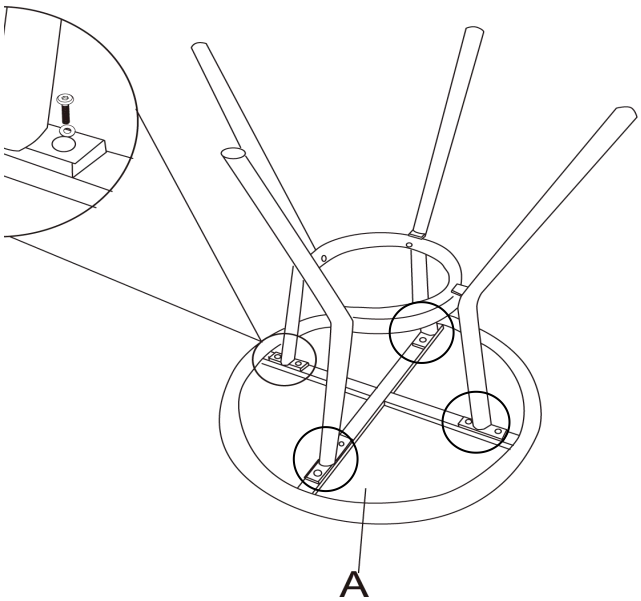

我加了三个圈（请保持）

th the Bolts(2) and washers (1) using the Allen

g Legs (B).

t for wobbles.
ards on the Table.

ove on to the next one.
each Bolt until all Bolts are

s once all Bolts are fully

rface.

ture surface

ansers or polish.

r outdoor prodcts, minimizing exposure to

the furniture.

added barrier to protect the surface.

outdoor products, avoid extended and
direct sunshine. Whenever possible cover
or awnings.

al use only .

ıp solution and damp cloth.

ı, non-colored, lint-free cloth.