RTA-B002 PRODUCT DIMENSIONS

GENERAL DIMENSIONS:
WIDTH: 21.25”
DEPTH: 15.75”
HEIGHT: 31.25~46”
NET WEIGHT: 25 Lbs.
SHIPS IN 1 BOX.

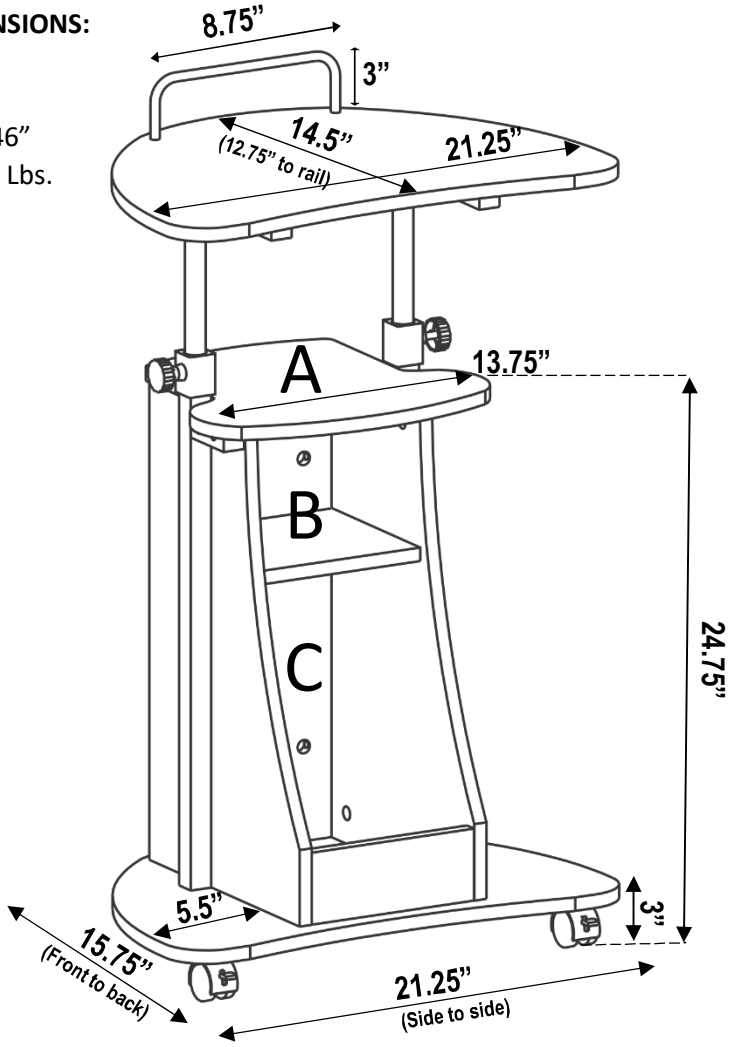

MINIMUM HEIGHTS:
(Tabletop at lowest height)

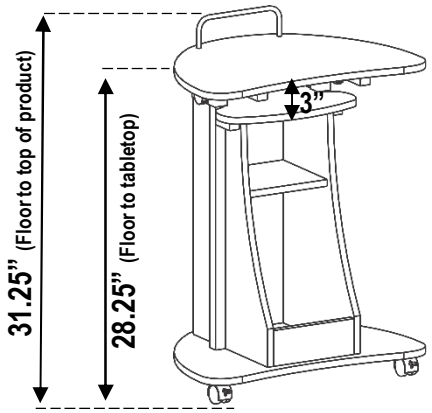

MAXIMUM HEIGHTS:
(Tabletop at highest recommended height)

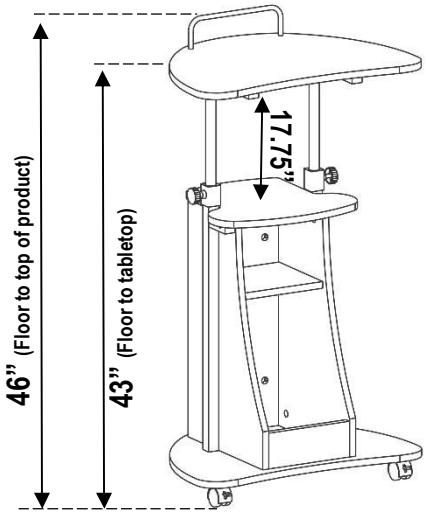

SHELVES/STORAGE INTERNAL MEASUREMENTS:
SHELF(A): 9”W x 12.5”D x 3”H (min)~ 17.75”H (max)
STORAGE (B): 7.75”W x 7.5”D x 6.25”H
STORAGE (C): 7.75”W x 11.25”D x 13.75”H
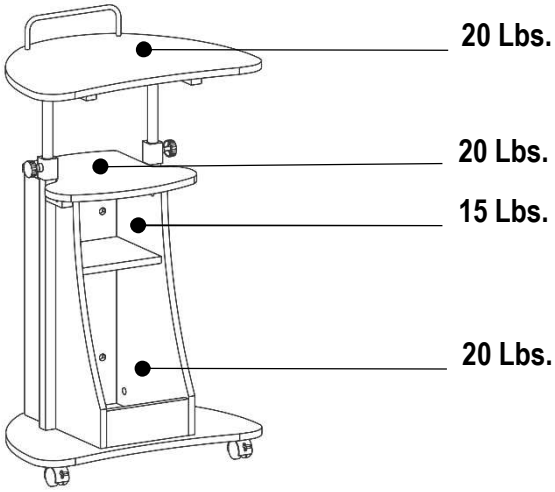
MAXIMUM WEIGHT CAPACITIES
(DO NOT EXCEED THESE LIMITS)