Instructions

Storage Cabinets Type Q

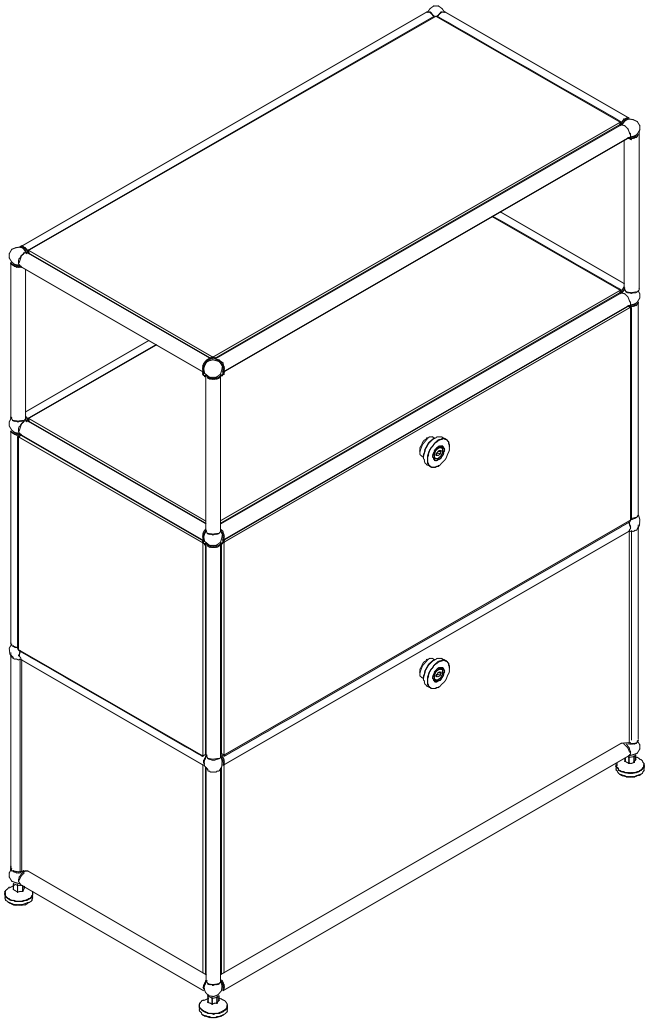

Part List

①	②	③	⑥	⑧			
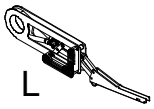	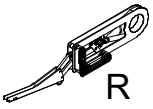	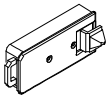					
x2	x2	x2	M3x28 x4	M4x14 x4			

A	B	C	E1	E2	E3	F	W
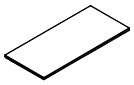	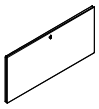	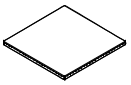	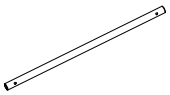				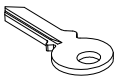
x6	x2	x4	732MM x8	332MM x16	232MM x4	x2	x2

H1	H2	J1	J2	M	N	II	
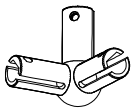	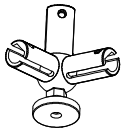	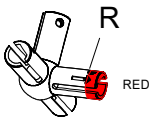	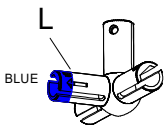				
x4	x4	x4	x4	x56	x1	x1	

Step1

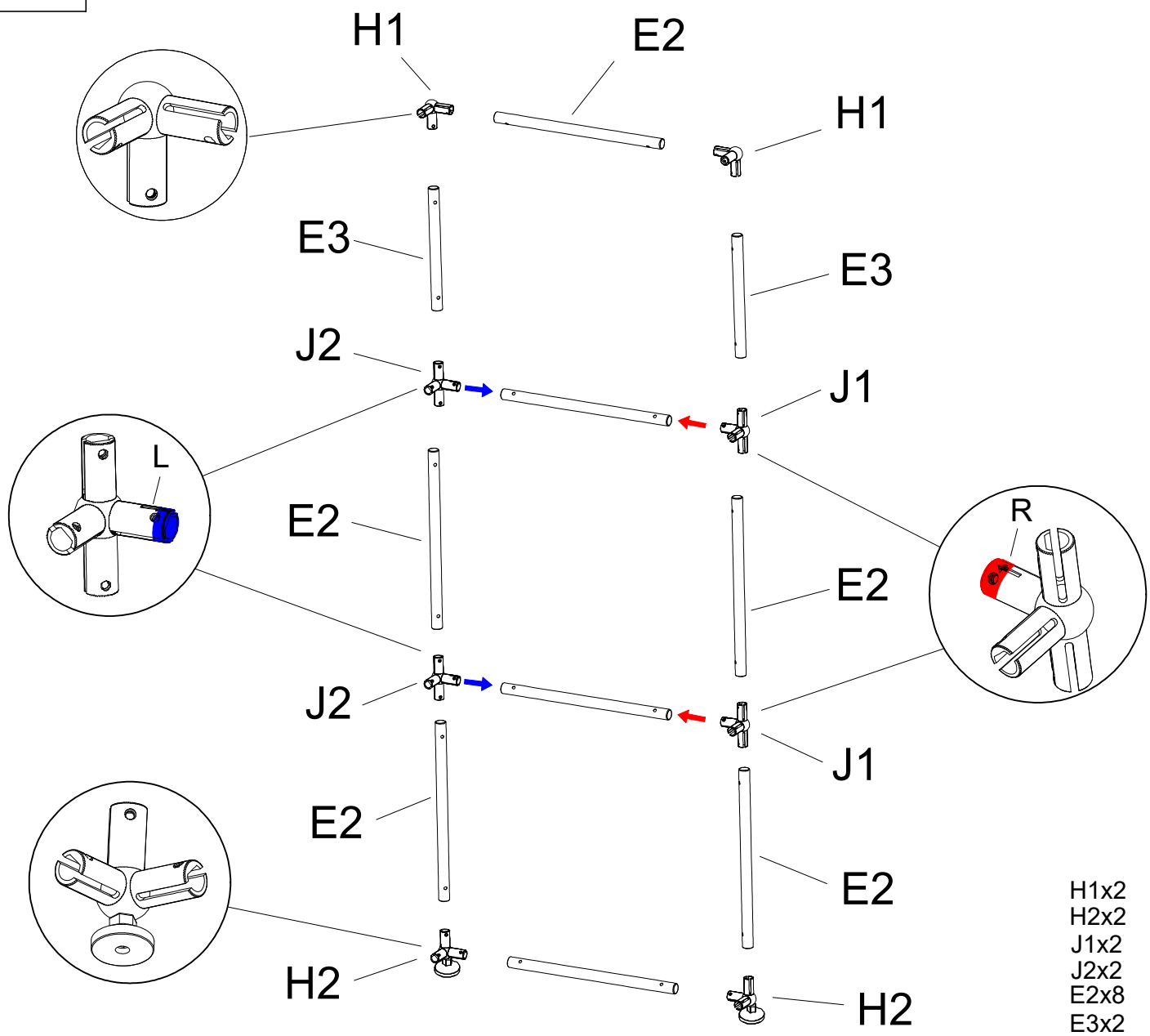

H1x2
H2x2
J1x2
J2x2
E2x8
E3x2

Step2

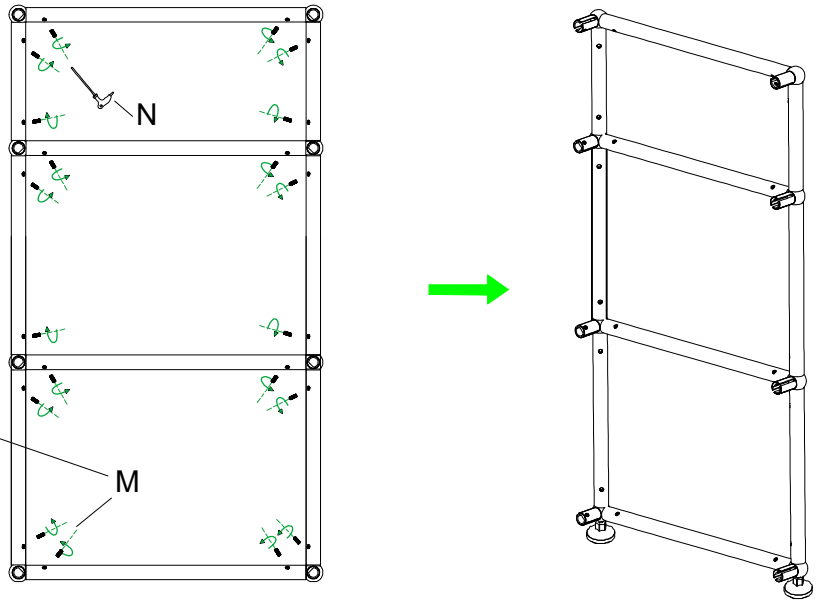

Do not tighten the M screws completely, otherwise it will not be possible to adjust the overall product later.

Mx20
Step2x2

Step3

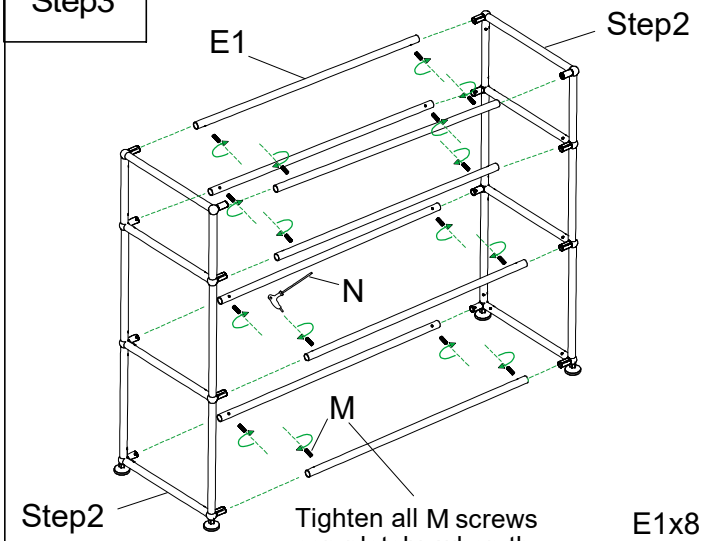

Tighten all M screws completely, when the cube frame is done.

E1x8
Mx16
Step2x2

Step4

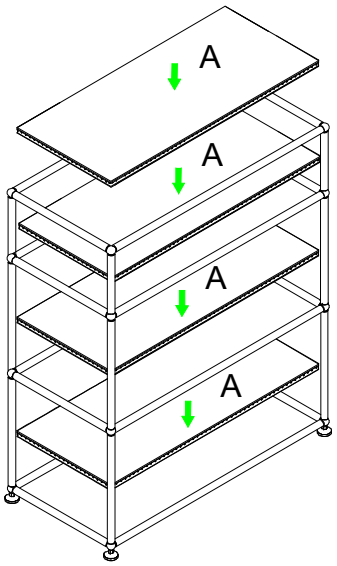

Ax4

Step5

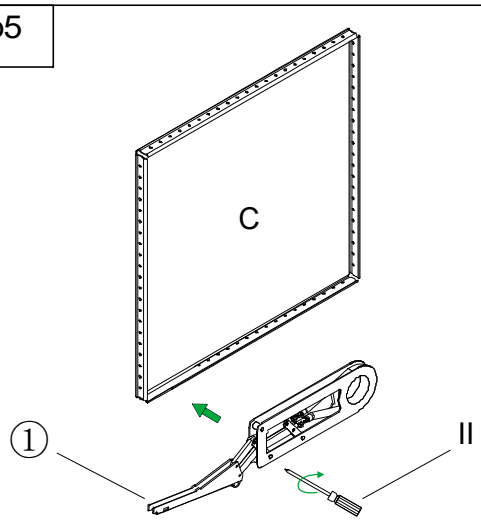

Partially unscrew the three screws in ① before installing it on the metal panel.

Cx1
①x1
Step5x2

Step6

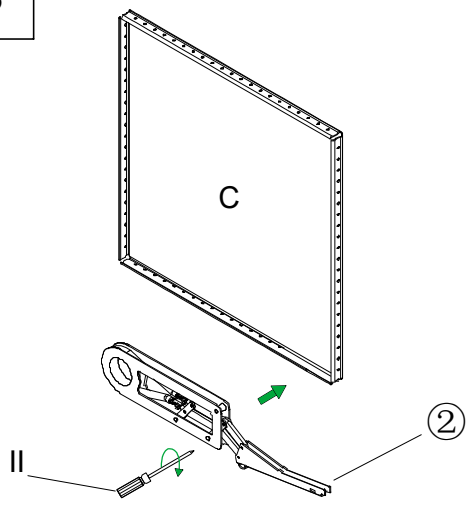

Partially unscrew the three screws in ② before installing it on the metal panel.

Cx1
②x1
Step6x2

Step7

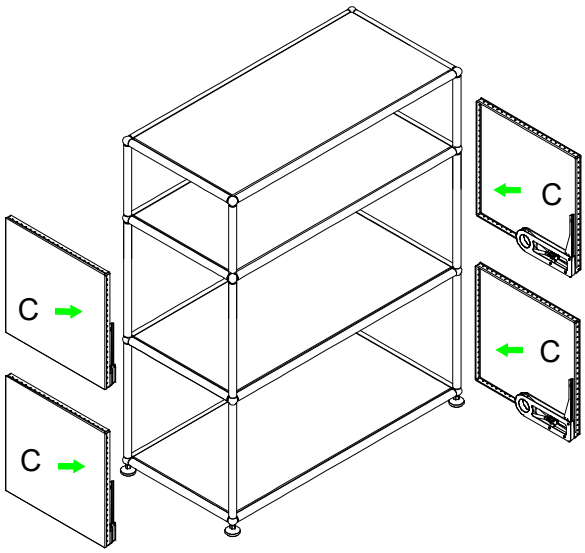

Step5x2
Step6x2

Step8

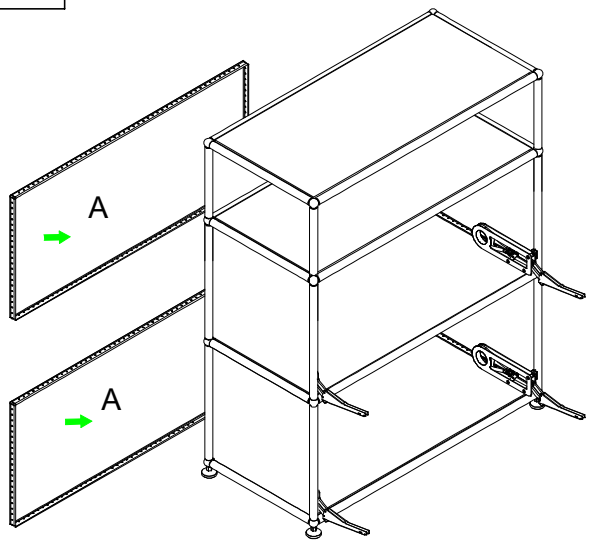

Ax2

Step9

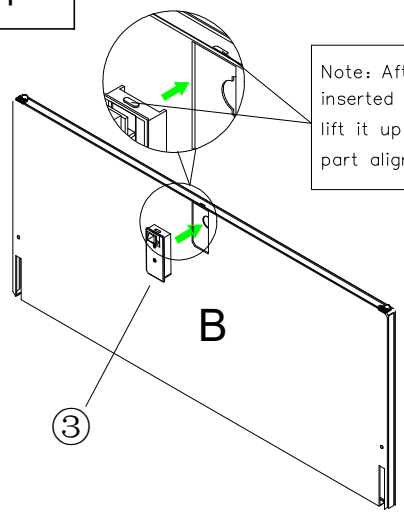

Bx1
③x1

Step10

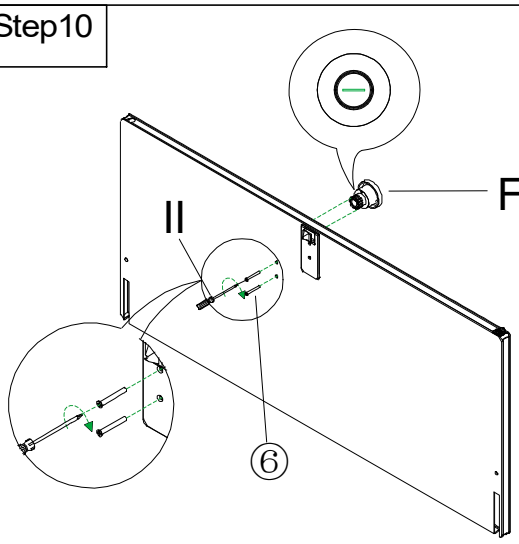

Fx1
⑥x2
Step10x2

Step11

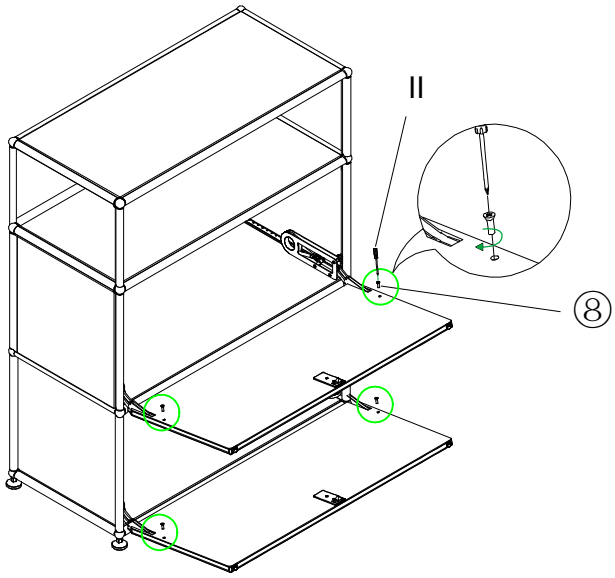

⑧x4

How to use the lock

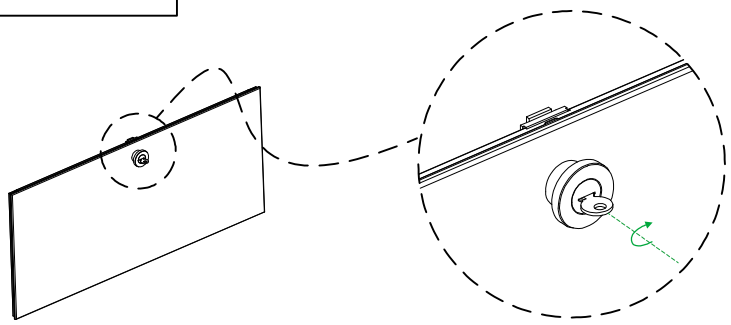

Turn clockwise to unlock

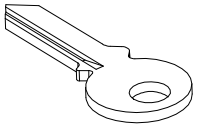

including 2 keys

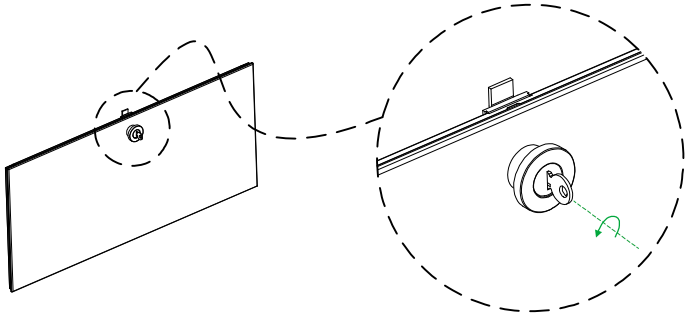

Turn counterclockwise to lock