ASSEMBLY INSTRUCTION

Sectional

Universal assembly of the sectionals

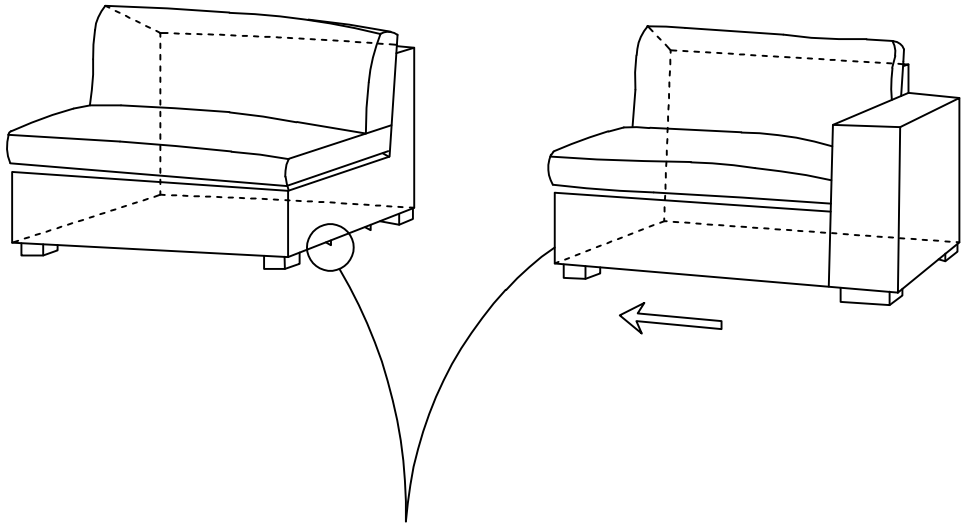

The prong and the connector must be aligned well.

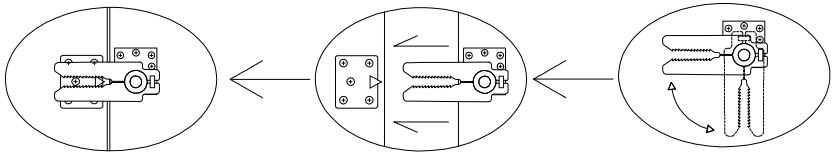

How to disconnect

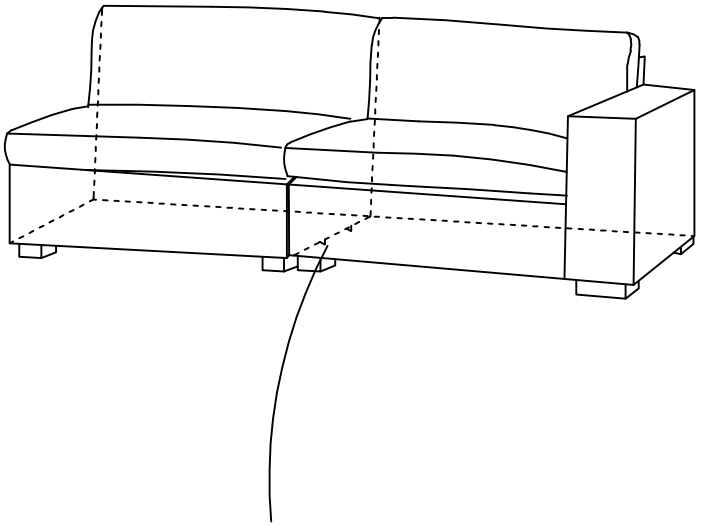
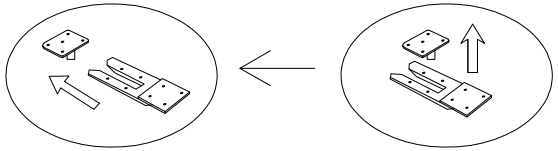
Lift up the right sectional and pull it out .